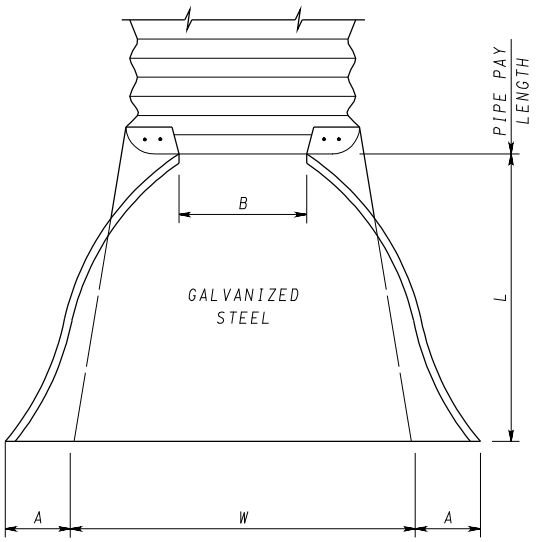

PLAN

DIMENSIONS								
PIPE DIA.	GA.	A 1″±	B MAX.	H 1″±	L 1½″±	W 2″±	APPROX. SLOPE	UNIT
12″	16	6″	6″	6″	21″	24″	2½	1 PC.
15″	16	7″	8″	6″	26″	30″	2½	1 PC.
18″	16	8″	10″	6″	31″	36″	2½	1 PC.
21″	16	9″	12″	6″	36″	42″	2½	1 PC.
24″	16	10″	13″	6″	41″	48″	2½	1 PC.
30″	14	12″	16″	8″	51″	60″	2½	1 PC.
36″	14	14″	19″	9″	60″	72″	2½	2 PC.

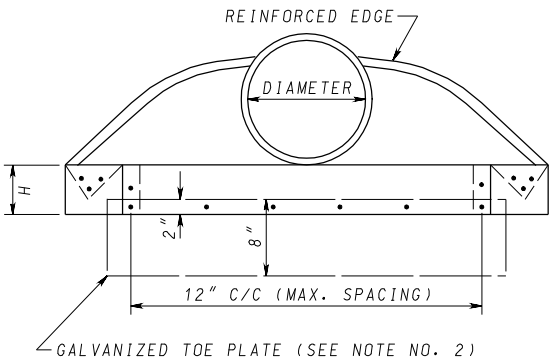

END VIEW

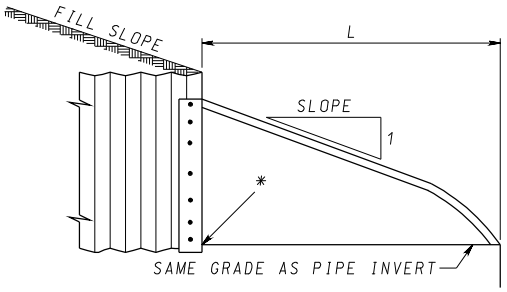

SIDE VIEW

* INVERT ELEVATION TO BE AT THE PIPE END OF THE STANDARD END SECTION. ELEVATIONS TO BE NOTED ON THE CONSTRUCTION PLANS.

NOTES

1. METAL END SECTIONS SHALL BE GAGE 16 FOR PIPES RANGING FROM 15″ THRU 24″, AND GAGE 14 FOR PIPES RANGING FROM 30″ THRU 36″ . MULTIPLE PANEL UNITS TO HAVE LAP SEAMS WHICH ARE TO BE TIGHTLY JOINED BY ⅜″ DIAMETER GALVANIZED RIVETS OR BOLTS.
2. TOE PLATES SHALL BE USED WHEN SPECIFIED ON THE PLANS. THICKNESS OF END PLATE TO BE SAME AS END SECTION. COST OF TOE PLATE TO BE INCIDENTAL TO THE BID PRICE PER EACH OF METAL END SECTION.

SPECIFICATION 303	CATEGORY CODE ITEMS
APPROVED	Kirk G. McClelland DIRECTOR – OFFICE OF HIGHWAY DEVELOPMENT

APPROVAL • SHA REVISIONS		APPROVAL • FEDERAL HIGHWAY ADMINISTRATION	
APPROVAL	8-28-86	APPROVAL	12-12-86
REVISED	10-1-01	REVISED	7-27-09
REVISED	7-1-09	REVISED	
REVISED		REVISED	

Maryland Department of Transportation
STATE HIGHWAY ADMINISTRATION

STANDARDS FOR HIGHWAYS AND INCIDENTAL STRUCTURES

STANDARD METAL END SECTION ROUND METAL PIPE

STANDARD NO. MD 370.01