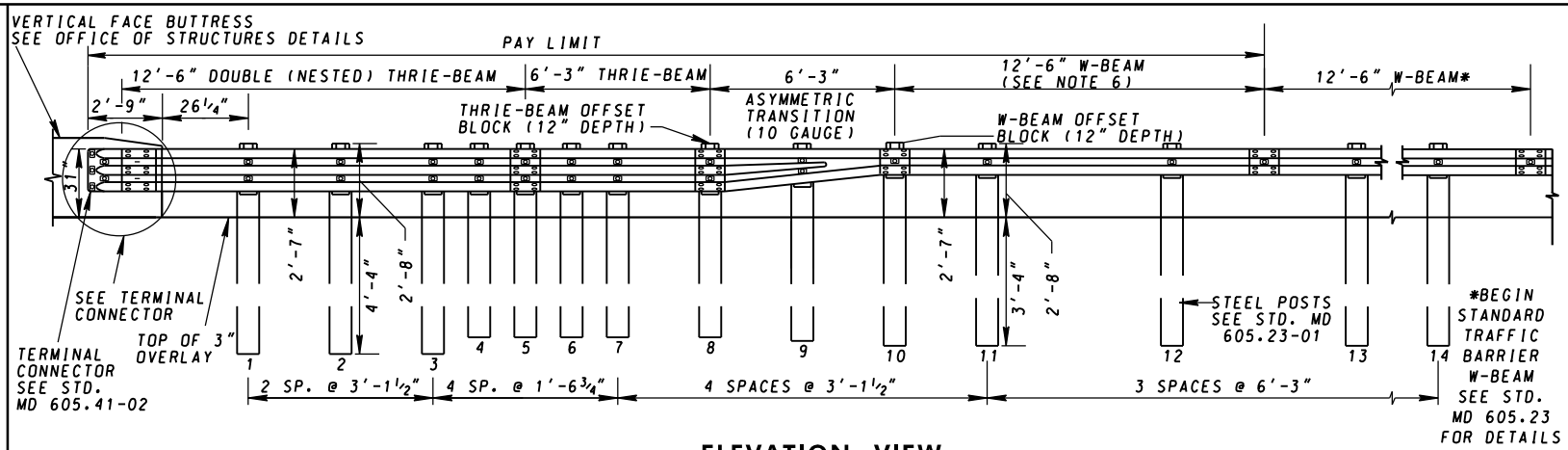

ELEVATION VIEW

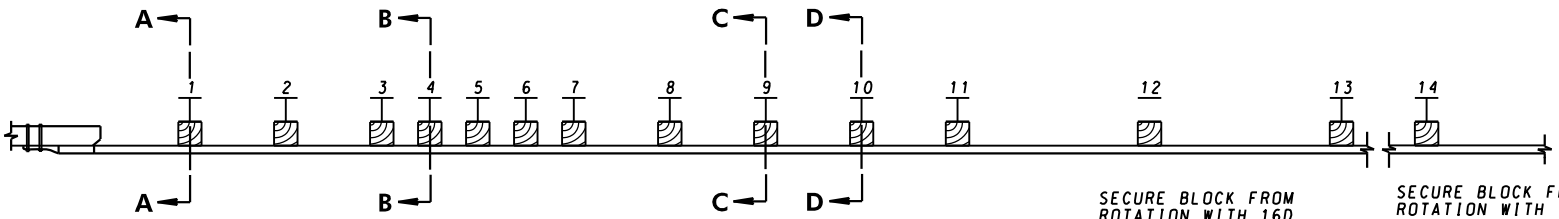

PLAN VIEW

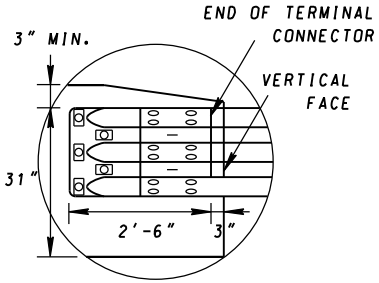

TERMINAL CONNECTOR

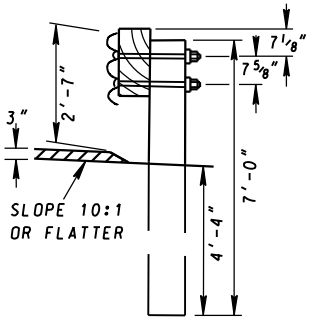

SECTION A–A

POSTS 1 TO 3
W6X15, 7'-0" LONG

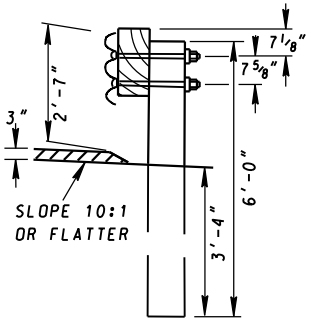

SECTION B–B

POSTS 4 TO 8
W6X8.5, 6'-0" LONG

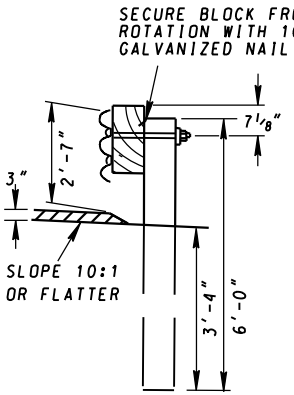

SECTION C–C

POST 9
W6X8.5, 6'-0" LONG

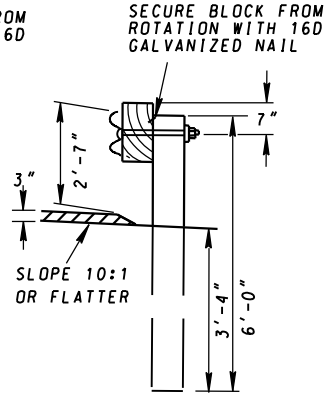

SECTION D–D

POSTS 10 AND BEYOND
W6X8.5, 6'-0" LONG

NOTES

1. ALL BLOCKOUTS TO BE EITHER 6"X12"X19" (THRIE-BEAM) OR 6"X12"x14" (W-BEAM).
2. THRIE-BEAM TERMINAL CONNECTOR, THRIE-BEAM SECTIONS, AND W-BEAM SECTIONS SHALL BE LAPPED IN THE DIRECTION OF TRAFFIC.
3. THE TRAFFIC BARRIER THRIE-BEAM ANCHORAGE AT BRIDGE END POSTS SHALL BE PLACED ON SLOPES 10:1 OR FLATTER.
4. FOR THRIE-BEAM DETAILS, INCLUDING STEEL POSTS, OFFSET BLOCKS, AND SPLICES, SEE STD. MD 605.29.
5. FOR TERMINAL CONNECTOR AND TRANSITION SECTION, SEE STD. MD 605.41-02.
6. A 4" CURB MAY BE ADDED BELOW THE TRAFFIC BARRIER THRIE-BEAM SYSTEM. IF A CURB IS USED, PLACE DOUBLE (NESTED) W-BEAM IN THIS SECTION.
7. FOR THIS OVERLAY STANDARD, AN ASYMMETRIC TRANSITION REPLACES THE SYMMETRIC TRANSITION AND THE ADJACENT W-BEAM IS RAISED 3" ON THE POSTS TO MAINTAIN A 31" TOP MOUNTING HEIGHT.
8. OVERLAY SHALL EXTEND LATERALLY AT LEAST TO THE FACE OF THE RAIL. OVERLAY SHALL NOT EXTEND BEYOND FACE OF POSTS.

SPECIFICATION 605 | CATEGORY CODE ITEMS

APPROVED

DIRECTOR - OFFICE OF HIGHWAY DEVELOPMENT

APPROVAL	SHA	APPROVAL	FEDERAL
REVISIONS		HIGHWAY ADMINISTRATION	
APPROVAL	2-25-20	APPROVAL	2-24-20
REVISED	3-16-22	REVISED	2-24-22
REVISED		REVISED	
REVISED		REVISED	

MDOT MARYLAND DEPARTMENT OF TRANSPORTATION
STATE HIGHWAY ADMINISTRATION

STANDARDS FOR HIGHWAYS AND INCIDENTAL STRUCTURES

TRAFFIC BARRIER THRIE-BEAM ANCHORAGE TO VERTICAL FACE AFTER 3" OVERLAY

STANDARD NO. 605.41-01