NOTE GRATES & FRAME, WITH FULL WIDTH FLANGE, TO BE USED IN LOW SPOTS AND ADJACENT TO CURB AS A STANDARD CLASS "S" INLET (DOUBLE GRATE TANDEM)

CAST IRON FRAME & GRATES
SEE LATEST S.H.A. SPECIFICATIONS

AVERAGE WEIGHTS
FRAME-CUT FLANGE=430 LBS. ±
FRAME-UNCUT=480 LBS. ±
GRATES-2=680 LBS. ±

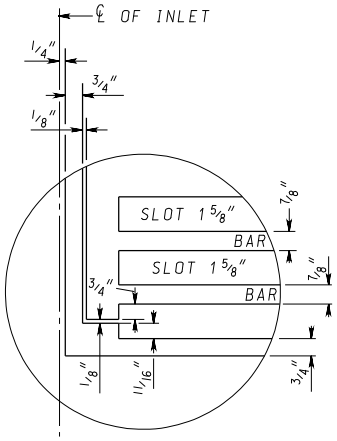

AREA "H" DETAIL

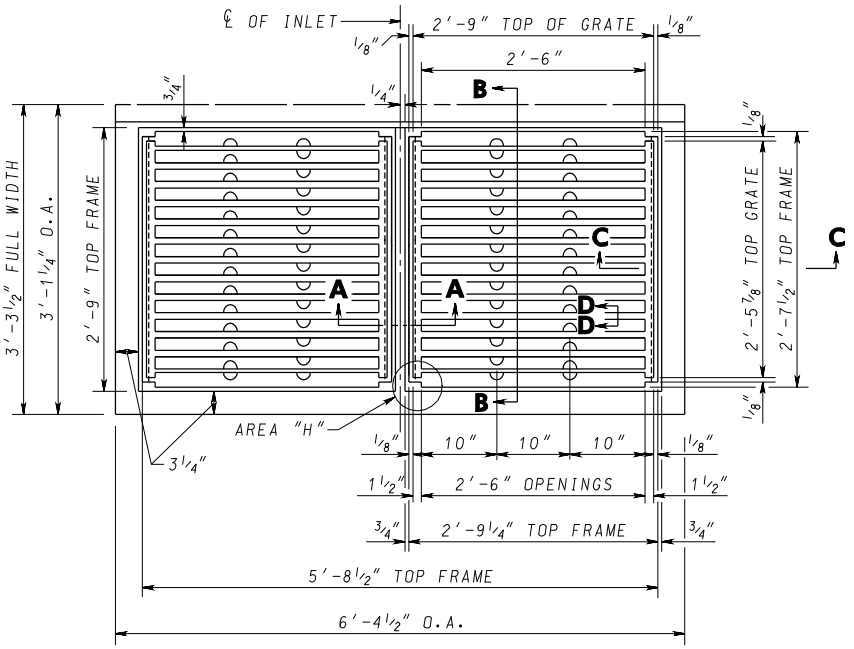

PLAN

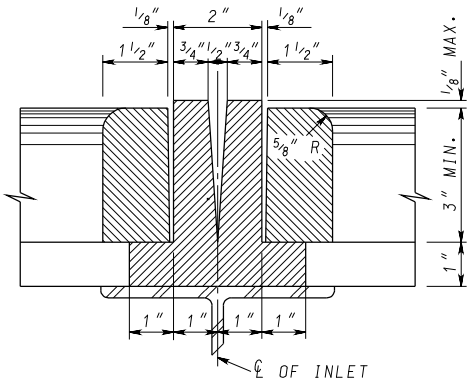

SECTION A-A

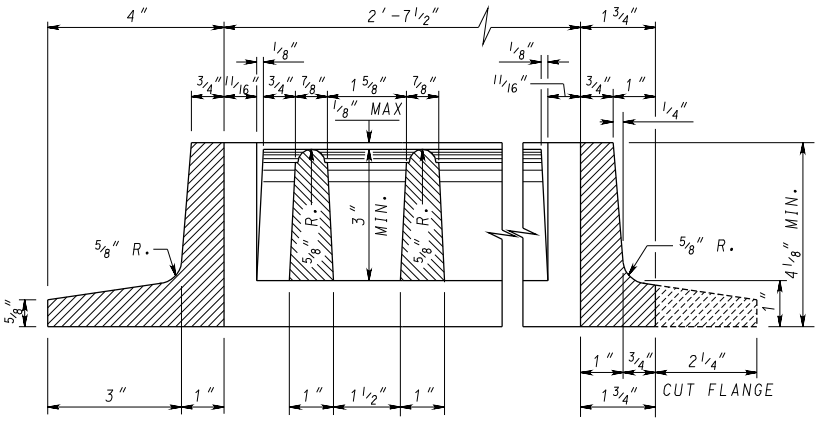

SECTION B-B

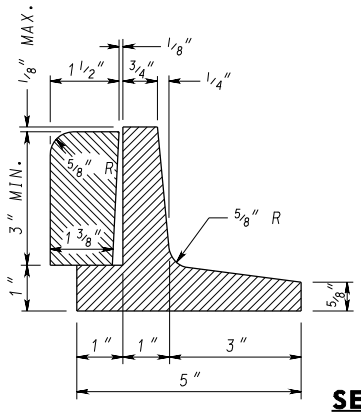

SECTION C-C

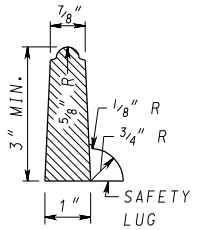

SECTION D-D

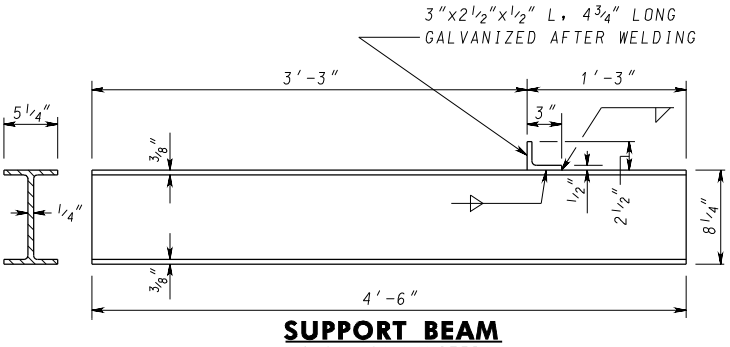

SUPPORT BEAM
W8x21 (GALVANIZED)

NOTE: NOT COMPATIBLE WITH BICYCLE.

SPECIFICATION	CATEGORY CODE ITEMS
APPROVED	Kirk G. McClelland DIRECTOR – OFFICE OF HIGHWAY DEVELOPMENT

APPROVAL • SHA REVISIONS		APPROVAL • FEDERAL HIGHWAY ADMINISTRATION	
APPROVAL	10-19-64	APPROVAL	7-21-65
REVISED	10-1-01	REVISED	9-21-87
REVISED	7-1-09	REVISED	7-27-09
REVISED		REVISED	

Maryland Department of Transportation
STATE HIGHWAY ADMINISTRATION
STANDARDS FOR HIGHWAYS AND INCIDENTAL STRUCTURES

STANDARD TYPE S INLET & COMBINATION FRAME & GRATE

STANDARD NO. MD 379.05