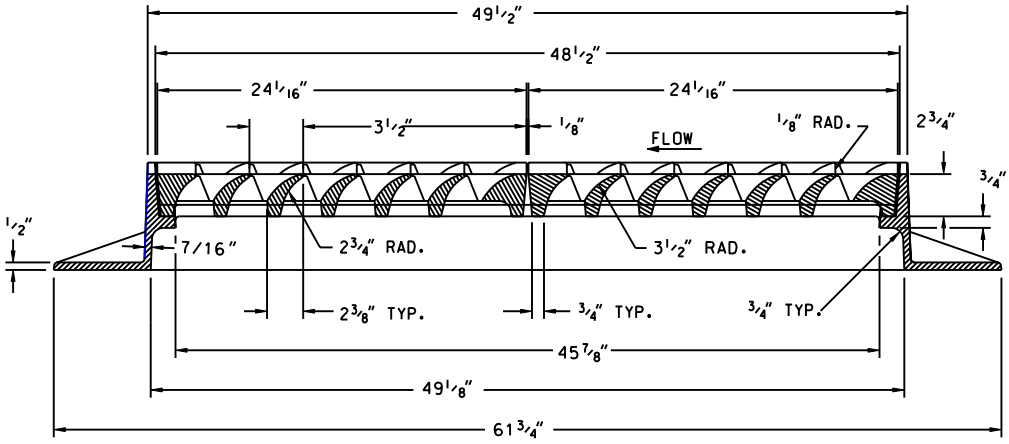

SECTION A–A

NOTES

FRAME AND GRATE HAVE A RADIAL SEAT OF 52 7/8" RAD.

TOP OF FRAME ALSO HAS RADIUS OF 52 7/8" RAD.

TOP OF GRATE HAS FLAT SURFACES WHICH CLOSELY MATCH THE RADIUS OF THE FRAME.

MATERIAL: CAST GRAY IRON ASTM A-48, CLASS 35B

FINISH: NOT PAINTED

FRAMES TO BE CASTING WITH FLANGE CUT, AS SHOWN, WHEN INLET TO BE PLACED ADAJCENT TO CURB OPENING.

FOR FULL FLANGE/DETAILS, REFER TO THE RESPECTIVE STANDARD PLATES FOR TYPE "E" INLET

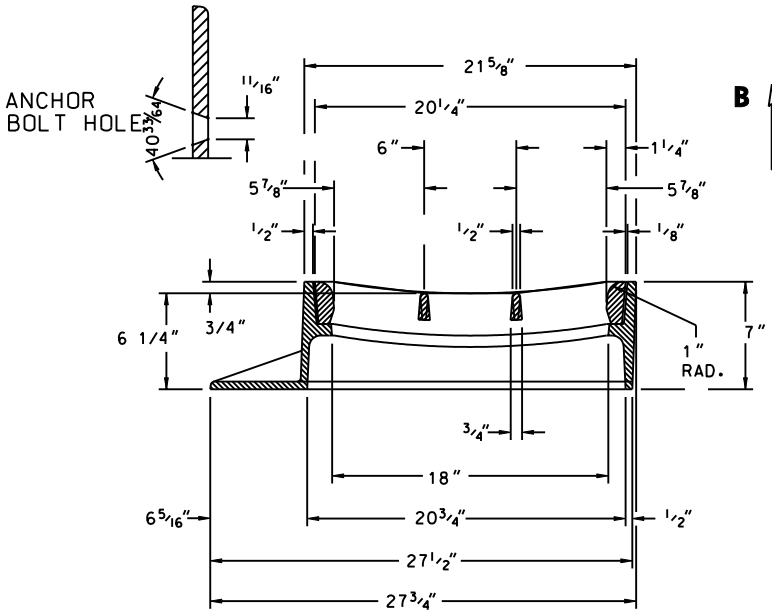

SECTION B–B

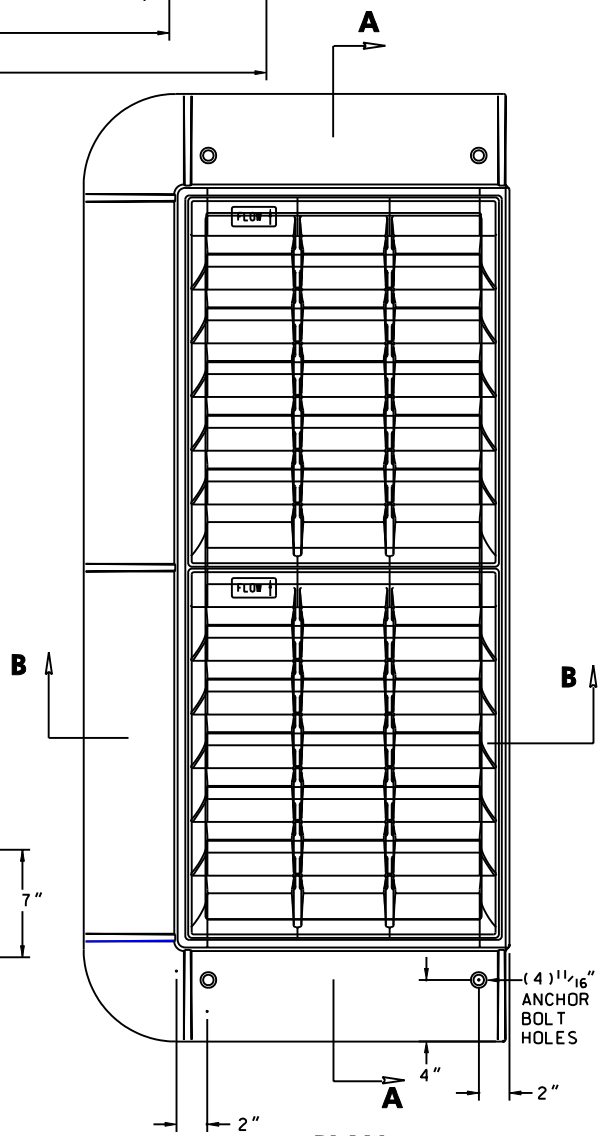

PLAN

SPECIFICATION 305		
APPROVED	Kirk G. McCallum DIRECTOR – OFFICE OF HIGHWAY DEVELOPMENT	
	APPROVAL • SHA REVISIONS	APPROVAL • FEDERAL HIGHWAY ADMINISTRATION
	APPROVAL 2-10-04	APPROVAL 3-31-04
	REVISED	REVISED
	REVISED	REVISED
	REVISED	REVISED

Maryland Department of Transportation
STATE HIGHWAY ADMINISTRATION

STANDARDS FOR HIGHWAYS AND INCIDENTAL STRUCTURES

ALTERNATE TYPE "E" INLET FRAME WITH CURVED VANE GRATES (E-CV)

STANDARD NO. MD 376.12-01