Note:
Butt ends of new treated timber pile and existing pile shall have the same diameter. All voids between the existing pile and the new pile section or the pile and the sleeve shall be filled with an epoxy. The epoxy shall be placed on the existing pile end before installing new section and on inside of the sleeve before placing on the pile.

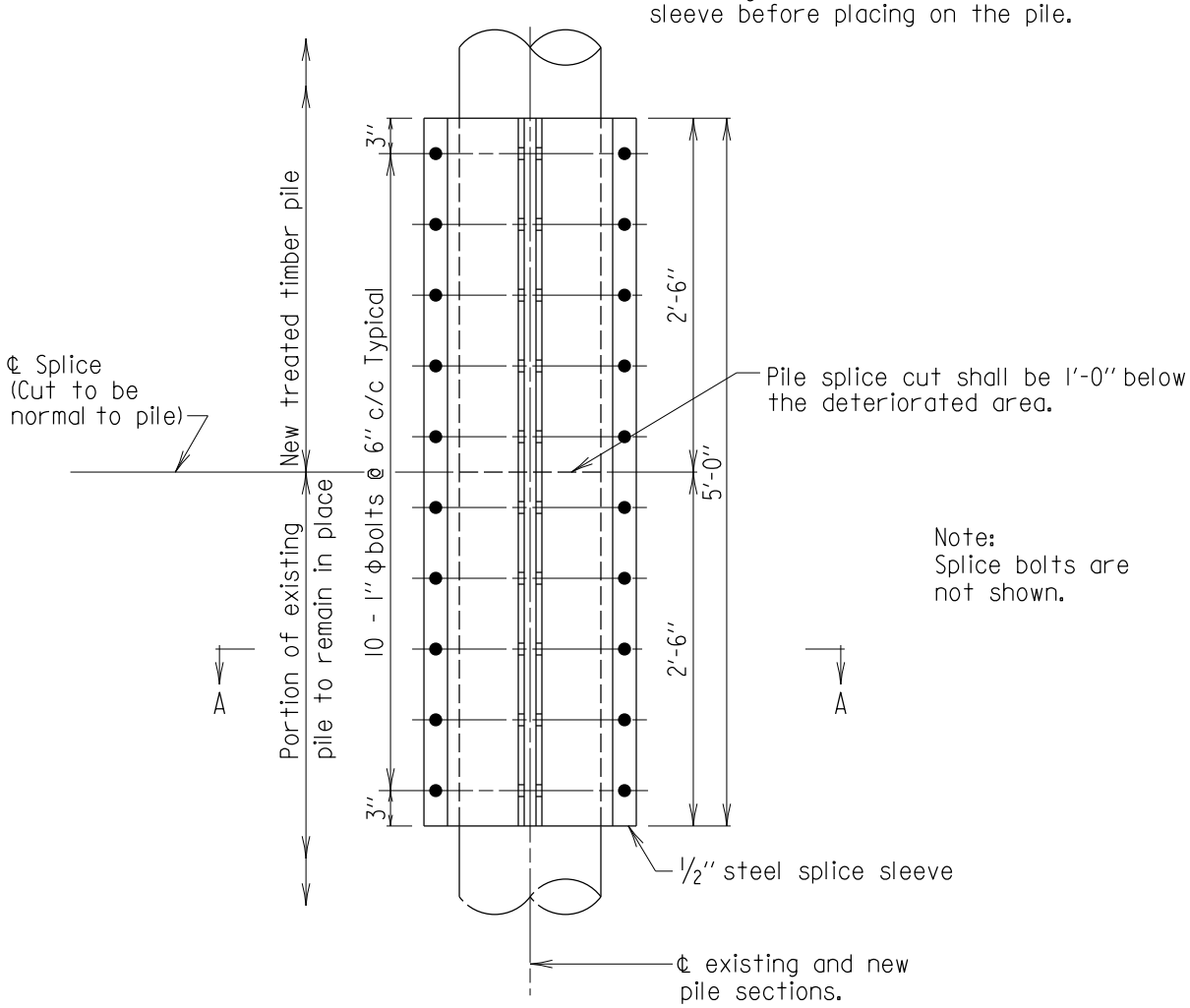

Note:
Splice bolts are not shown.

ELEVATION
PILE SPLICE SLEEVE
Scale: 3/4" = 1'-0"

Notes:
1. Epoxy shall be water insensitive with a consistancy of putty.
2. All structural steel shall be ASTM A 709 Grade 36 and be hot-dipped galvanized after fabrication in conformance with ASTM A 153.
3. Hardware shall be ASTM A 325 and be mechanically galvanized in conformance with ASTM A 153.
4. All timber for cross bracing and piling shall conform to Section 462. All timber for new cross bracing shall be No. 1 Southern Pine. All timber for piles shall be Southern Pine. All timber shall be treated with creosote with 20 lb/ft³ retention in conformance with AASHTO M 133.
5. For "Section A-A" see sheet nos. 2 and 3 of 8.

APPROVAL	
R.S. Freedman DIRECTOR OFFICE OF STRUCTURES	
DATE: 10/27/95	
REVISIONS	
SHA	FHWA
10-9-07	·
·	·
·	·
·	·

FHWA APPROVAL
DATE: .

STATE OF MARYLAND
DEPARTMENT OF TRANSPORTATION
STATE HIGHWAY ADMINISTRATION
OFFICE OF STRUCTURES

SPLICE FOR CONNECTING EXISTING TIMBER PILING TO NEW TIMBER PILING

STANDARD NO. BR-SR(0.01)-95-304 SHEET 1 OF 8

STRUCTURAL REPAIRS

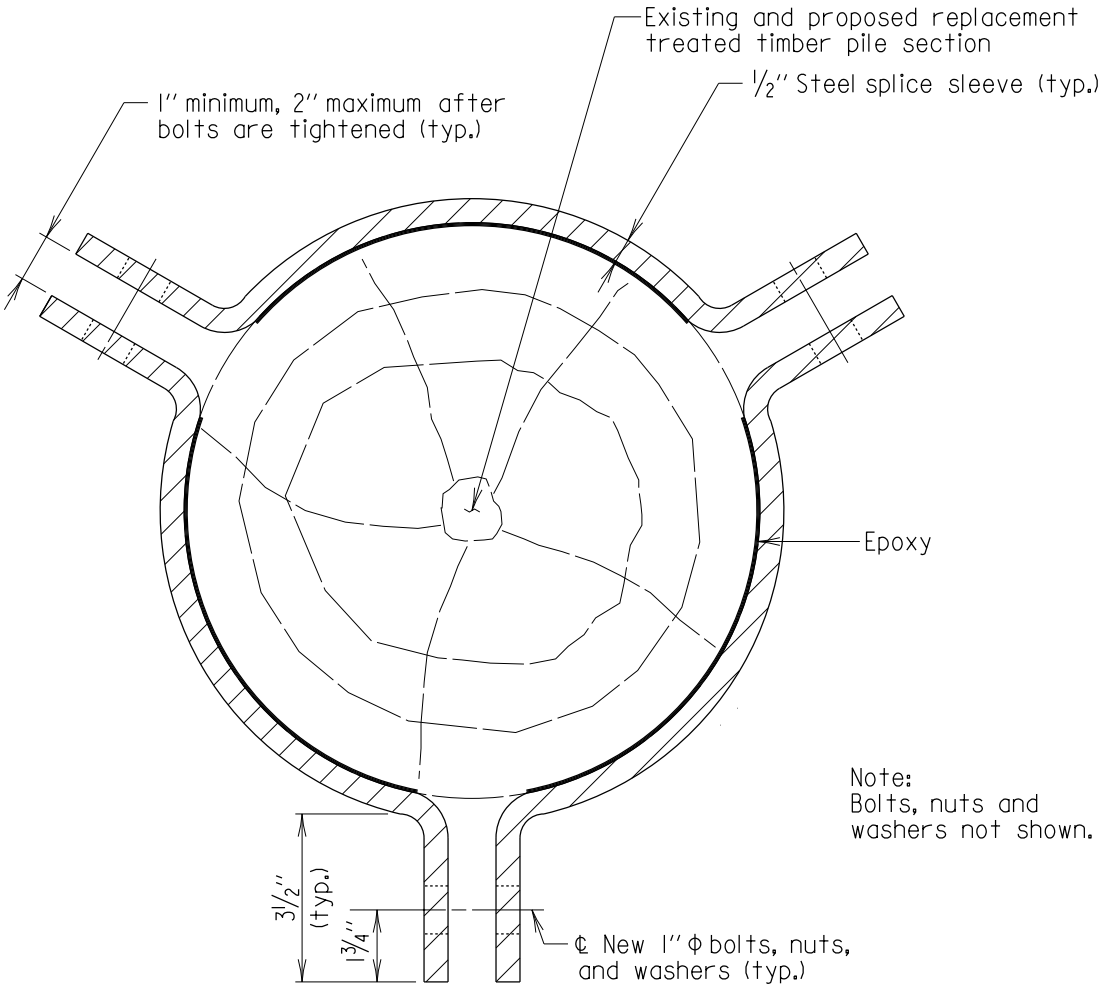

SECTION A-A (3 SECTION SPLICE ALTERNATE)

Scale: 3" = 1'-0"

Note:
The three section splice can only be used when there is no bracing being attached in splice area.

Note:
The 5'-0" steel pile splice sleeve shall be tightened enough to force out excess epoxy from around the circumference of the pile.

APPROVAL	
E.S. Freedman DIRECTOR OFFICE OF STRUCTURES	
DATE: 10/27/95	
REVISIONS	
SHA	FHWA
.	.
.	.
.	.
.	.

FHWA APPROVAL
DATE: .

STATE OF MARYLAND
DEPARTMENT OF TRANSPORTATION
STATE HIGHWAY ADMINISTRATION
OFFICE OF STRUCTURES

SPLICE FOR CONNECTING EXISTING TIMBER PILING TO NEW TIMBER PILING

STANDARD NO. BR-SR(0.01)-95-304

SHEET 2 OF 8

STRUCTURAL REPAIRS

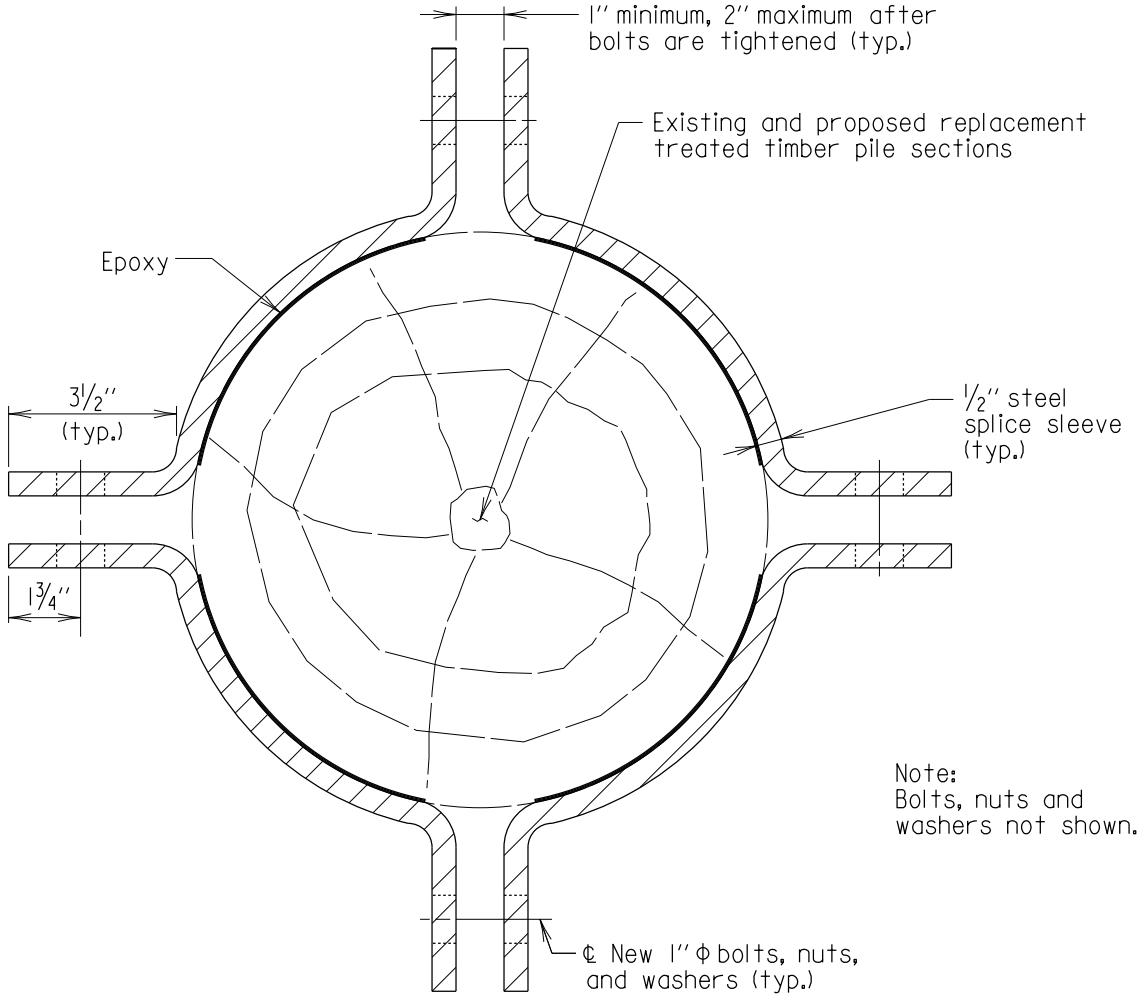

SECTION A-A (4 SECTION SPLICE ALTERNATE)

Scale: 3" = 1'-0"

Note:
The four section splice can be used at any location.

Note:
The 5'-0" steel pile splice sleeve shall be tightened enough to force out excess epoxy from around the circumference of the pile.

APPROVAL	
E.S. Freedman DIRECTOR OFFICE OF STRUCTURES DATE: 10/27/95	
REVISIONS	
SHA	FHWA
.	.
.	.
.	.
.	.

FHWA APPROVAL
DATE: .

STATE OF MARYLAND
DEPARTMENT OF TRANSPORTATION
STATE HIGHWAY ADMINISTRATION
OFFICE OF STRUCTURES

SPLICE FOR CONNECTING EXISTING TIMBER PILING TO NEW TIMBER PILING

STANDARD NO. BR-SR(0.01)-95-304 SHEET 3 OF 8

STRUCTURAL REPAIRS

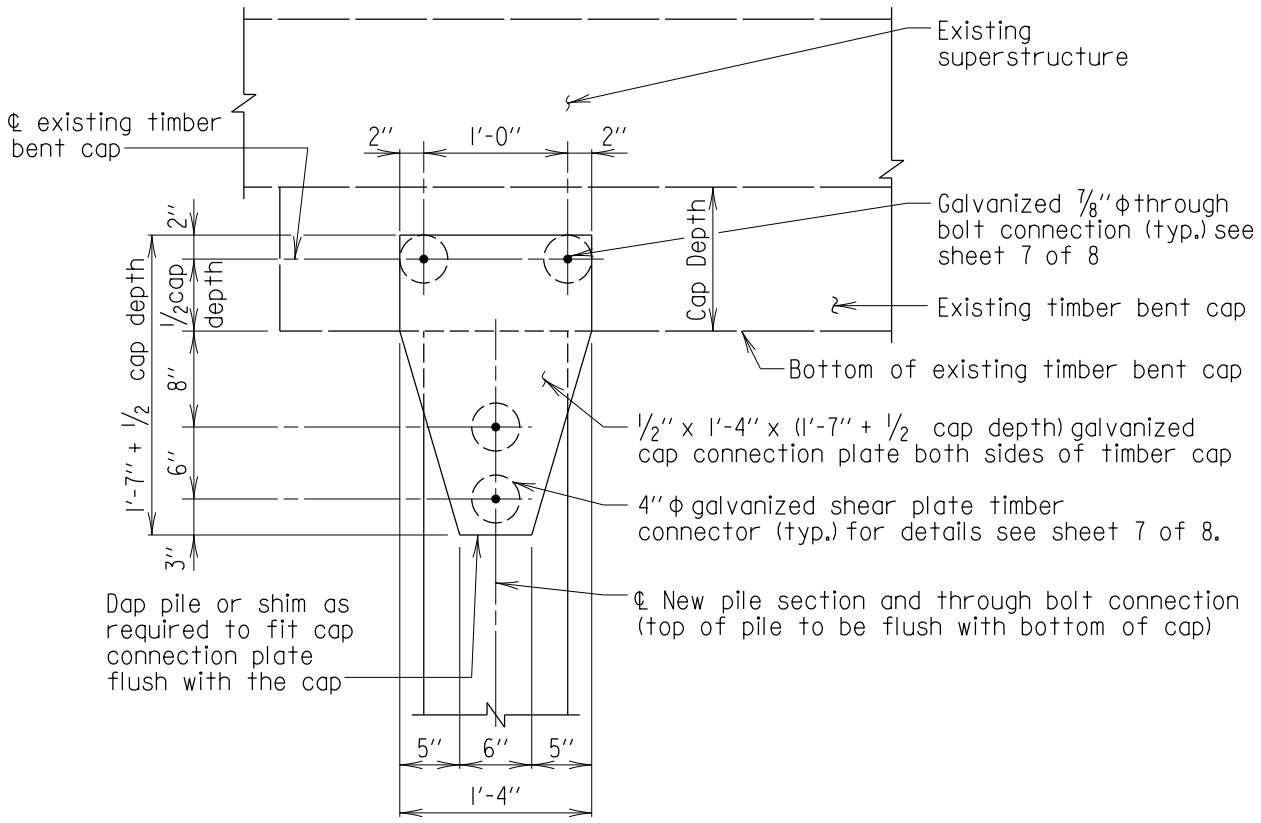

PILE CONNECTION FOR NONSTRENGTHENED TIMBER CAPS

Scale: 3/4'' = 1'-0''

Notes:

1. All field drilled holes in the piles shall have a compatible preservative treatment applied to them before bolting.
2. All steel plates, bolts, nuts, etc. shall be mechanically or hot dipped galvanized to conform with ASTM A 153.
3. Shims shall be galvanized ASTM A 709 Grade 36 steel.
4. All field drilled holes in the steel plates shall have a compatible galvanized touch up conforming to ASTM A 780 applied.

APPROVAL	
R.S. Freedman DIRECTOR OFFICE OF STRUCTURES	
DATE: 10/27/95	
REVISIONS	
SHA	FHWA
1-22-01	·
·	·
·	·
·	·

FHWA APPROVAL

DATE: .

STATE OF MARYLAND
DEPARTMENT OF TRANSPORTATION
STATE HIGHWAY ADMINISTRATION
OFFICE OF STRUCTURES

CONNECTION OF NEW TIMBER PILE SECTION TO EXISTING TIMBER CAP

STANDARD NO. BR-SR(0.01)-95-304

SHEET 4 OF 8

STRUCTURAL REPAIRS

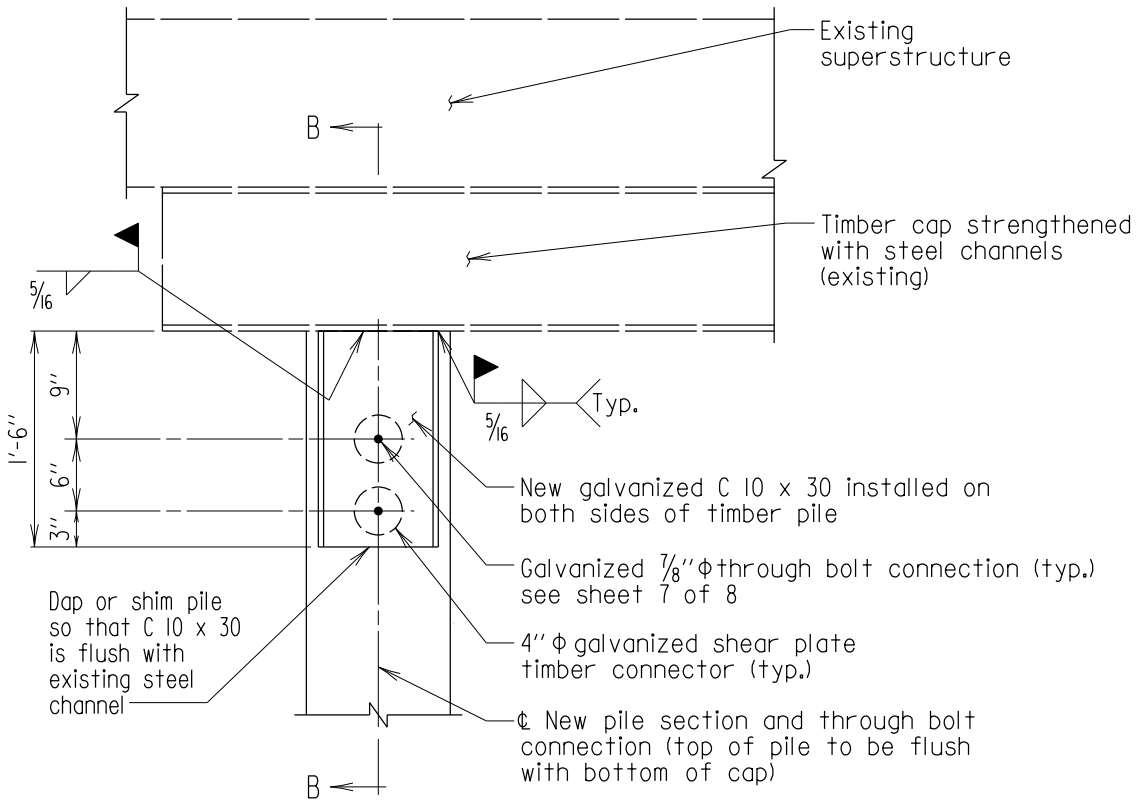

PILE CONNECTION FOR STEEL CHANNEL STRENGTHENED TIMBER CAPS

Scale: 3/4" = 1'-0"

Notes:

1. All steel plates, bolts, nuts, etc. shall be mechanically or hot dipped galvanized to conform to ASTM A 153.
2. Shims shall be galvanized ASTM A 709 Grade 36 steel.
3. This detail is <u>not designed</u> to transfer cap loads to the pile.
4. Areas of field welding and drilling shall be repaired with a galvanized touch up kit conforming to ASTM A 780.
5. All field drilled holes in the piles shall have a compatible preservative treatment applied to them before bolting.
6. For Section B-B see sheet 6 of 8.

APPROVAL	
E.S. Freedman DIRECTOR OFFICE OF STRUCTURES	
DATE: 10/27/95	
REVISIONS	
SHA	FHWA
1-22-01	·
·	·
·	·
·	·

FHWA APPROVAL

DATE: .

STATE OF MARYLAND
DEPARTMENT OF TRANSPORTATION
STATE HIGHWAY ADMINISTRATION
OFFICE OF STRUCTURES

CONNECTION OF NEW TIMBER PILE SECTION TO EXISTING STEEL CHANNEL STRENGTHENED TIMBER CAP

STANDARD NO. BR-SR(0.01)-95-304

SHEET 5 OF 8

STRUCTURAL REPAIRS

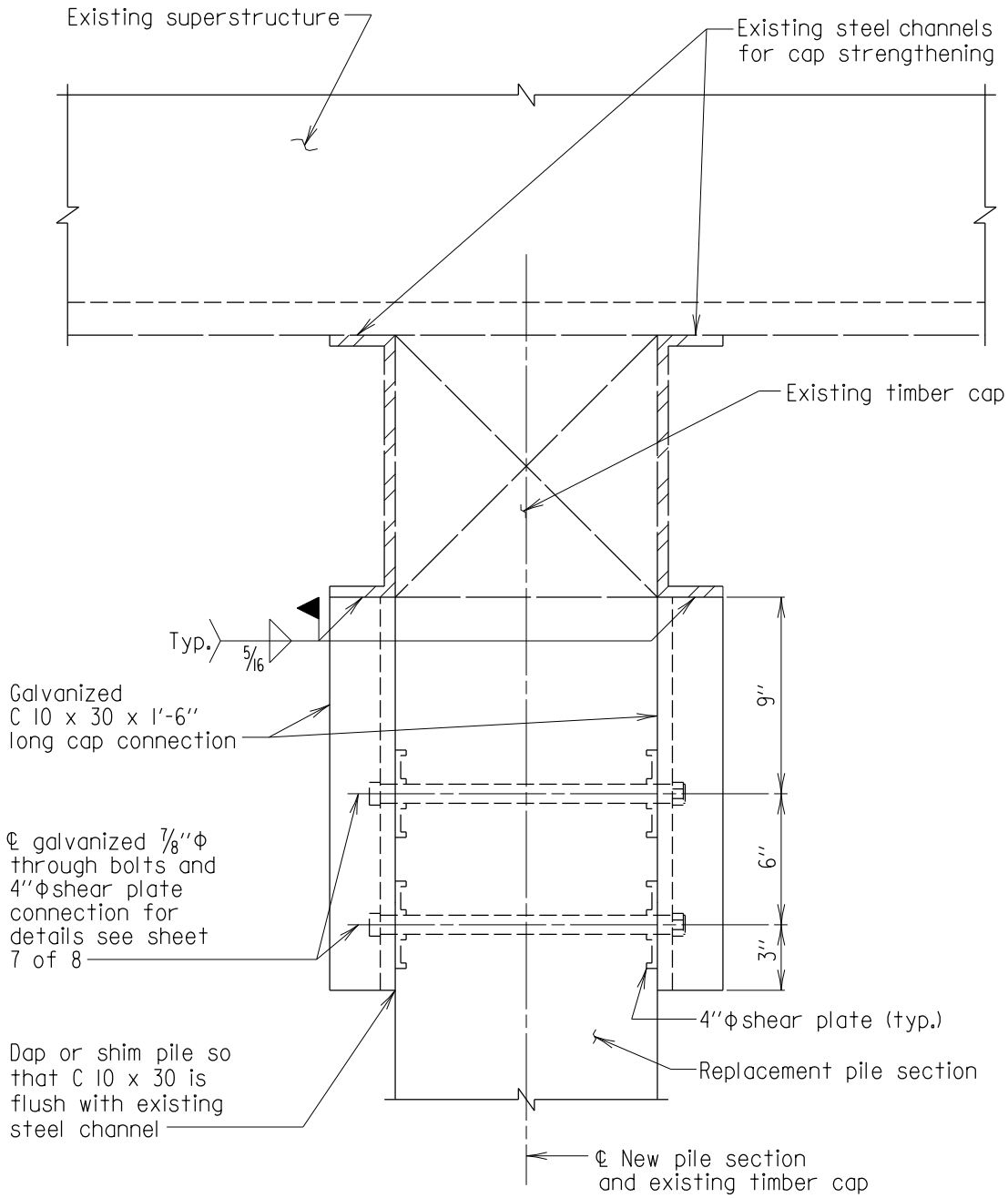

SECTION B-B

Scale: 1½" = 1'-0"

APPROVAL	
R.S. Freedman DIRECTOR OFFICE OF STRUCTURES DATE: 10/27/95	
REVISIONS	
SHA	FHWA
10-9-07	·
·	·
·	·
·	·

FHWA APPROVAL
DATE: .

STATE OF MARYLAND
DEPARTMENT OF TRANSPORTATION
STATE HIGHWAY ADMINISTRATION
OFFICE OF STRUCTURES

CONNECTION OF NEW TIMBER PILE SECTION TO EXISTING STEEL CHANNEL STRENGTHENED TIMBER CAP

STANDARD NO. BR-SR(0.01)-95-304

SHEET 6 OF 8

STRUCTURAL REPAIRS

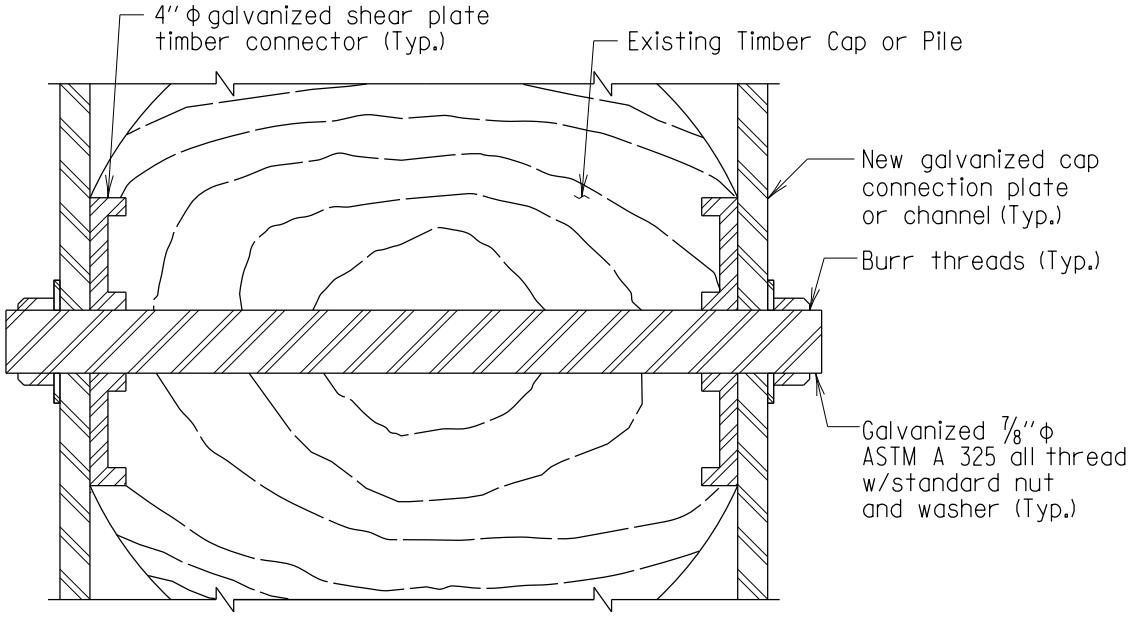

TYPICAL THROUGH BOLT CONNECTION

Scale: 3/8'' = 1''

APPROVAL	
E.S. Freedman DIRECTOR OFFICE OF STRUCTURES	
DATE: 10/27/95	
REVISIONS	
SHA	FHWA
1-22-01	·
·	·
·	·
·	·

FHWA APPROVAL
DATE: .

STATE OF MARYLAND
DEPARTMENT OF TRANSPORTATION
STATE HIGHWAY ADMINISTRATION
OFFICE OF STRUCTURES

CONNECTION OF NEW TIMBER PILE SECTION TO EXISTING STEEL CHANNEL STRENGTHENED TIMBER CAP

STANDARD NO. BR-SR(0.01)-95-304 SHEET 7 OF 8

STRUCTURAL REPAIRS

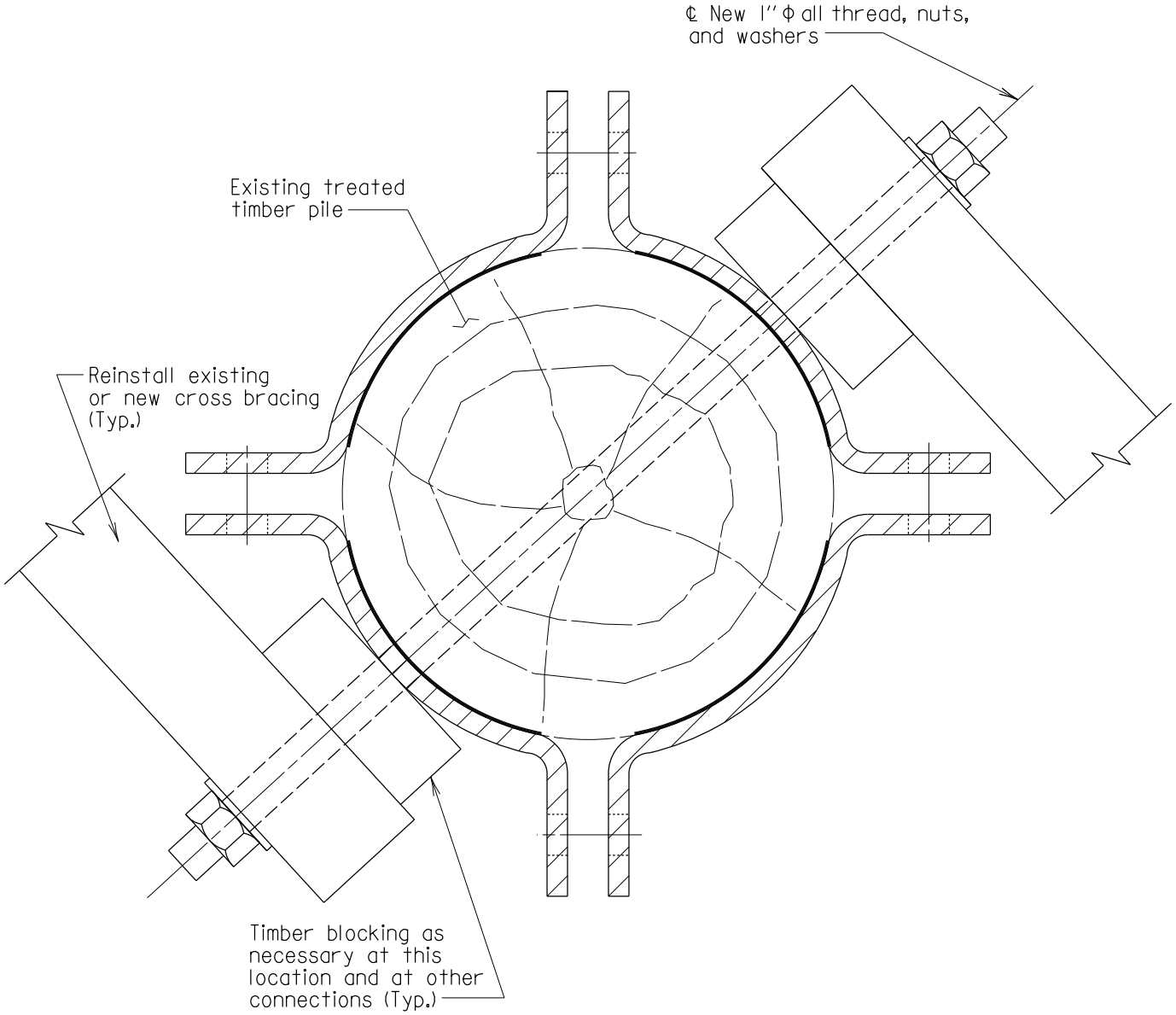

4 SECTION SPLICE CROSS BRACING DETAIL

Scale: $1\frac{1}{2}''$ = 1'-0''

Note:
Refer to the General Plan and Elevation to see whether new cross bracing is required and at which locations.

APPROVAL	
E.S. Freedman DIRECTOR OFFICE OF STRUCTURES DATE: 10/27/95	
REVISIONS	
SHA	FHWA
.	.
.	.
.	.
.	.

FHWA APPROVAL
DATE: .

STATE OF MARYLAND
DEPARTMENT OF TRANSPORTATION
STATE HIGHWAY ADMINISTRATION
OFFICE OF STRUCTURES

SPLICE FOR CONNECTING EXISTING TIMBER PILING TO NEW TIMBER PILING CROSS BRACING DETAILS

STANDARD NO. BR-SR(0.01)-95-304 SHEET 8 OF 8

STRUCTURAL REPAIRS

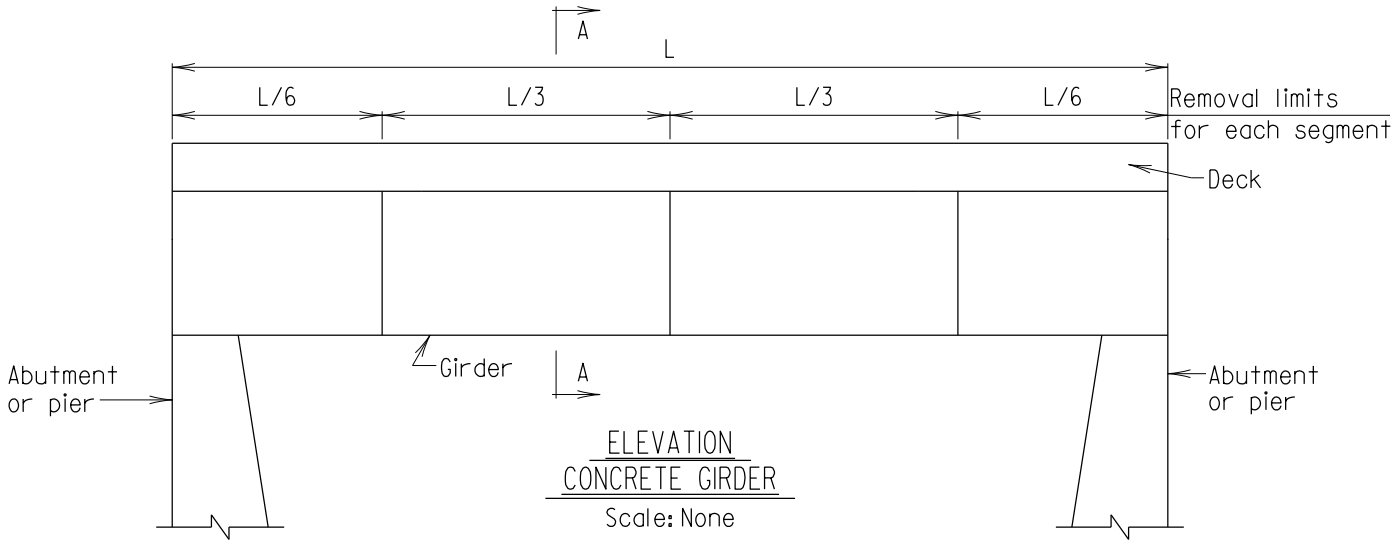

ELEVATION
CONCRETE GIRDER
Scale: None

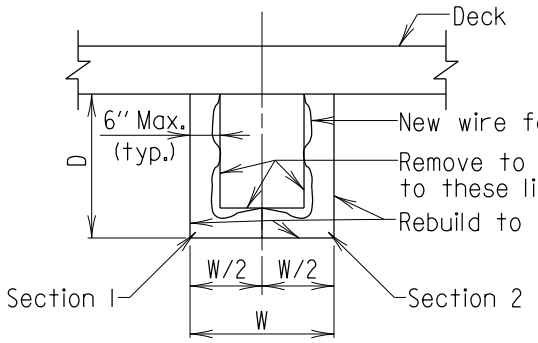

Note:
For new wire fabric refer to 908.08.

Note:
E and F are original pier cap dimensions.

Note:
D and W are original girder dimensions.

SECTION A-A
Scale: None

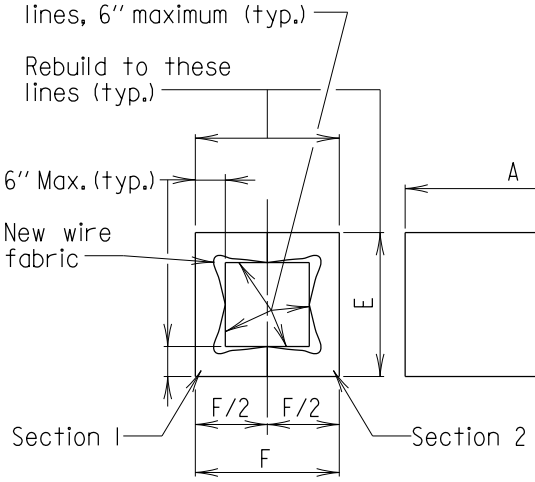

SECTION B-B
Scale: None

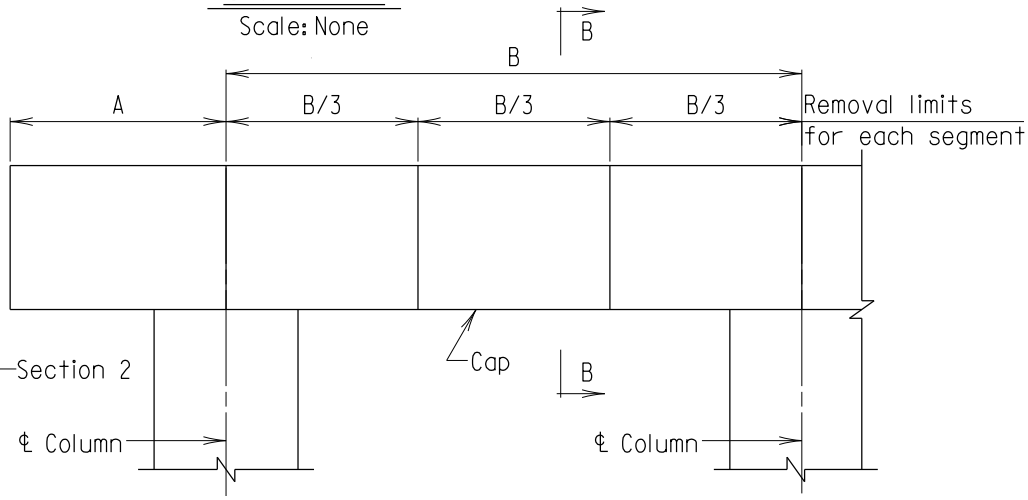

ELEVATION - PIER CAP
Scale: None

Notes:
1. Concrete elements are divided into segments. Work to be performed on sections as provided below.
2. Refer to Section 423.
3. Contractor shall stage the work so that the worse sections are repaired first.
4. Contractor shall not work on more than two nonadjacent sections on each pier cap, column, or girder at one time.
5. Contractor shall wait 72 hours after completing repairs to a section before chipping adjacent sections, however he may perform work on other bridge elements.
6. Contractor shall stop removing deteriorated concrete when a maximum depth of 6 in. is reached. The Engineer shall immediately notify the Office of Bridge Development if more removal seems necessary.
7. Existing reinforcing steel not shown.
8. For column repair details, see sheet 2 of 2.

APPROVAL	
E.S. Freedman DIRECTOR OFFICE OF STRUCTURES DATE: 11/14/95	
REVISIONS	
SHA	FHWA
1-22-01	·
·	·
·	·
·	·
FHWA APPROVAL DATE: .	

STATE OF MARYLAND
DEPARTMENT OF TRANSPORTATION
STATE HIGHWAY ADMINISTRATION
OFFICE OF BRIDGE DEVELOPMENT

PNEUMATICALLY APPLIED MORTAR
SEQUENCE AND REPAIR DETAILS

STANDARD NO. BR-SR(0.02)-95-305 SHEET 1 OF 2

STRUCTURAL REPAIRS

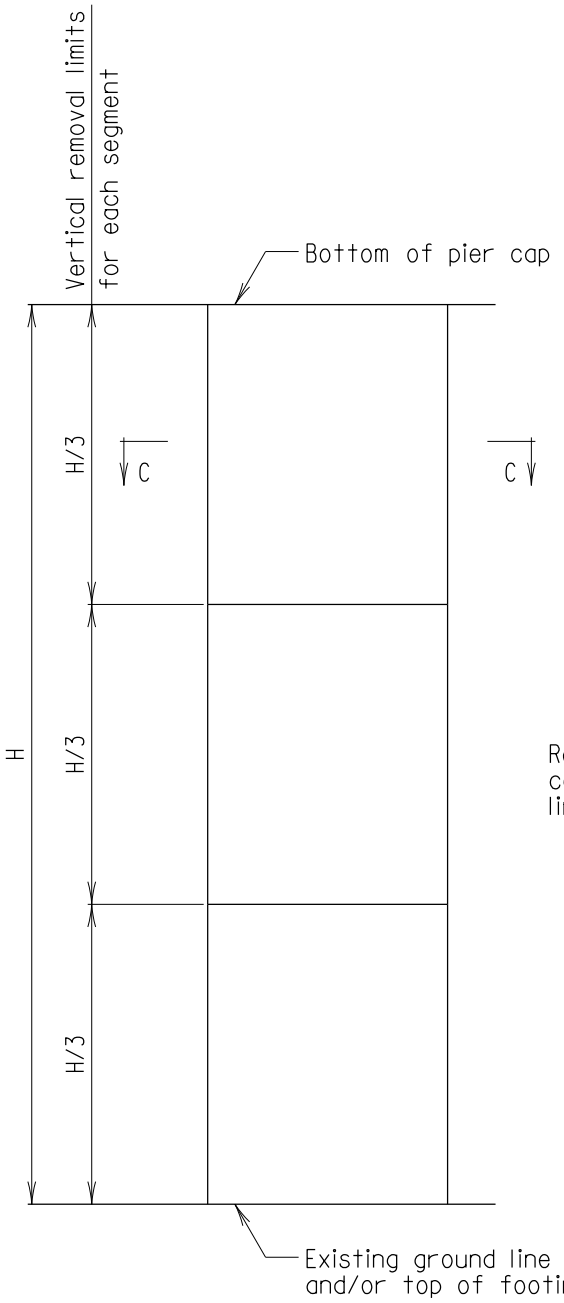

ELEVATION
PIER COLUMN
Scale: None

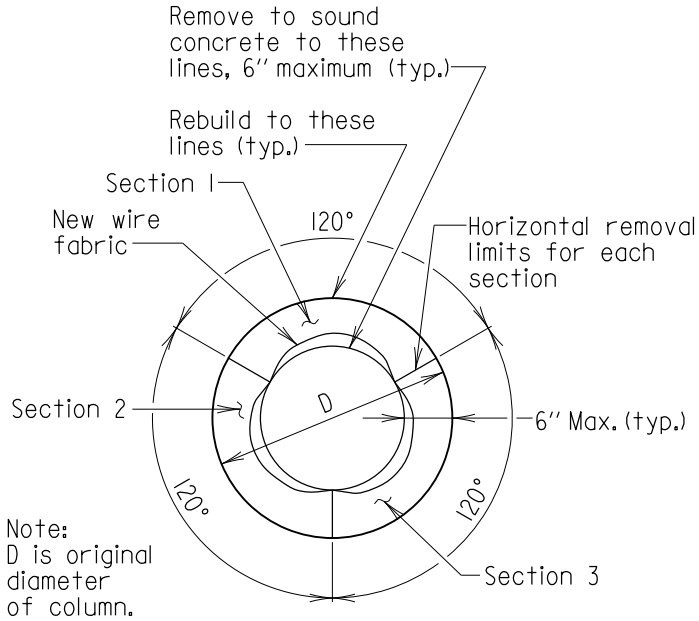

CIRCULAR COLUMN

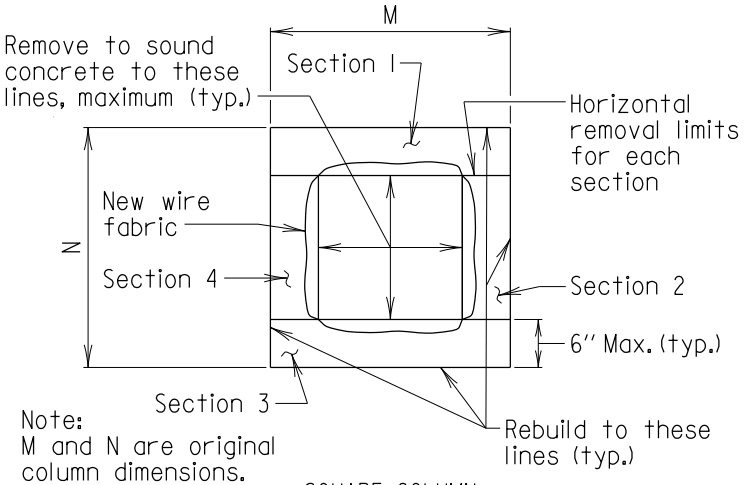

SQUARE COLUMN

Note:
For new wire fabric refer to 908.08.

SECTION C-C
Scale: None

Notes:
1. When height of columns is more than 18 ft., the Contractor will be restricted to 6 ft. segments.
2. Refer to Section 423.
3. For notes, see sheet 1 of 2.

APPROVAL	
E.S. Freedman DIRECTOR OFFICE OF STRUCTURES DATE: 11/14/95	
REVISIONS	
SHA	FHWA
1-22-01	·
6-19-08	·
FHWA APPROVAL	· ·
DATE: .	· ·

STATE OF MARYLAND
DEPARTMENT OF TRANSPORTATION
STATE HIGHWAY ADMINISTRATION
OFFICE OF BRIDGE DEVELOPMENT

PNEUMATICALLY APPLIED MORTAR SEQUENCE AND REPAIR DETAILS

STANDARD NO. BR-SR(0.02)-95-305 SHEET 2 OF 2

STRUCTURAL REPAIRS

DESIGN GUIDELINES FOR JACKING BEAMS

1) The temporary jacking system is to be designed at operating stress levels.

2) A five percent increase to the dead load beam reaction is required for deck stiffness.

3) Bolts shall be ASTM A 325 with the threads included in the shear plane if possible. The connection shall be designed in bearing with the reduced root area. ASTM A 490 bolts are acceptable.

4) Minimum stiffener and connection plate thickness shall be 1/2".

5) Designers should attempt to minimize the number of different jacking systems for the bridge by designing a system that will work in multiple locations.

6) Minimum fillet weld size shall be 5/16".

7) Avoid bent connection plates where possible. If the skew angle does not allow placing straight connection plates from the existing stiffener to the web, attach the connection plate full height to the existing web and design it as a stiffener. Place it far enough from the existing stiffener to allow welding the connection plate to the web and still have full bearing under the jacking system.

8) The jack stand can only accomodate a jack with a diameter of 6" or less. Most jacks greater than 75 tons will require a different stand.

9) The possibility of shifting traffic off of the stringer to be jacked should be discussed with the ADE-Traffic. This would allow designing for only dead load.

10) When designing a jacking beam the designer may want to start with the following trial sections:

* LOAD (X)	BOLTS	BEAM	CONNECTION PLATE
X ≤ 35K	3 - 7/8"ΦA 325	W 12 x 26	1/2" x 9"
35K < X ≤ 45K	3 - 1"ΦA 325	W 14 x 26	1/2" x 11"
45K < X ≤ 60K	4 - 1"ΦA 325	W 18 x 35	1/2" x 14 1/2"
60K < X ≤ 80K	4 - 1"ΦA 490	W 18 x 35	1/2" x 18"

* Load (X) is dead load and live load plus impact at the bolts

FOR OFFICE USE ONLY

APPROVAL	
E.S. Freedman DIRECTOR OFFICE OF STRUCTURES DATE: 11/14/95	
REVISIONS	
SHA	FHWA
1-22-01	·
·	·
·	·
·	·

FHWA APPROVAL
DATE: .

STATE OF MARYLAND
DEPARTMENT OF TRANSPORTATION
STATE HIGHWAY ADMINISTRATION
OFFICE OF STRUCTURES

JACKING BEAM
DESIGN GUIDELINES

STANDARD NO. BR-SR(0.03)-95-306 SHEET 1 OF 1

STRUCTURAL REPAIRS

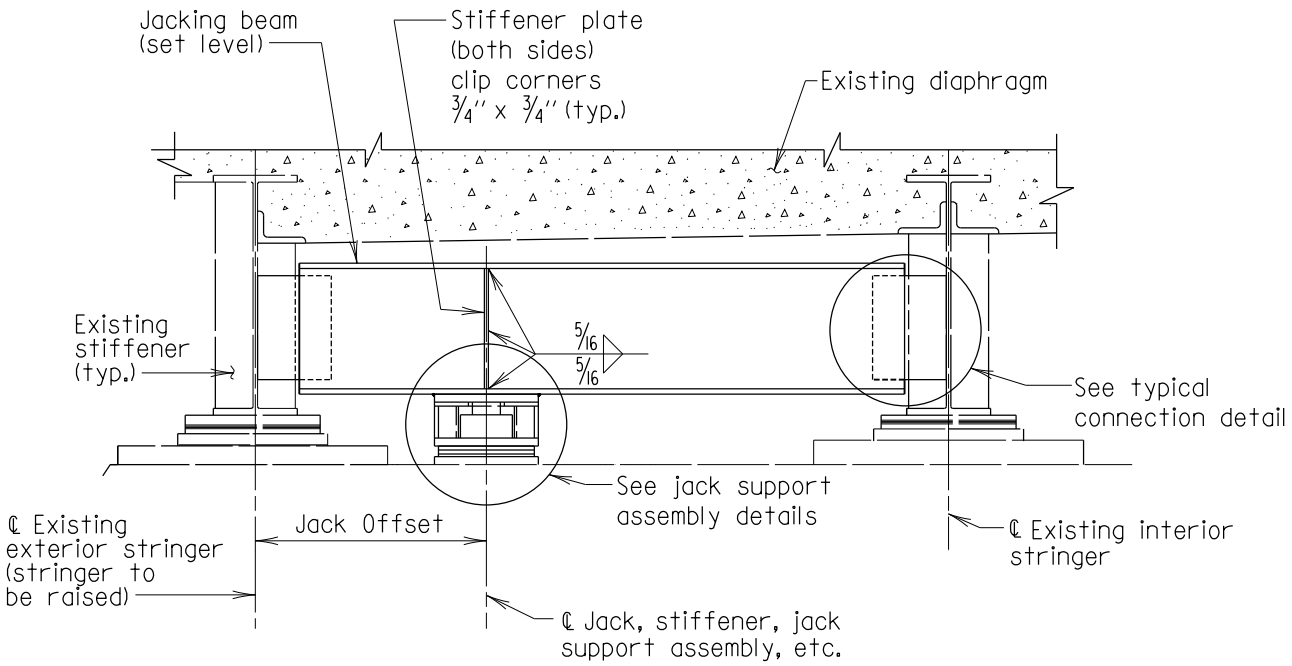

EXTERIOR - JACKING BEAM

Scale : None

JACKING BEAM TABLE		
	Size:	Location:
Jacking Beam		
Steel Grade		
Stiffener Plate Size		
Jack Offset		
Maximum Jack Force		
Minimum Section Modulus		
Minimum Cross Sectional Web Area		
Minimum Web Thickness		

Notes:

1. Jacking beams do not have to be new, but shall be in good condition.
2. The jack shall not be used to support load during bearing repairs.
3. Jacking beams shall be placed level unless otherwise noted.
4. The Contractor has the option of submitting another method of jacking to the Engineer for approval. The design shall be done by a PE registered in Md.
5. Jacking beams shall be kept low to minimize height of stacked plates or the HP column jack support.
6. Anchor bolt nuts may need to be loosened at the exterior and adjacent interior stringers to allow the stringer to rise.
7. Stringers shall not be raised more than 1/8" above its existing elevation.

APPROVAL		
R.S. Friedman DIRECTOR OFFICE OF STRUCTURES DATE: 11/14/95		
REVISIONS		
SHA	FHWA	

FHWA APPROVAL
DATE:

STATE OF MARYLAND
DEPARTMENT OF TRANSPORTATION
STATE HIGHWAY ADMINISTRATION
OFFICE OF STRUCTURES

EXTERIOR BEAM JACKING DETAILS

STANDARD NO. BR-SR(0.04)-95-307 SHEET 1 OF 6

STRUCTURAL REPAIRS

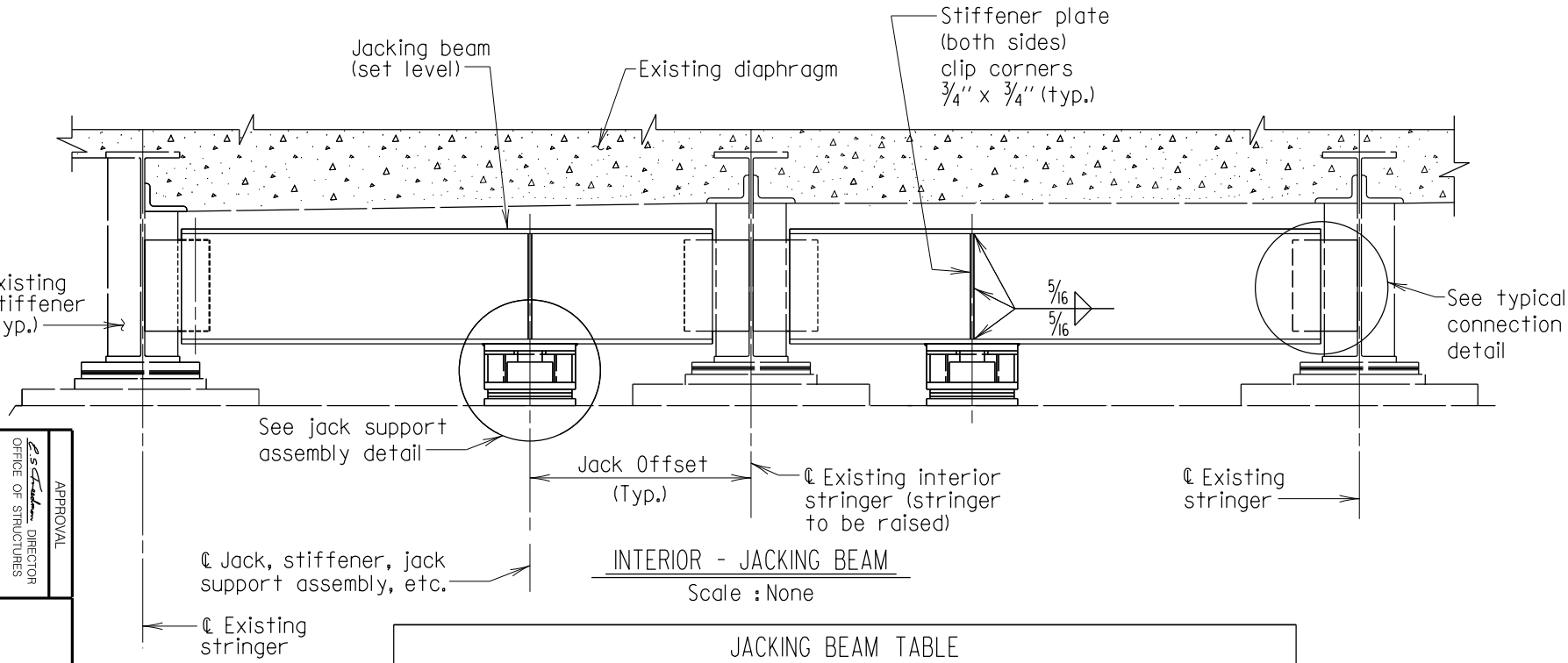

INTERIOR - JACKING BEAM

Scale : None

JACKING BEAM TABLE		
	Size:	Location:
Jacking Beam		
Steel Grade		
Stiffener Plate Size		
Jack Offset		
Maximum Jack Force		
Minimum Section Modulus		
Minimum Cross Sectional Web Area		
Minimum Web Thickness		

Notes:

1. Jacking beams do not have to be new, but shall be in good condition.
2. The jack shall not be used to support load during bearing repairs.
3. Jacking beams shall be placed level unless otherwise noted.
4. The Contractor has the option of submitting another method of jacking to the Engineer for approval. The design shall be done by a PE registered in Md.
5. Jacking beams shall be kept low to minimize height of stacked plates or the HP column jack support.
6. Anchor bolt nuts may need to be loosened at the exterior and adjacent interior stringers to allow the stringer to rise.
7. Stringers shall not be raised more than 1/8" above its existing elevation.

FHWA APPROVAL
DATE:

APPROVAL
DIRECTOR
OFFICE OF STRUCTURES
DATE: 11/14/95

REVISIONS
SHA
FHWA

STATE OF MARYLAND
DEPARTMENT OF TRANSPORTATION
STATE HIGHWAY ADMINISTRATION
OFFICE OF STRUCTURES

INTERIOR BEAM JACKING DETAILS

STANDARD NO. BR-SR(0.04)-95-307

SHEET 2 OF 6

STRUCTURAL REPAIRS

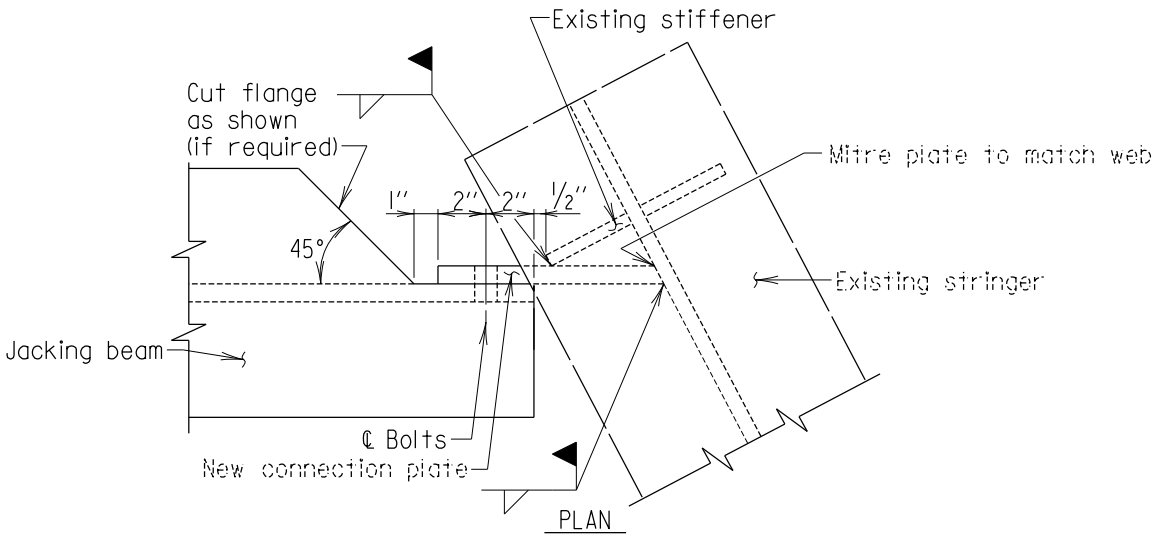

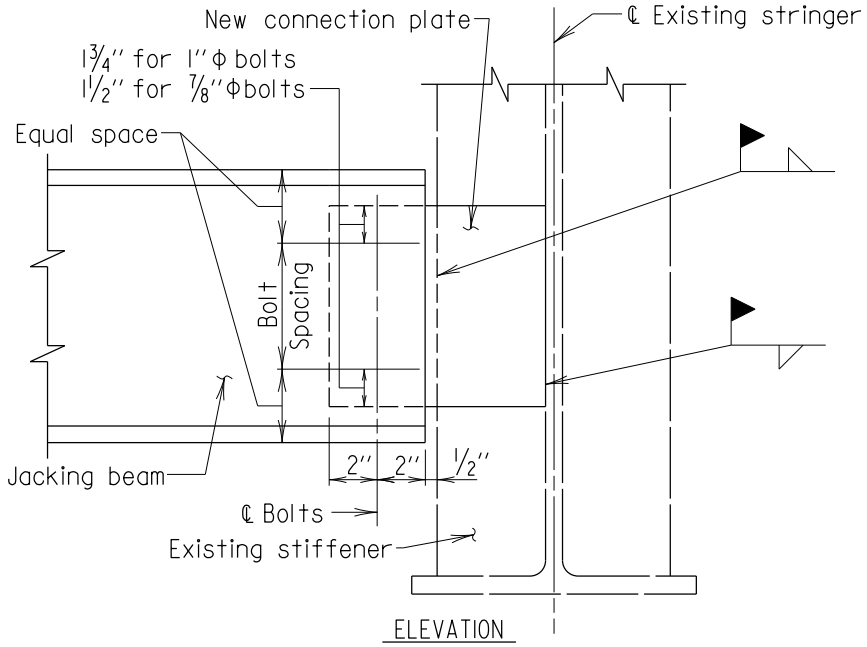

TYPICAL SKEWED CONNECTION DETAIL

Scale : None

CONNECTION DETAILS		
	Materials:	Location:
Connection Plate Size		
Connection Plate Weld		
Number of Bolts		
Bolt (Type and Size)		
Bolt Spacing c/c		
Existing Stiffener Plate Size		
Steel Grade		

Notes:
Any steel that has been welded to the existing bridge shall remain in place.
The repaired area and any other areas damaged shall be repaired in conformance with 436.

APPROVAL
E.S. Freedman DIRECTOR OFFICE OF STRUCTURES
DATE: 11/14/95

REVISIONS	
SHA	FHWA
11-17-97	·
4-17-01	·
7-24-01	·
1-12-10	·

FHWA APPROVAL
DATE: .

STATE OF MARYLAND
DEPARTMENT OF TRANSPORTATION
STATE HIGHWAY ADMINISTRATION
OFFICE OF STRUCTURES

SKEWED CONNECTION DETAILS

STANDARD NO. BR-SR(0.04)-95-307

SHEET 3 OF 6

STRUCTURAL REPAIRS

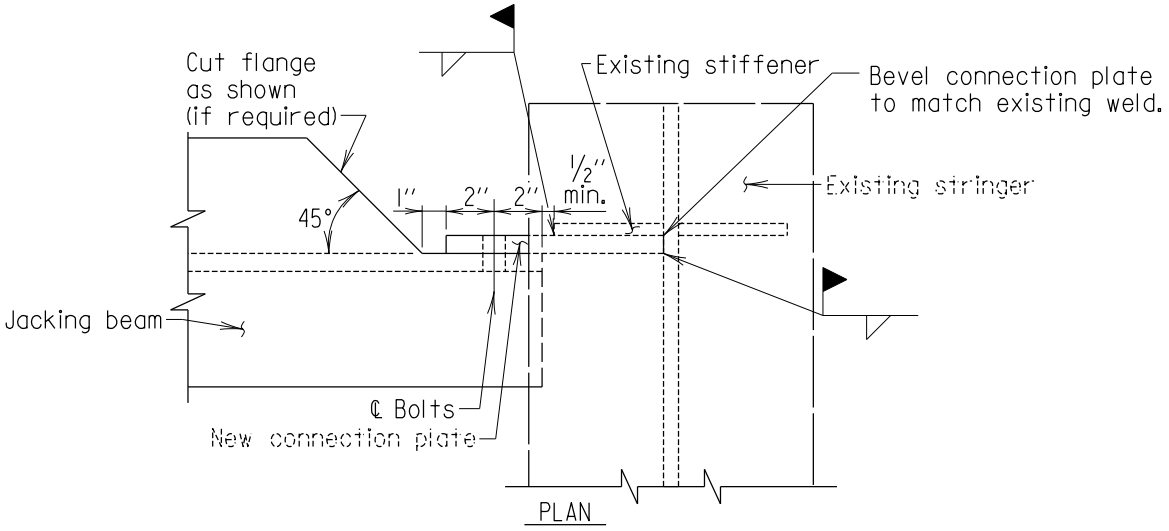

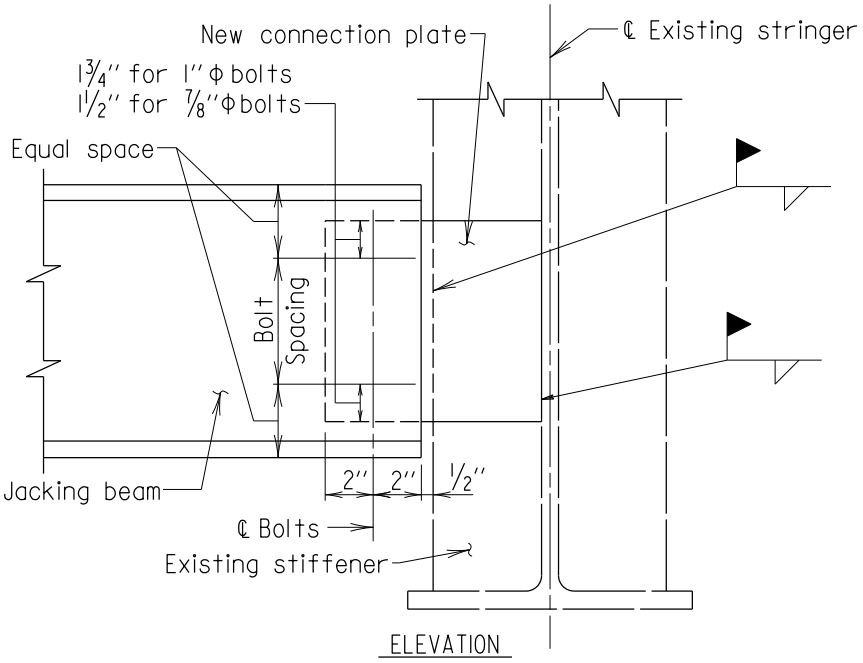

TYPICAL 90° CONNECTION DETAIL

Scale : None

CONNECTION DETAILS		
	Materials:	Location:
Connection Plate Size		
Connection Plate Weld		
Number of Bolts		
Bolt (Type and Size)		
Bolt Spacing c/c		
Existing Stiffener Plate Size		
Steel Grade		

Notes:
Any steel that has been welded to the existing bridge shall remain in place. The repaired area and any other areas damaged shall be repaired in conformance with 413.03.15.

APPROVAL	
E.S. Freedman DIRECTOR OFFICE OF STRUCTURES	
DATE: 11/14/95	
REVISIONS	
SHA	FHWA
4-17-01	·
7-24-01	·
12-17-01	·
7-20-10	·

FHWA APPROVAL
DATE: .

STATE OF MARYLAND
DEPARTMENT OF TRANSPORTATION
STATE HIGHWAY ADMINISTRATION
OFFICE OF STRUCTURES

90° CONNECTION DETAILS

STANDARD NO. BR-SR(0.04)-95-307

SHEET 4 OF 6

STRUCTURAL REPAIRS

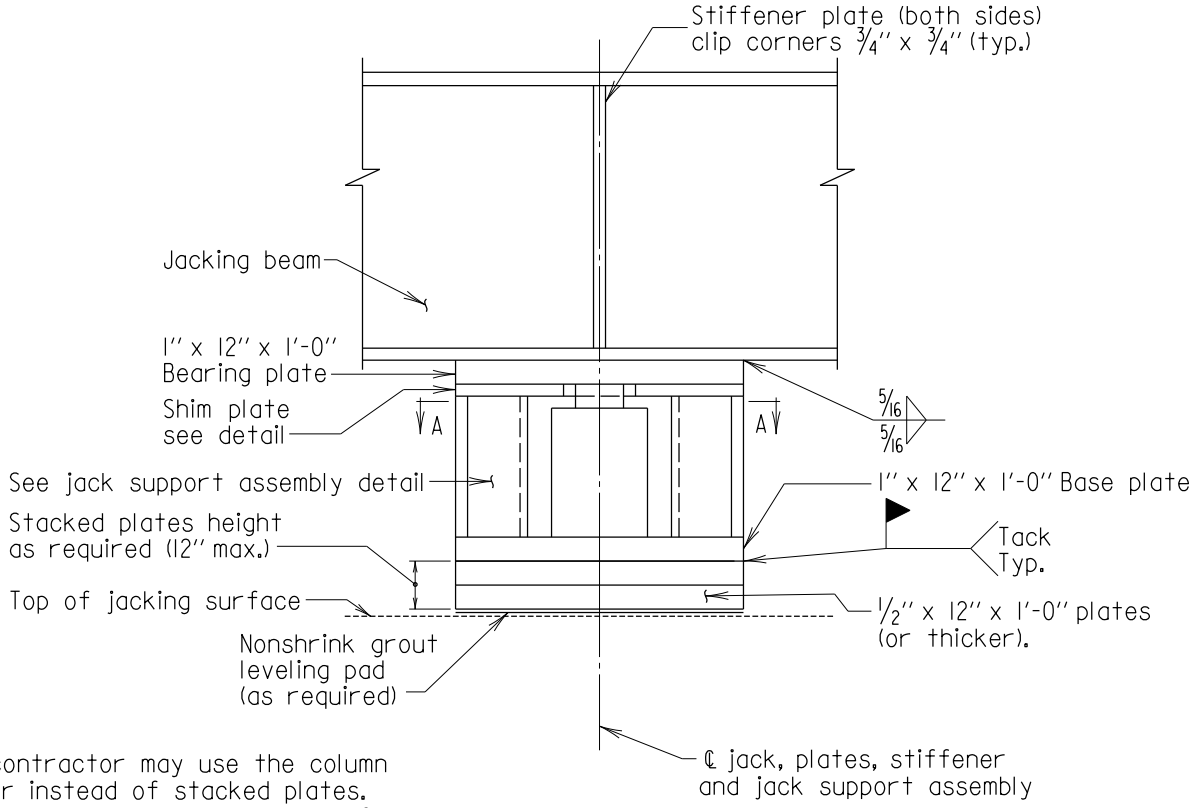

Note:
The contractor may use the column spacer instead of stacked plates. The column spacer shall be used for heights greater than 12" to a maximum of 5'-0" high.

ELEVATION

JACK SUPPORT USING STACKED PLATES

Scale : None

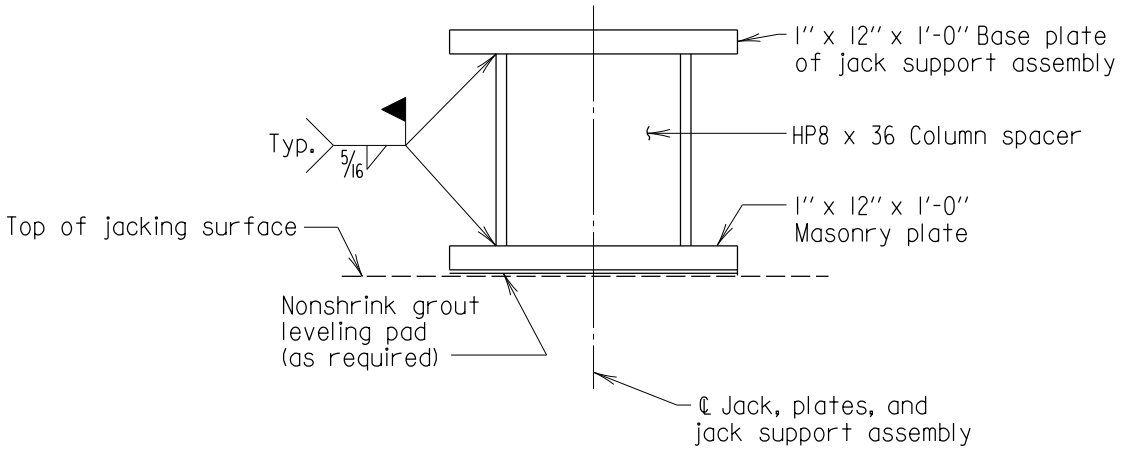

ELEVATION

ALTERNATE COLUMN SPACER DETAIL

Scale : None

Notes:
1. Minimum thickness of the grout leveling pad shall be as recommended by manufacturer.
2. Jack shall be centered under jacking beam web and stiffeners.
3. Stacked plates shall not exceed 12" high.
4. HP8 x 36 column spacer shall not exceed 5'-0" high.
5. All material to be ASTM A 709 Grade 36.

APPROVAL	
R.S. Freedman DIRECTOR OFFICE OF STRUCTURES DATE: 11/14/95	
REVISIONS	
SHA	FHWA
1-22-01	·
·	·
·	·
·	·

FHWA APPROVAL
DATE: .

STATE OF MARYLAND
DEPARTMENT OF TRANSPORTATION
STATE HIGHWAY ADMINISTRATION
OFFICE OF STRUCTURES

JACK SUPPORT ASSEMBLY

STANDARD NO. BR-SR(0.04)-95-307 SHEET 5 OF 6

STRUCTURAL REPAIRS

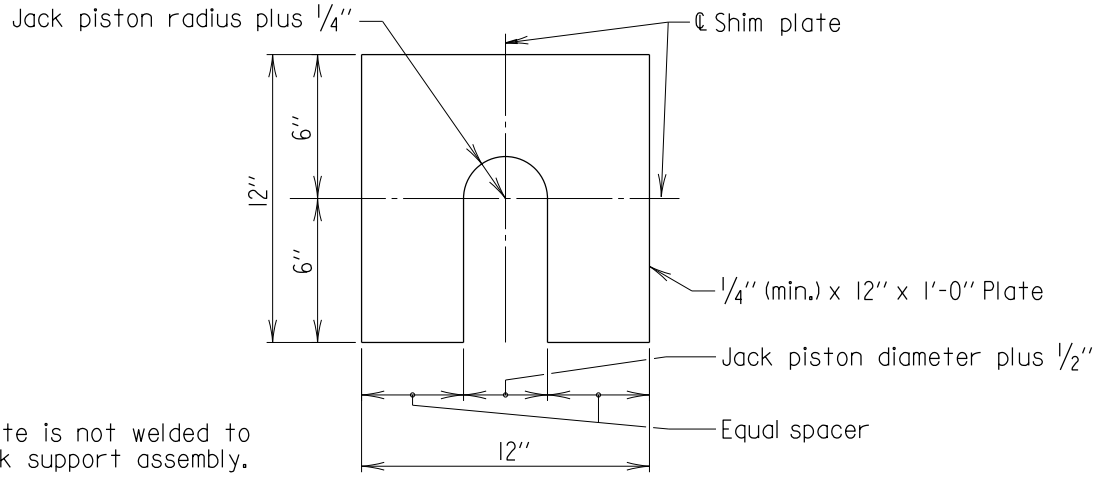

Note:
This plate is not welded to the jack support assembly.

SHIM PLATE DETAIL

Scale : None

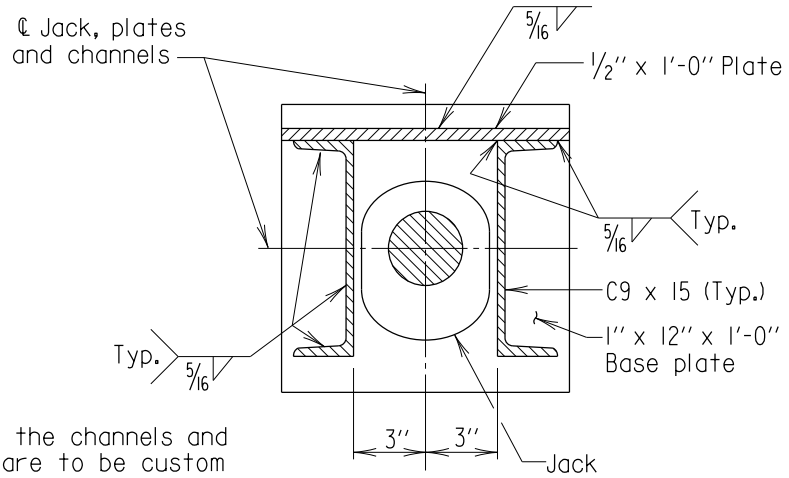

Note:
The length of the channels and the 1/2'' plate are to be custom fit to the jack being used.

SECTION A-A

Scale : None

APPROVAL	
R.S. Freedman DIRECTOR OFFICE OF STRUCTURES DATE: 11/14/95	
REVISIONS	
SHA	FHWA
.	.
.	.
.	.
.	.

FHWA APPROVAL
DATE: .

STATE OF MARYLAND
DEPARTMENT OF TRANSPORTATION
STATE HIGHWAY ADMINISTRATION
OFFICE OF STRUCTURES

DETAILS - JACK SUPPORT ASSEMBLY

STANDARD NO. BR-SR(0.04)-95-307

SHEET 6 OF 6

STRUCTURAL REPAIRS

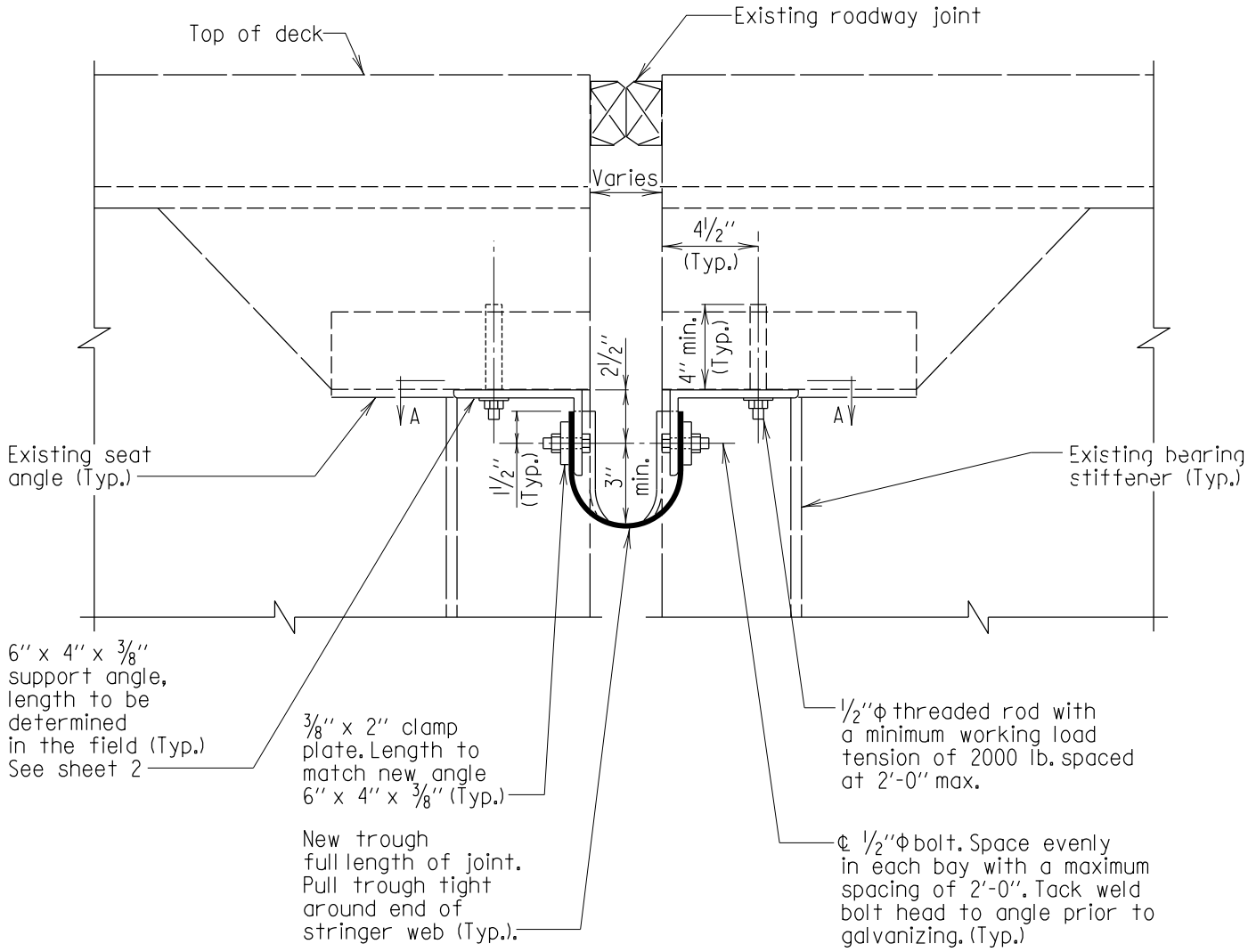

TROUGH DETAIL BETWEEN BEAMS AT PIER

Scale: 1 1/2" = 1'-0"

Notes:

1. All steel shall be galvanized ASTM A 709 Grade 36.
2. Trough shall conform to 911.11.
3. Trough cross slope shall be a minimum of 1" per foot for finger joints. All other joints shall follow the grade of the end diaphragms or 1/4" per foot slope whichever is greater.
4. All hardware shall be stainless steel Type 304.
5. Drilled holes for threaded rods shall be 1/2" larger.
6. → Grout shall conform to 902.11(c).
7. Fiberglass shall conform to 921.11.

APPROVAL	
E.S. Freedman DIRECTOR OFFICE OF STRUCTURES	
DATE: 11/14/95	
REVISIONS	
SHA	FHWA
1-23-97	·
1-22-01	·
1-18-05	·
7-14-08	·

FHWA APPROVAL
DATE: .

STATE OF MARYLAND
DEPARTMENT OF TRANSPORTATION
STATE HIGHWAY ADMINISTRATION
OFFICE OF STRUCTURES

DRAINAGE TROUGH DETAIL AT PIER
FOR EXISTING STRUCTURE

STANDARD NO. BR-SR(0.05)-95-308 SHEET 1 OF 8

STRUCTURAL REPAIRS

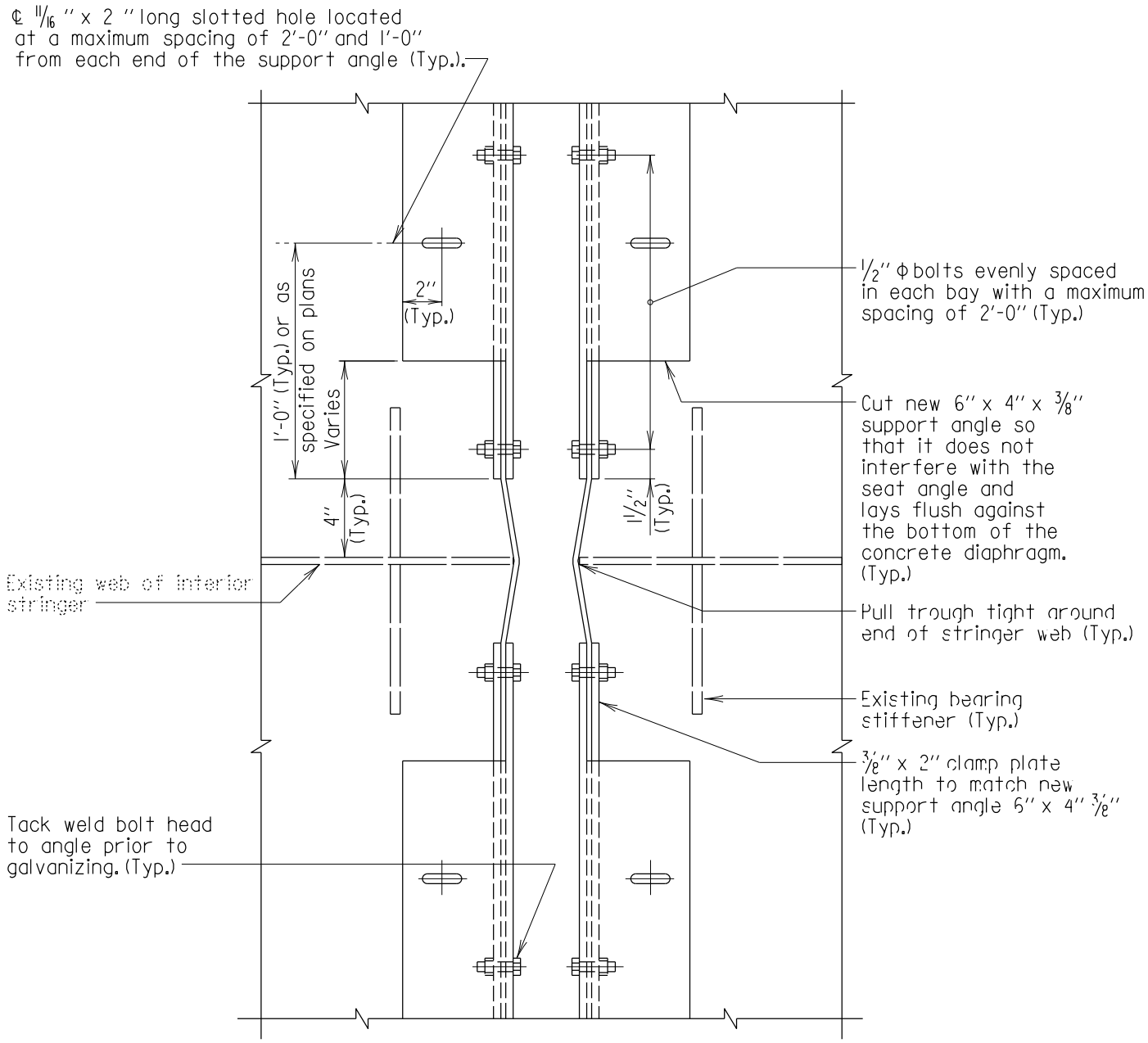

SECTION A-A

Scale: 1 1/2" = 1'-0"

Note:
Existing seat angle not shown for clarity.

APPROVAL	
R.S. Friedman DIRECTOR OFFICE OF STRUCTURES DATE: 11/14/95	
REVISIONS	
SHA	FHWA
1-23-97	·
7-30-99	·
FHWA APPROVAL	· ·
DATE: .	· ·

STATE OF MARYLAND
DEPARTMENT OF TRANSPORTATION
STATE HIGHWAY ADMINISTRATION
OFFICE OF STRUCTURES

DRAINAGE TROUGH DETAIL AT PIER FOR EXISTING STRUCTURE

STANDARD NO. BR-SR(0.05)-95-308 SHEET 2 OF 8

STRUCTURAL REPAIRS

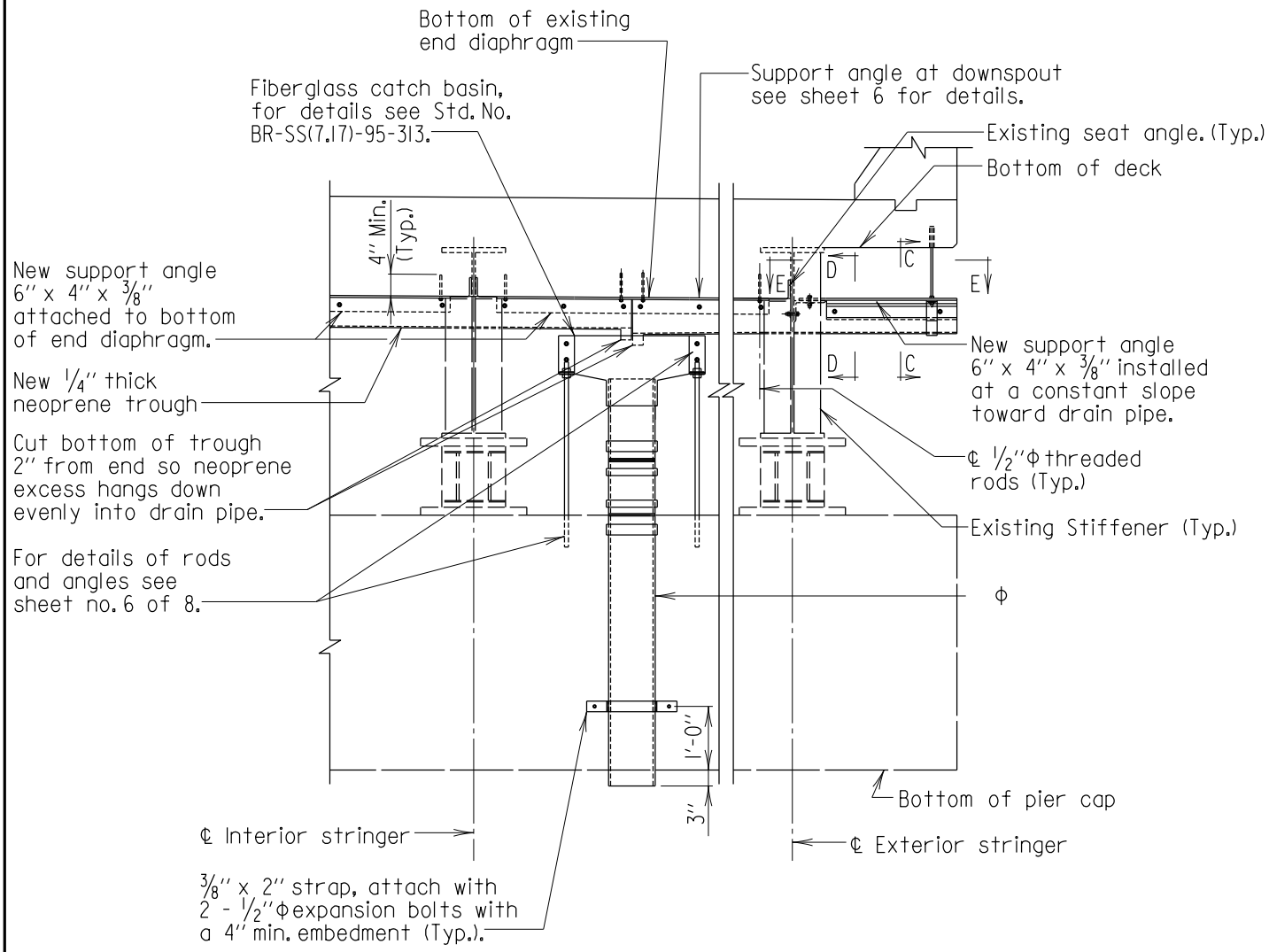

DOWNSPOUT DETAIL BETWEEN BEAMS AT PIER

Scale: 3/8'' = 1'-0''

Note:
1. For location of downspout refer to the General Plan and Elevation.
2. Refer to M(6.04)-80-119 for splash block requirements.

APPROVAL	
E.S. Freedman DIRECTOR OFFICE OF STRUCTURES DATE: 11/14/95	
REVISIONS	
SHA	FHWA
1-23-97	·
7-24-01	·
7-14-08	·
·	·

FHWA APPROVAL
DATE: .

STATE OF MARYLAND
DEPARTMENT OF TRANSPORTATION
STATE HIGHWAY ADMINISTRATION
OFFICE OF STRUCTURES

DRAINAGE TROUGH DETAIL AT PIER FOR EXISTING STRUCTURE

STANDARD NO. BR-SR(0.05)-95-308 SHEET 3 OF 8

STRUCTURAL REPAIRS

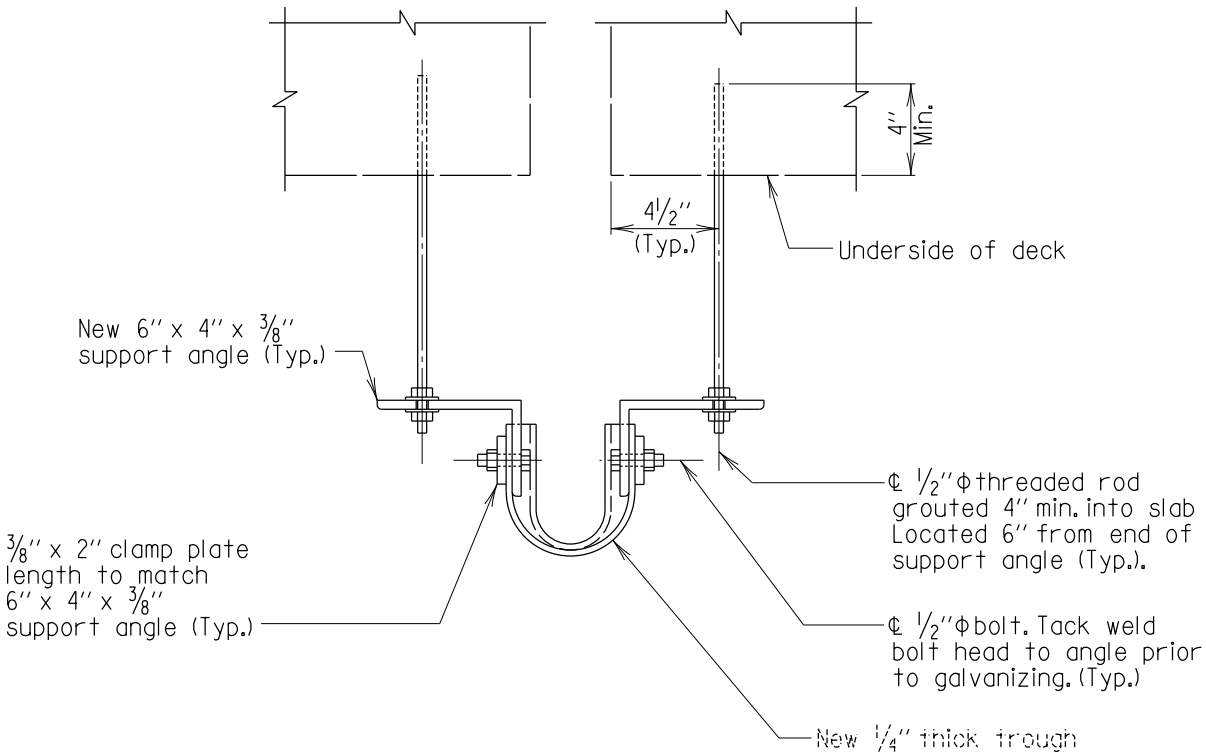

SECTION C-C

Scale: 1 1/2'' = 1'-0''

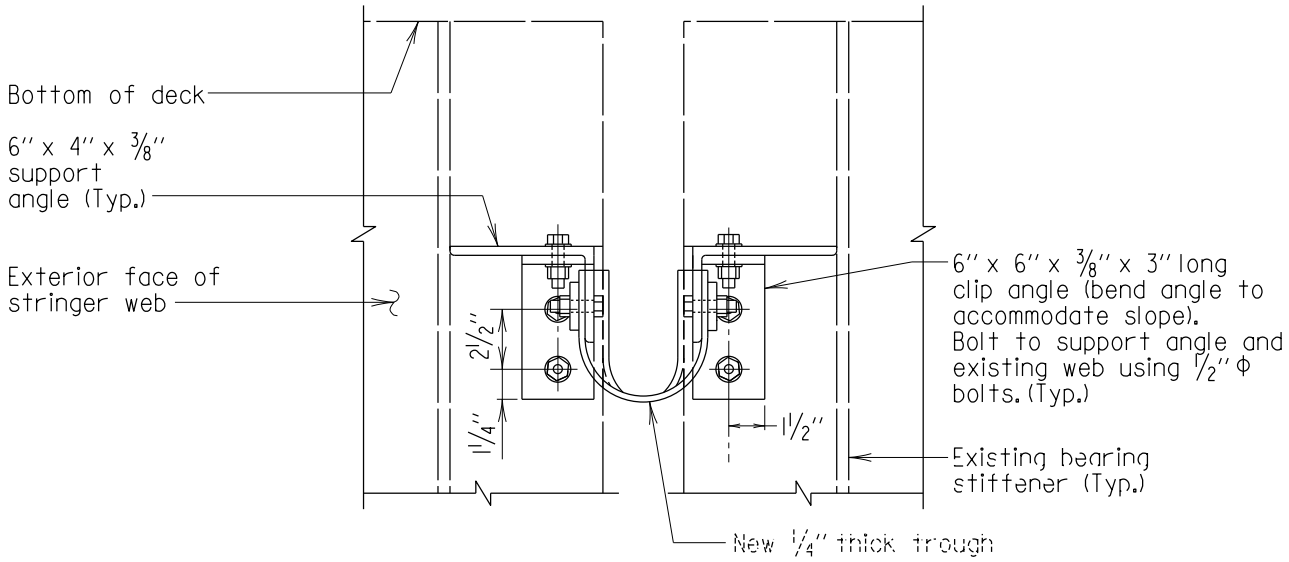

SECTION D-D

Scale: 1 1/2'' = 1'-0''

APPROVAL		
R.S. Freedman DIRECTOR OFFICE OF STRUCTURES DATE: 11/14/95		
REVISIONS		
SHA	FHWA	
1-23-97	·	
1-22-01	·	
FHWA APPROVAL	·	·
DATE: .	·	·

STATE OF MARYLAND
DEPARTMENT OF TRANSPORTATION
STATE HIGHWAY ADMINISTRATION
OFFICE OF STRUCTURES

DRAINAGE TROUGH DETAIL AT PIER
FOR EXISTING STRUCTURE

STANDARD NO. BR-SR(0.05)-95-308 SHEET 4 OF 8

STRUCTURAL REPAIRS

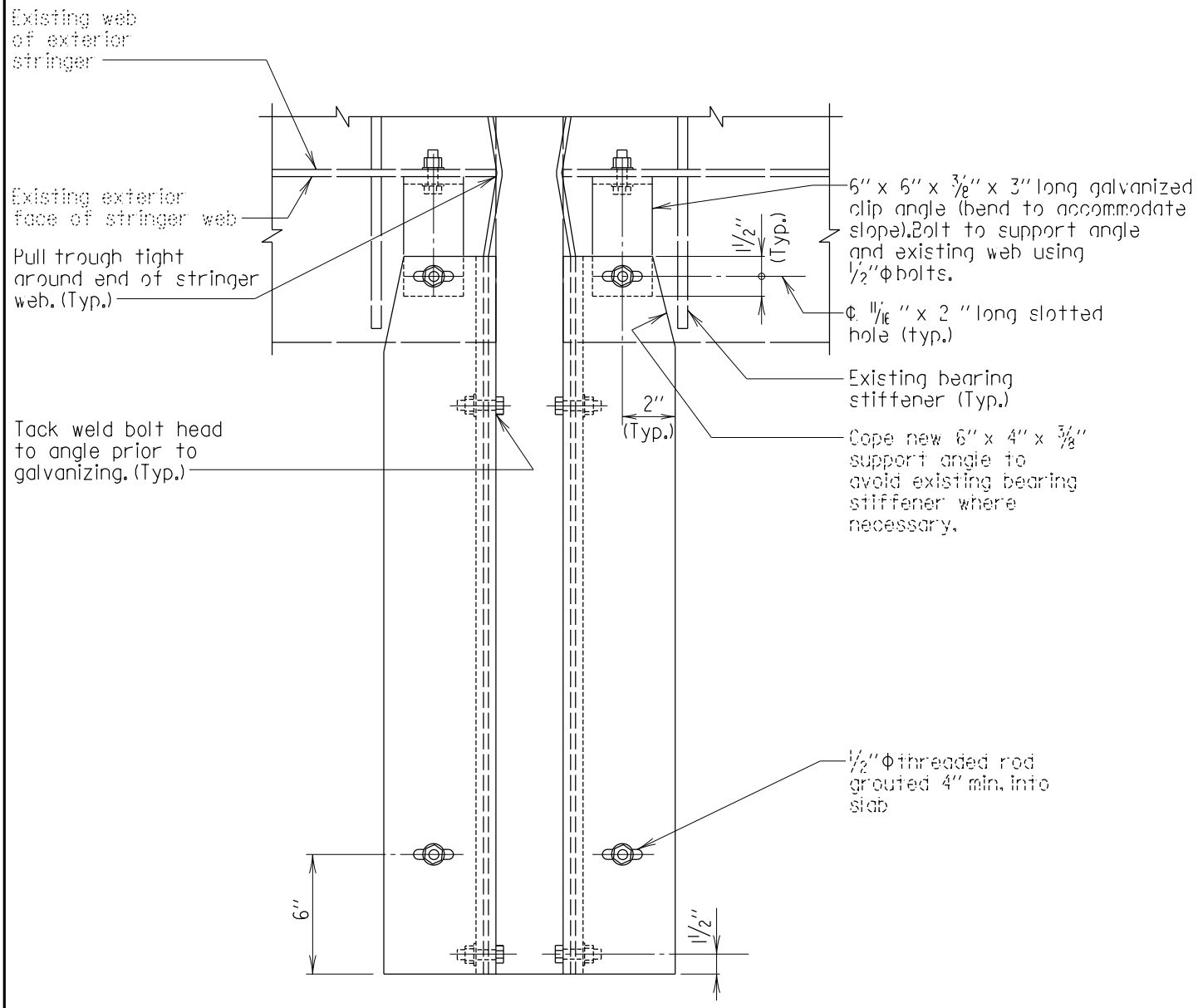

SECTION E-E

Scale: 1 1/2" = 1'-0"

Note:
Existing seat angle not shown for clarity.

APPROVAL	
R.S. Freedman DIRECTOR OFFICE OF STRUCTURES DATE: 11/14/95	
REVISIONS	
SHA	FHWA
1-23-97	·
1-22-01	·
FHWA APPROVAL	· ·
DATE: .	· ·

STATE OF MARYLAND
DEPARTMENT OF TRANSPORTATION
STATE HIGHWAY ADMINISTRATION
OFFICE OF STRUCTURES

DRAINAGE TROUGH DETAIL AT PIER FOR EXISTING STRUCTURE

STANDARD NO. BR-SR(0.05)-95-308 SHEET 5 OF 8

STRUCTURAL REPAIRS

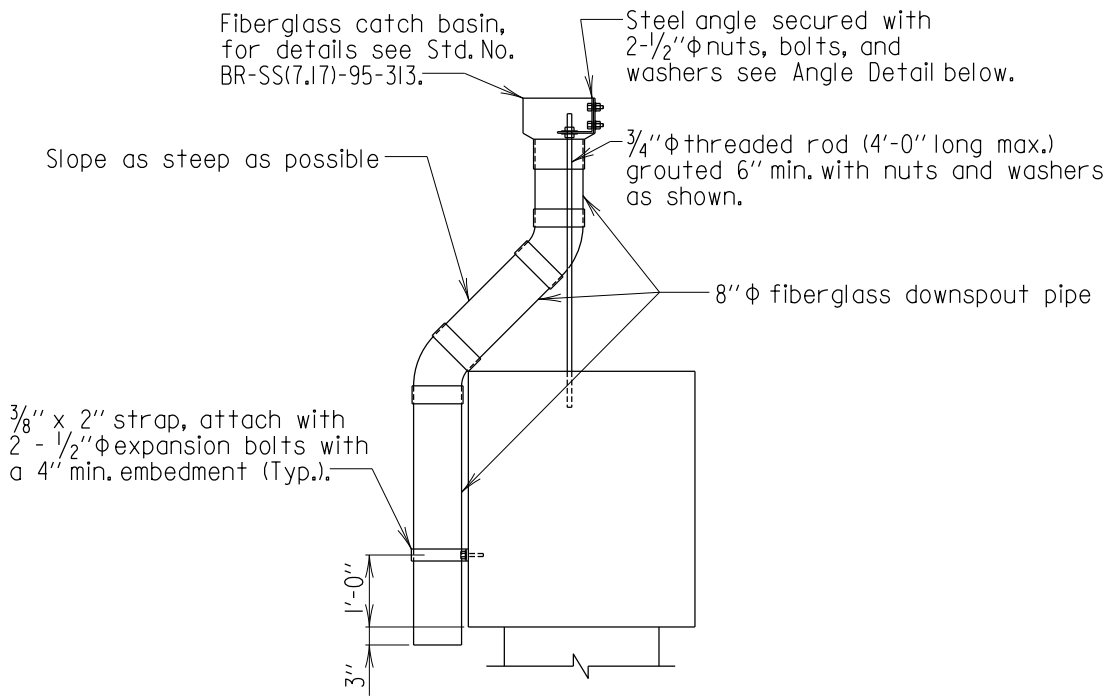

DOWNSPOUT DETAIL FOR PIER CAPS

Scale: 3/8" = 1'-0"

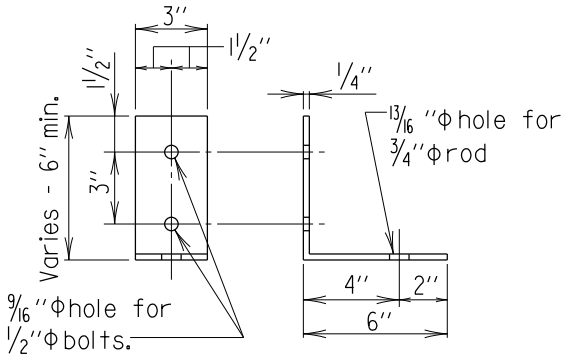

ANGLE DETAIL

Scale: 1 1/2" = 1'-0"

APPROVAL		
R.S. Freedman DIRECTOR OFFICE OF STRUCTURES DATE: 11/14/95		
REVISIONS		
SHA	FHWA	
1-23-97	·	
11-17-97	·	
7-14-08	·	
·	·	

FHWA APPROVAL
DATE: .

STATE OF MARYLAND
DEPARTMENT OF TRANSPORTATION
STATE HIGHWAY ADMINISTRATION
OFFICE OF STRUCTURES

DRAINAGE TROUGH DETAIL AT PIER FOR EXISTING STRUCTURE

STANDARD NO. BR-SR(0.05)-95-308

SHEET 6 OF 8

STRUCTURAL REPAIRS

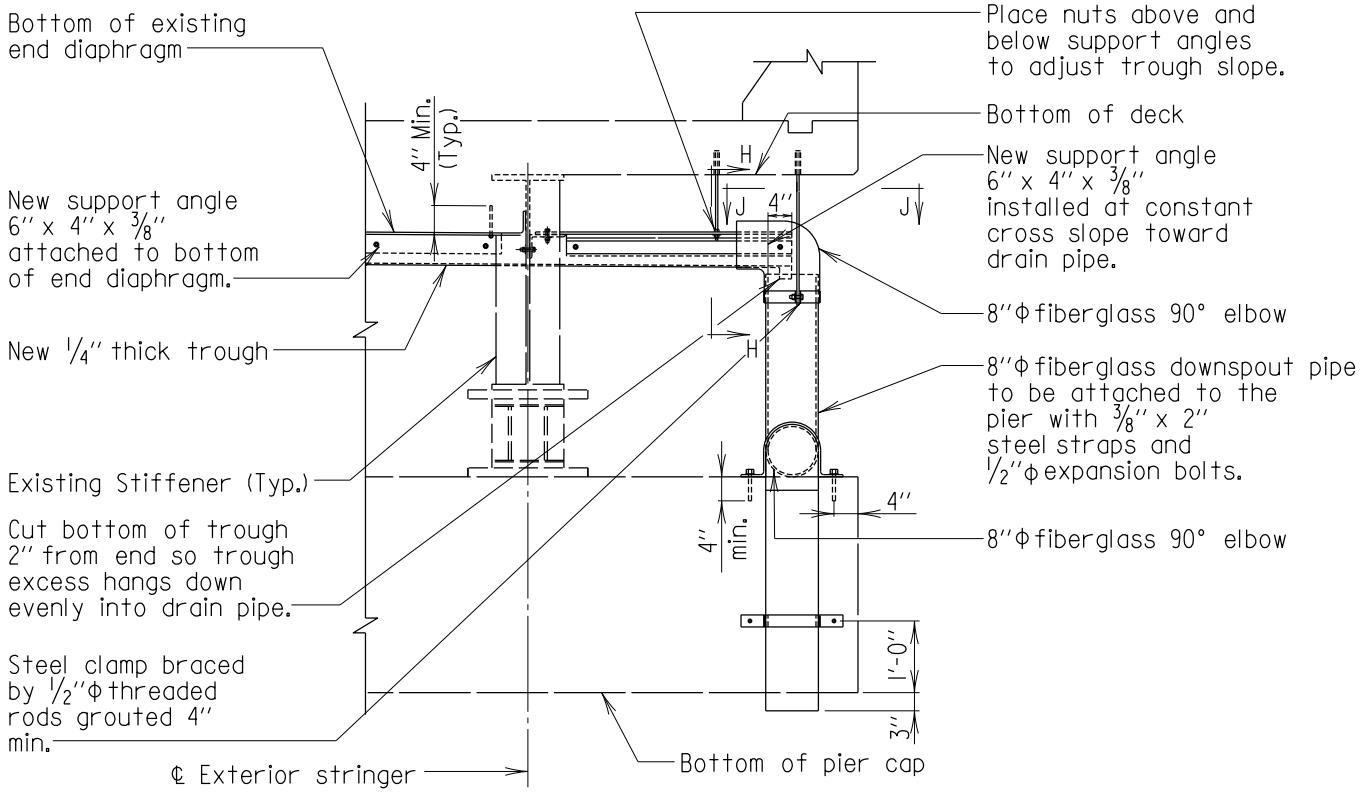

ALTERNATE DOWNSPOUT DETAIL AT PIER

Scale: 3/8'' = 1'-0''

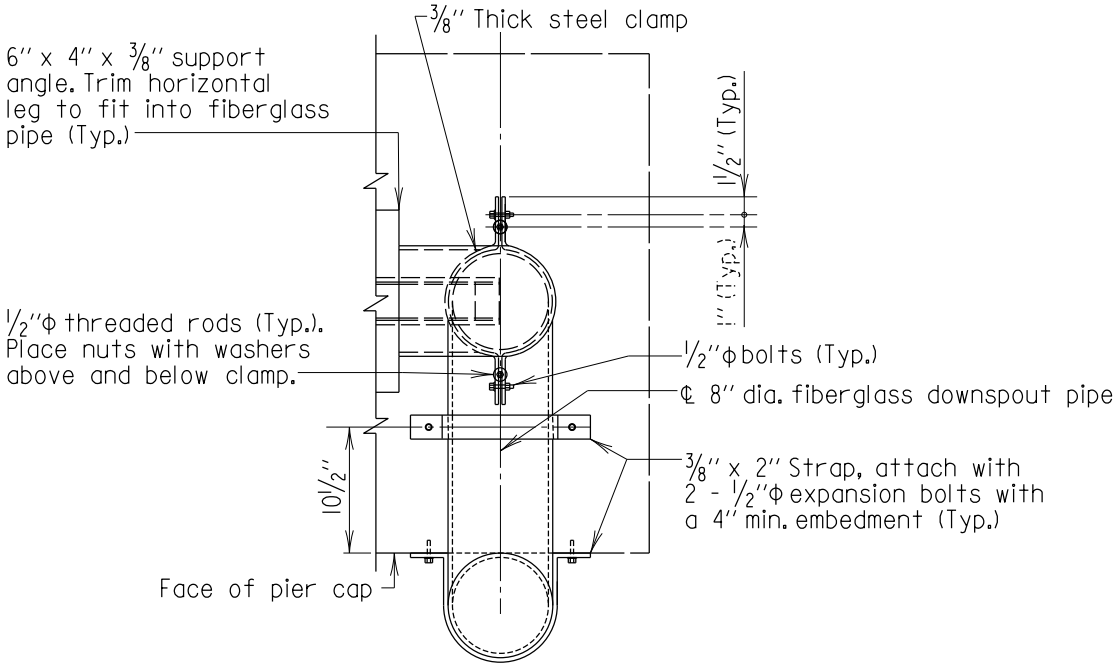

SECTION J-J

Scale: 3/4'' = 1'-0''

APPROVAL		
R.S. Freedman DIRECTOR OFFICE OF STRUCTURES DATE: 11/14/95		
REVISIONS		
SHA	FHWA	
1-23-97	·	
1-22-01	·	
7-14-08	·	
·	·	

FHWA APPROVAL
DATE: .

STATE OF MARYLAND
DEPARTMENT OF TRANSPORTATION
STATE HIGHWAY ADMINISTRATION
OFFICE OF STRUCTURES

DRAINAGE TROUGH DETAIL AT PIER FOR EXISTING STRUCTURE

STANDARD NO. BR-SR(0.05)-95-308 SHEET 7 OF 8

STRUCTURAL REPAIRS

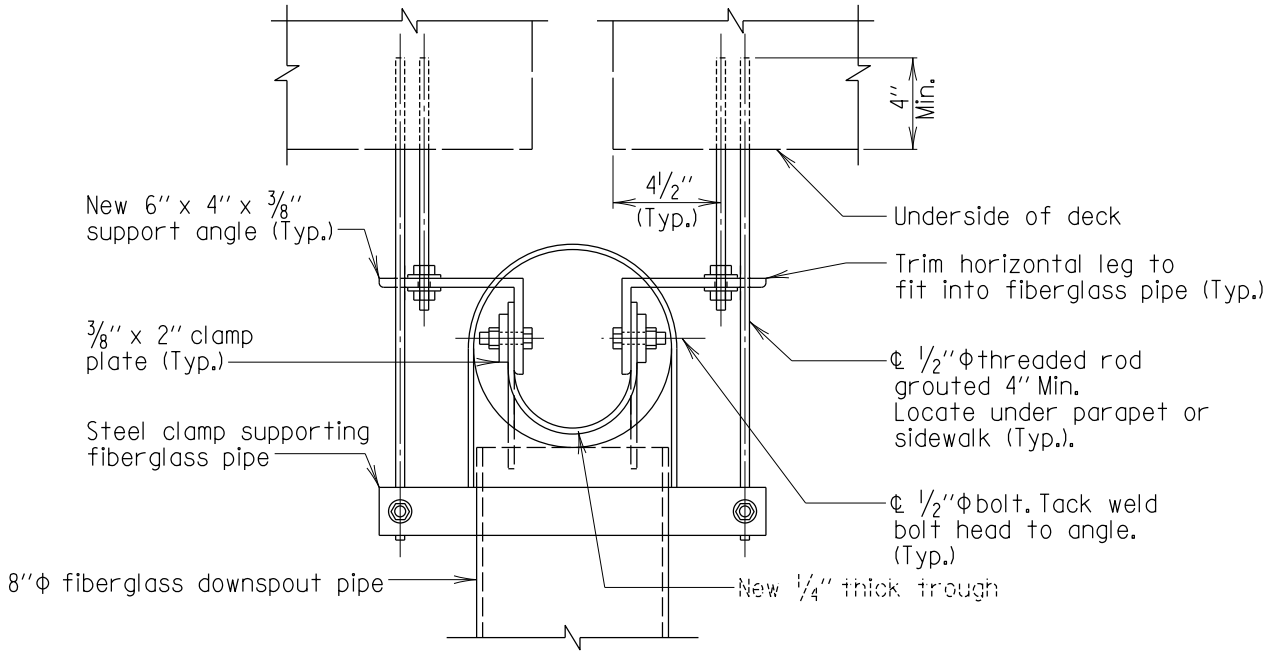

SECTION H-H

Scale: 1 1/2'' = 1'-0''

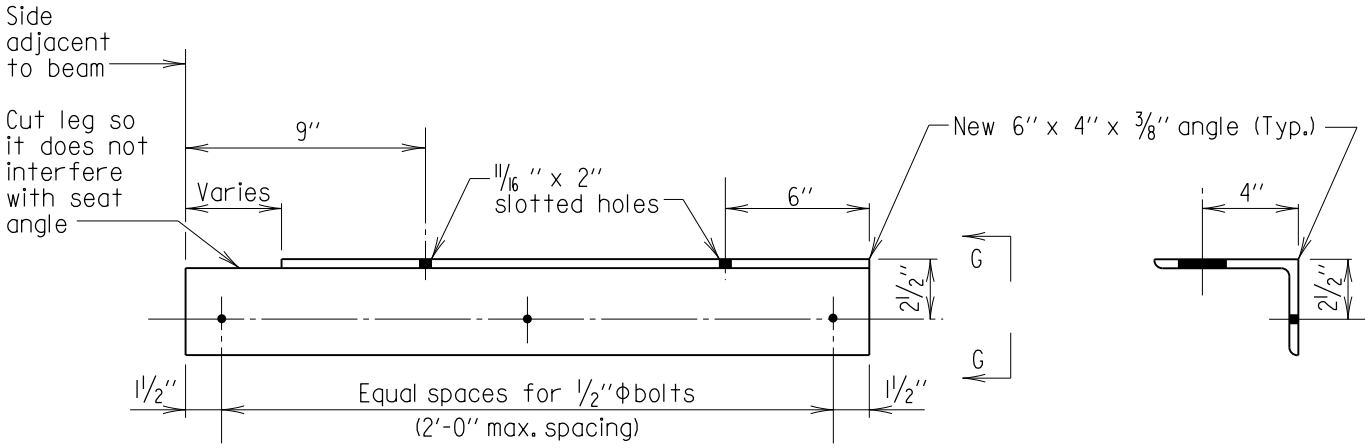

SUPPORT ANGLE AT DOWNSPOUT

Scale: 1 1/2'' = 1'-0''

VIEW G-G

Scale: 1 1/2'' = 1'-0''

Note:
Length of support angle to be determined in the field.

APPROVAL	
E.S. Freedman DIRECTOR OFFICE OF STRUCTURES DATE: 11/14/95	
REVISIONS	
SHA	FHWA
1-23-97	·
1-22-01	·
7-14-08	·
·	·

FHWA APPROVAL
DATE: .

STATE OF MARYLAND
DEPARTMENT OF TRANSPORTATION
STATE HIGHWAY ADMINISTRATION
OFFICE OF STRUCTURES

DRAINAGE TROUGH DETAIL AT PIER
FOR EXISTING STRUCTURE

STANDARD NO. BR-SR(0.05)-95-308 SHEET 8 OF 8

STRUCTURAL REPAIRS

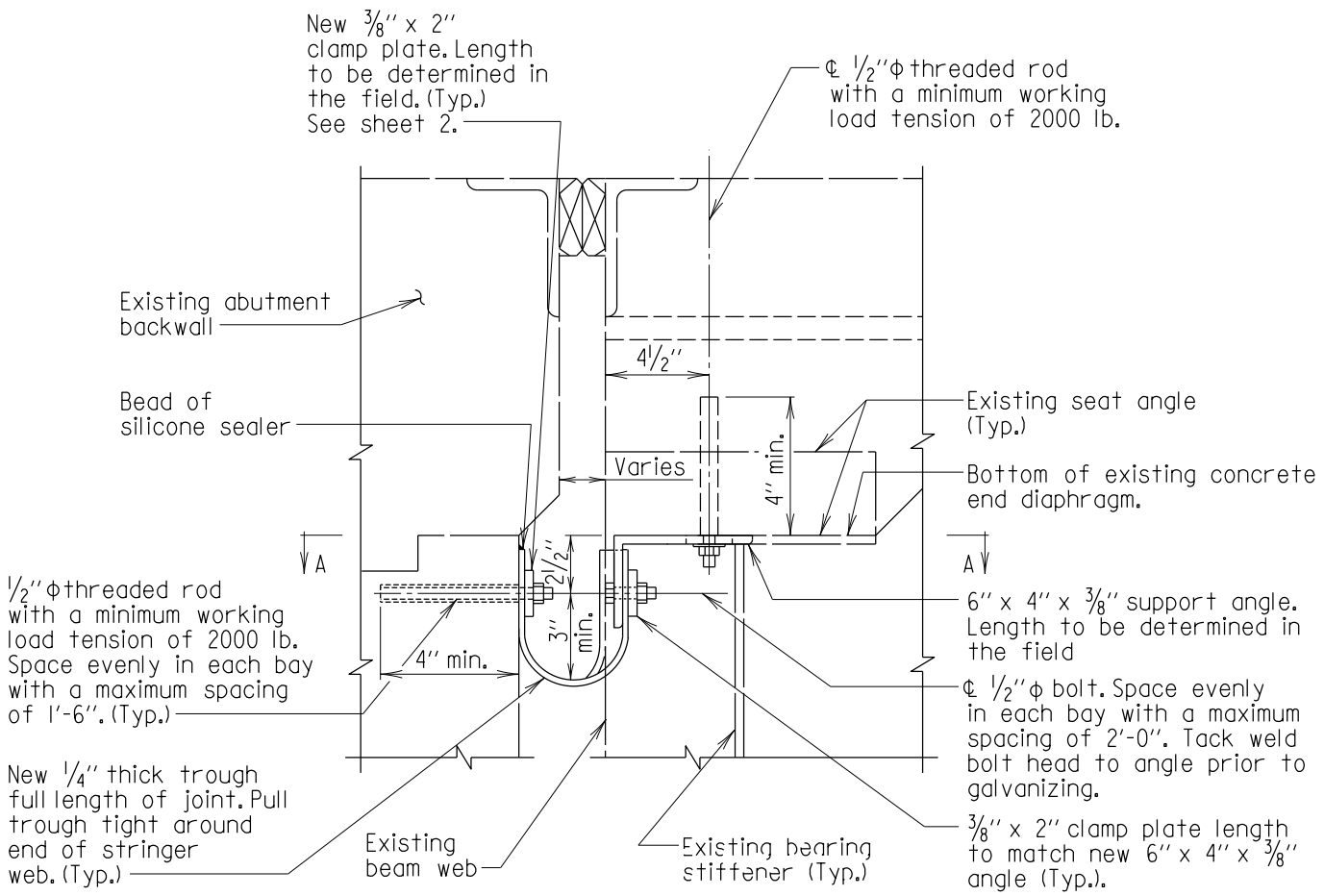

TROUGH DETAIL BETWEEN BEAMS AT ABUTMENT

Scale: 1 1/2" = 1'-0"

Notes:

1. All steel shall be galvanized ASTM A 709 Grade 36.
2. Trough shall conform to 911.11 or 911.12.
3. Trough cross slope shall be a minimum of 1" per foot for finger joints. All other joints shall follow the grade of the end diaphragms or 1/4" per foot slope whichever is greater.
4. All hardware shall be stainless steel Type 304.
5. Drilled holes for threaded rods shall be 1/2" larger.
6. Grout shall conform to 902.11 (c).
7. → Fiberglass shall conform to 921.11.
8. Silicone sealer shall conform to 911.01.01.

APPROVAL	
R.S. Freedman DIRECTOR OFFICE OF STRUCTURES DATE: 11/14/95	
REVISIONS	
SHA	FHWA
1-23-97	·
9-15-98	·
1-22-01	·
7-14-08	·

FHWA APPROVAL
DATE: .

STATE OF MARYLAND
DEPARTMENT OF TRANSPORTATION
STATE HIGHWAY ADMINISTRATION
OFFICE OF STRUCTURES

DRAINAGE TROUGH DETAIL AT ABUTMENT FOR EXISTING STRUCTURE

STANDARD NO. BR-SR(0.06)-95-309 SHEET 1 OF 7

STRUCTURAL REPAIRS

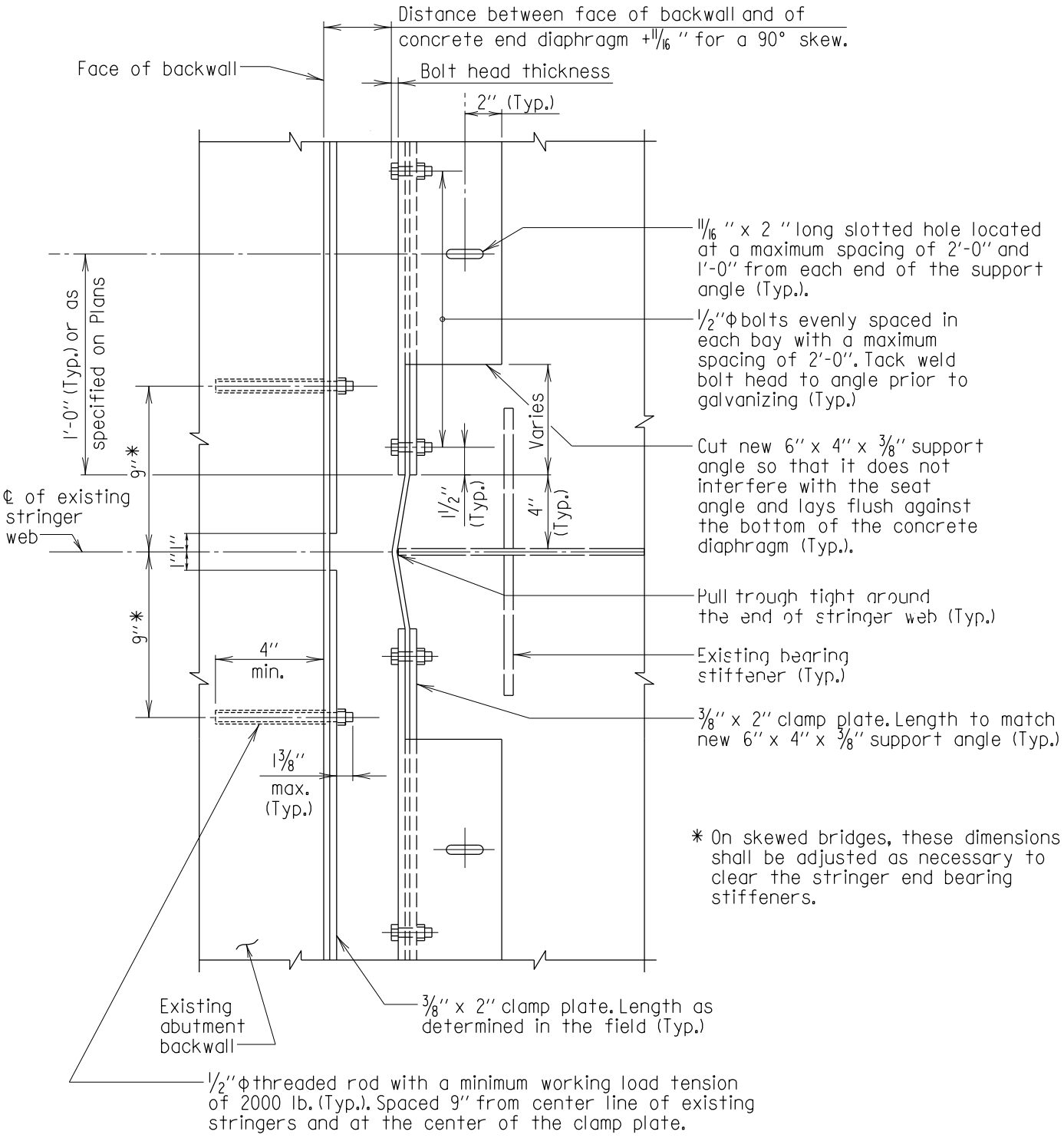

SECTION A-A

Scale: 1 1/2" = 1'-0"

Note:
Existing seat angle not shown for clarity.

APPROVAL	
E.S. Freedman DIRECTOR OFFICE OF STRUCTURES DATE: 11/14/95	
REVISIONS	
SHA	FHWA
1-23-97	·
7-30-99	·
1-22-01	·
·	·

FHWA APPROVAL
DATE: .

STATE OF MARYLAND
DEPARTMENT OF TRANSPORTATION
STATE HIGHWAY ADMINISTRATION
OFFICE OF STRUCTURES

DRAINAGE TROUGH DETAIL AT ABUTMENT FOR EXISTING STRUCTURE

STANDARD NO. BR-SR(0.06)-95-309 SHEET 2 OF 7

STRUCTURAL REPAIRS

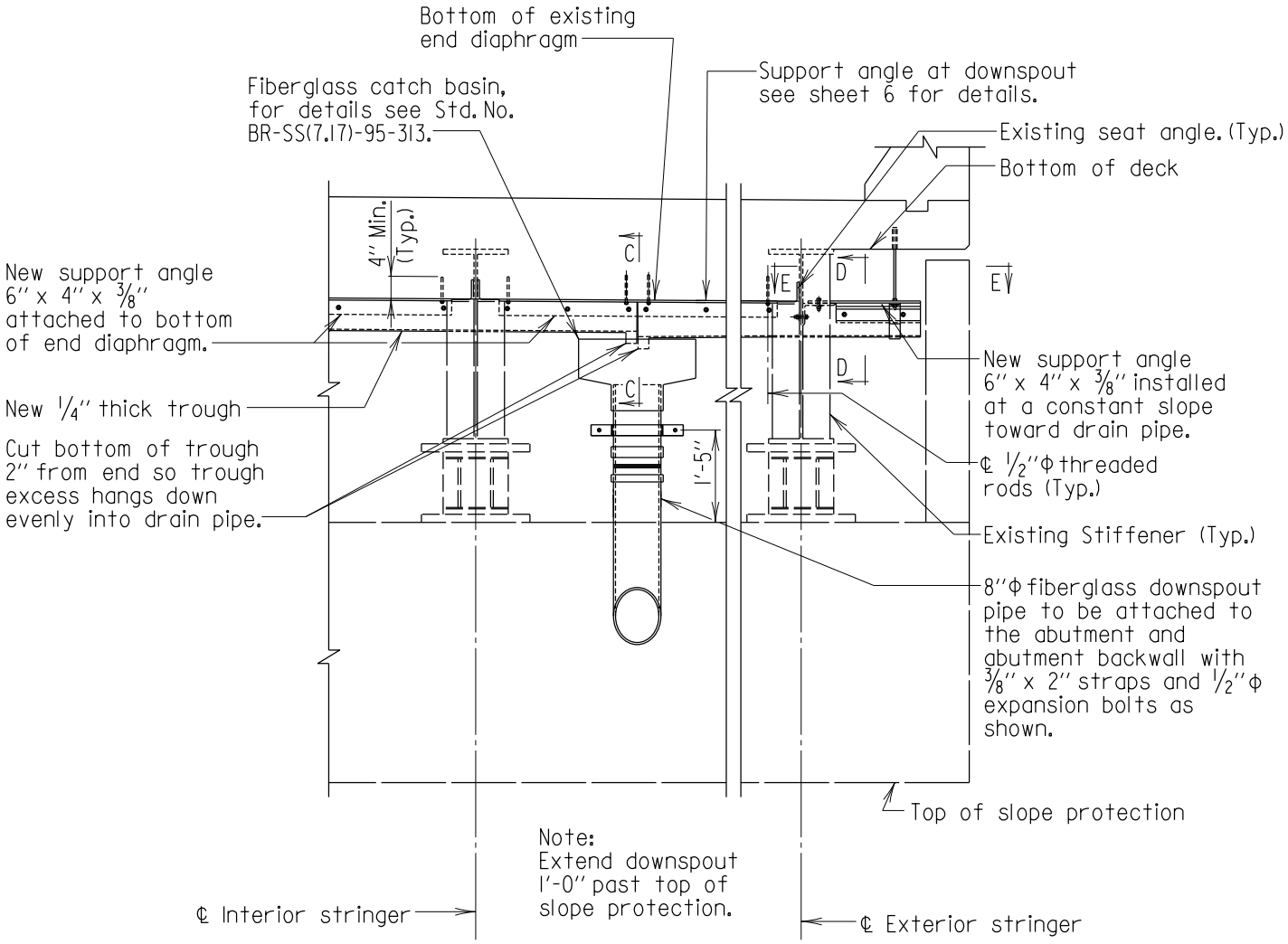

DOWNSPOUT DETAIL BETWEEN BEAMS AT ABUTMENT

Scale: 3/8'' = 1'-0''

APPROVAL		
R.S. Freedman DIRECTOR OFFICE OF STRUCTURES DATE: 11/14/95		
REVISIONS		
SHA	FHWA	
1-23-97	·	
1-22-01	·	
7-14-08	·	
·	·	

FHWA APPROVAL
DATE: .

STATE OF MARYLAND
DEPARTMENT OF TRANSPORTATION
STATE HIGHWAY ADMINISTRATION
OFFICE OF STRUCTURES

DRAINAGE TROUGH DETAIL AT ABUTMENT FOR EXISTING STRUCTURE

STANDARD NO. BR-SR(0.06)-95-309 SHEET 3 OF 7

STRUCTURAL REPAIRS

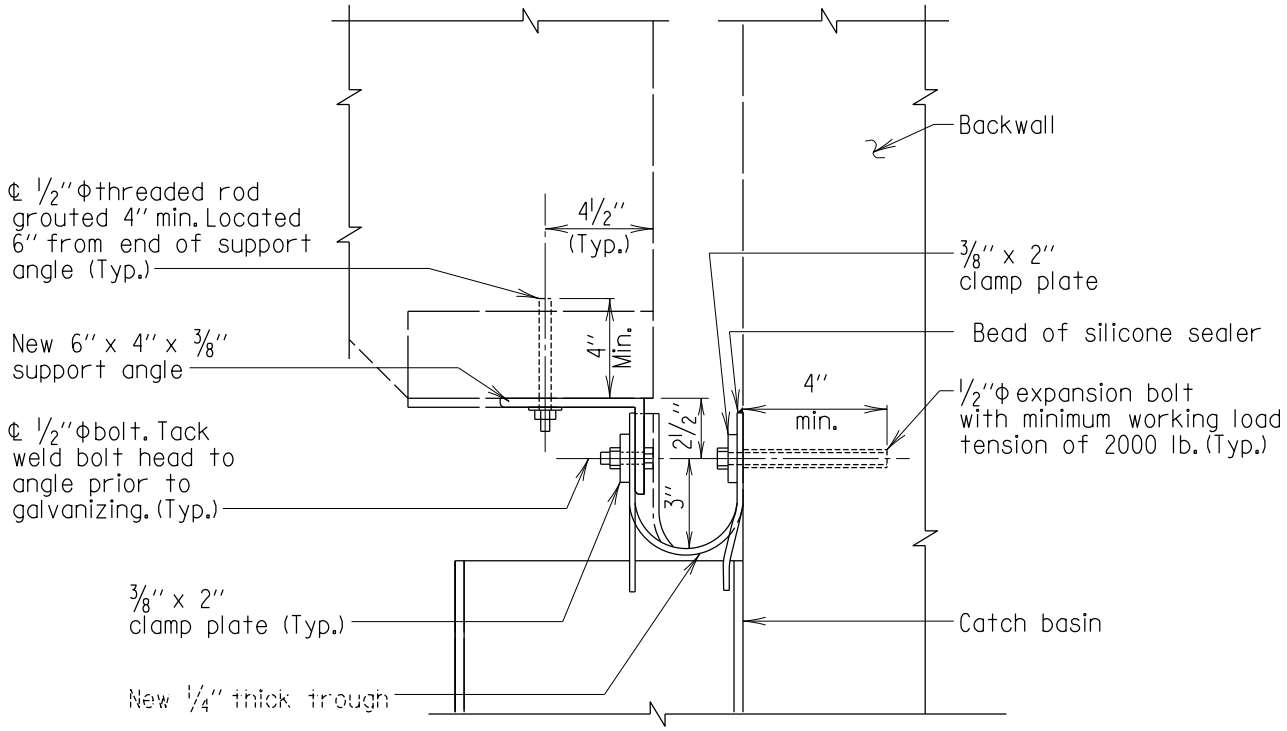

SECTION C-C

Scale: 1 1/2" = 1'-0"

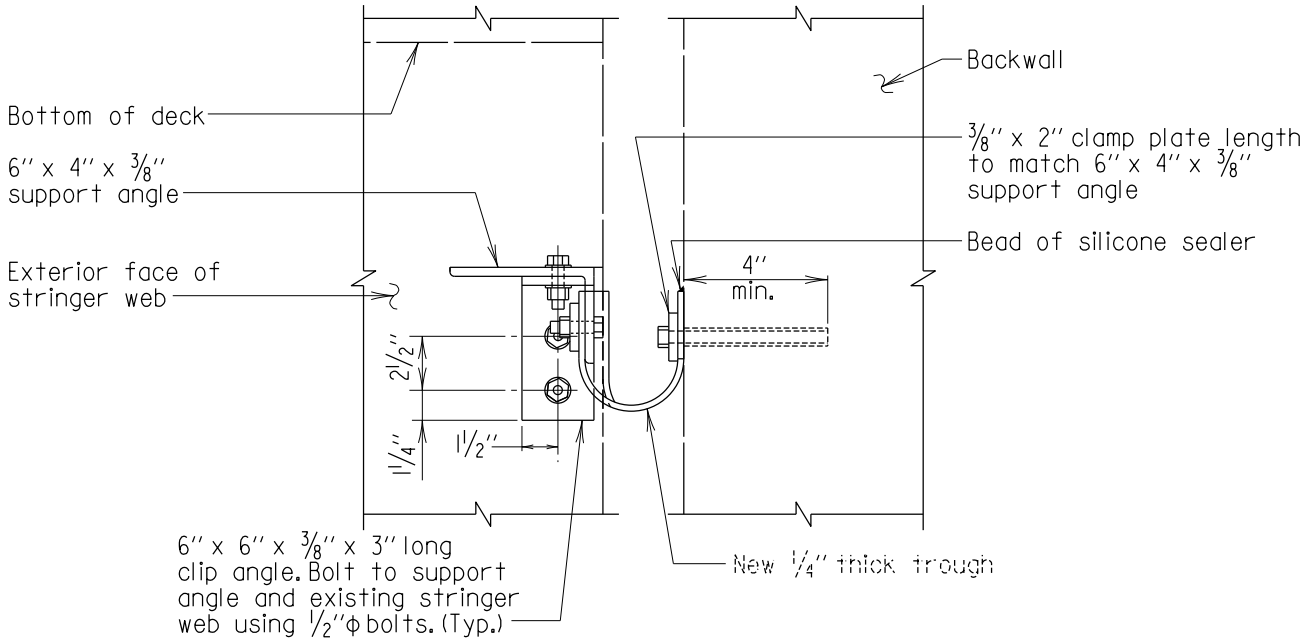

SECTION D-D

Scale: 1 1/2" = 1'-0"

APPROVAL		
R.S. Freedman DIRECTOR OFFICE OF STRUCTURES DATE: 11/14/95		
REVISIONS		
	SHA	FHWA
	1-23-97	·
	9-15-98	·
FHWA APPROVAL	1-22-01	·
DATE: .	·	·

STATE OF MARYLAND
DEPARTMENT OF TRANSPORTATION
STATE HIGHWAY ADMINISTRATION
OFFICE OF STRUCTURES

DRAINAGE TROUGH DETAIL AT ABUTMENT FOR EXISTING STRUCTURE

STANDARD NO. BR-SR(0.06)-95-309

SHEET 4 OF 7

STRUCTURAL REPAIRS

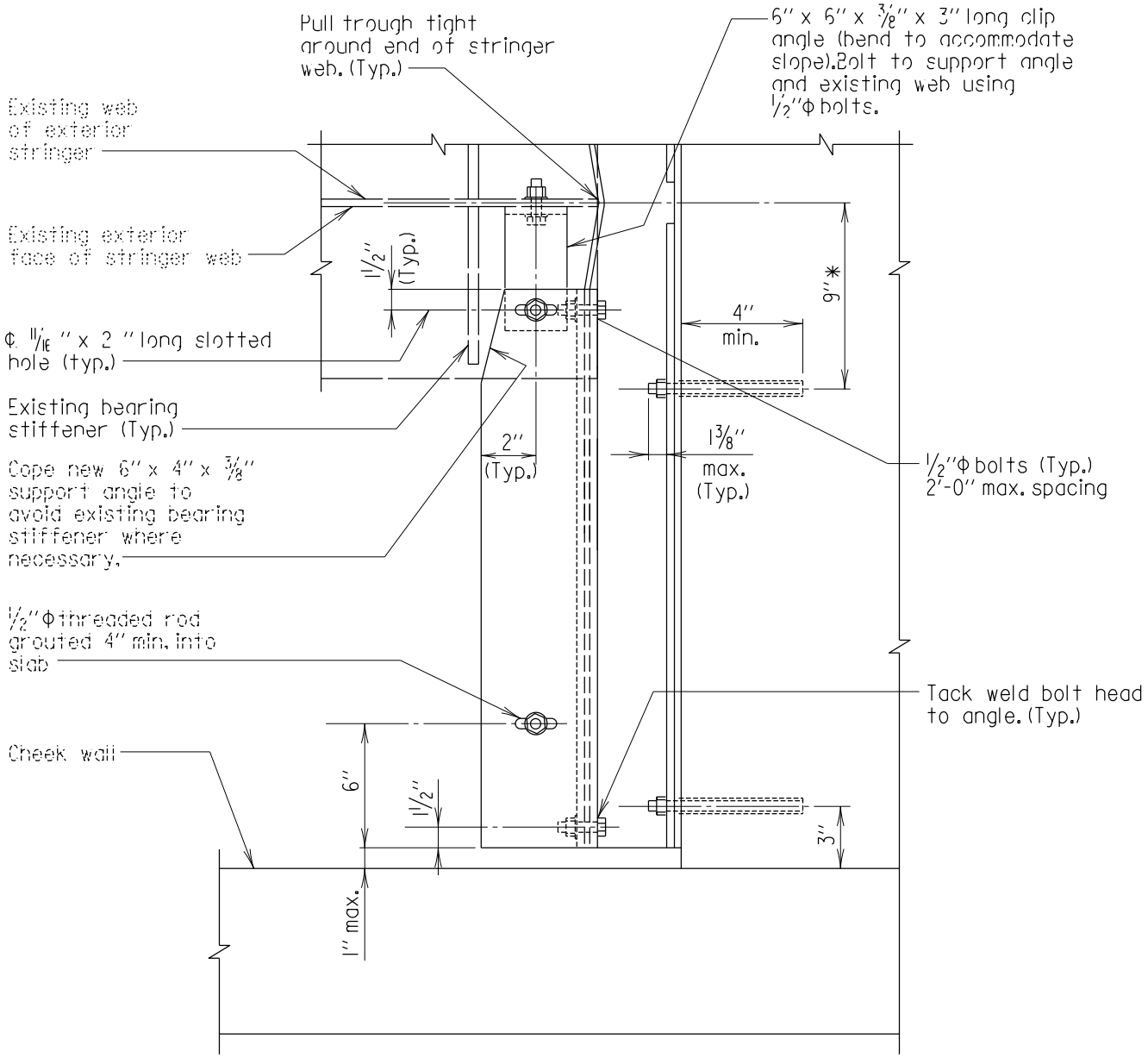

SECTION E-E

Scale: 1 1/2" = 1'-0"

* On skewed bridges, these dimensions shall be adjusted as necessary to clear the stringer end bearing stiffeners.

Note:
Existing interior seat angle not shown for clarity.

APPROVAL	
R.S. Freedman DIRECTOR OFFICE OF STRUCTURES DATE: 11/14/95	
REVISIONS	
SHA	FHWA
1-23-97	·
1-22-01	·
FHWA APPROVAL	·
DATE: .	·

STATE OF MARYLAND
DEPARTMENT OF TRANSPORTATION
STATE HIGHWAY ADMINISTRATION
OFFICE OF STRUCTURES

DRAINAGE TROUGH DETAIL AT ABUTMENT FOR EXISTING STRUCTURE

STANDARD NO. BR-SR(0.06)-95-309 SHEET 5 OF 7

STRUCTURAL REPAIRS

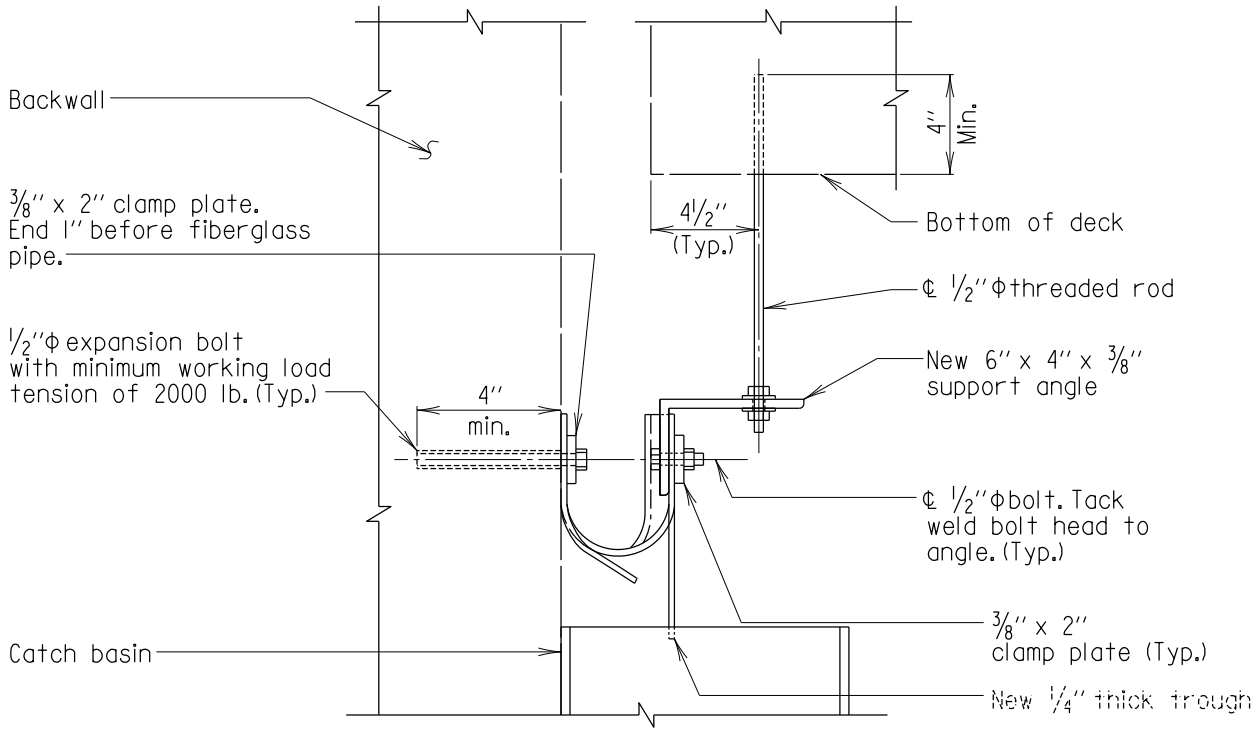

SECTION H-H

Scale: 1 1/2'' = 1'-0''

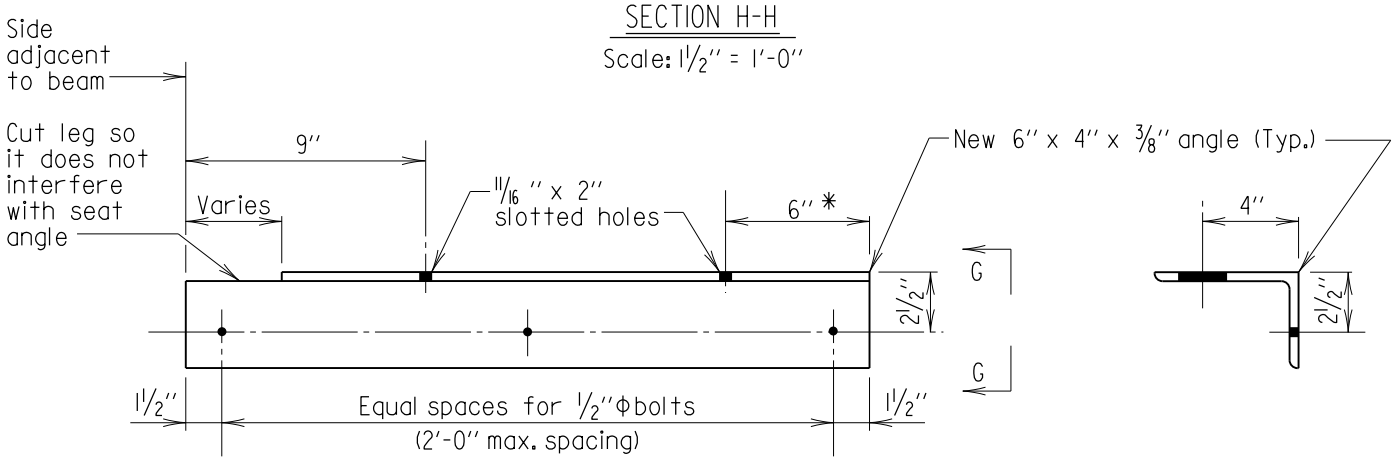

SUPPORT ANGLE AT DOWNSPOUT

Scale: 1 1/2'' = 1'-0''

VIEW G-G

Scale: 1 1/2'' = 1'-0''

* When installed on the exterior, adjust to miss the elbow by 1 1/2''.

Note:
Length to be determined in the field.

APPROVAL		
E.S. Freedman DIRECTOR OFFICE OF STRUCTURES DATE: 11/14/95		
REVISIONS		
	SHA	FHWA
	1-23-97	·
	1-22-01	·
FHWA APPROVAL	7-14-08	·
DATE: .	·	·

STATE OF MARYLAND
DEPARTMENT OF TRANSPORTATION
STATE HIGHWAY ADMINISTRATION
OFFICE OF STRUCTURES

DRAINAGE TROUGH DETAIL AT ABUTMENT FOR EXISTING STRUCTURE

STANDARD NO. BR-SR(0.06)-95-309

SHEET 6 OF 7

STRUCTURAL REPAIRS

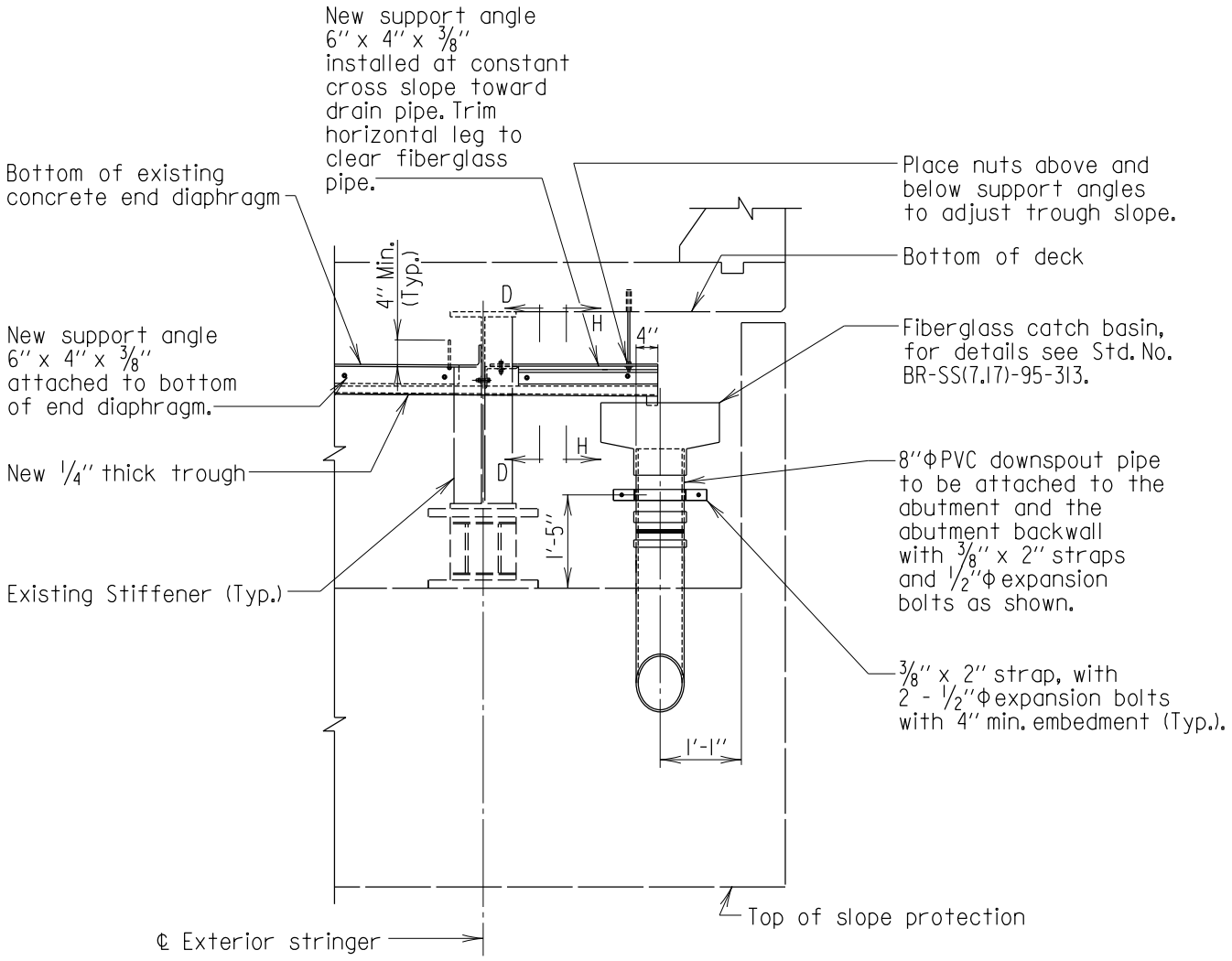

DOWNSPOUT DETAIL AT END OF ABUTMENT

Scale: 3/8" = 1'-0"

APPROVAL		
R.S. Freedman DIRECTOR OFFICE OF STRUCTURES DATE: 11/14/95		
REVISIONS		
	SHA	FHWA
	1-23-97	·
	1-22-01	·
FHWA APPROVAL	7-14-08	·
DATE: .	·	·

STATE OF MARYLAND
DEPARTMENT OF TRANSPORTATION
STATE HIGHWAY ADMINISTRATION
OFFICE OF STRUCTURES

DRAINAGE TROUGH DETAIL AT ABUTMENT FOR EXISTING STRUCTURE

STANDARD NO. BR-SR(0.06)-95-309 SHEET 7 OF 7

STRUCTURAL REPAIRS

GENERAL NOTES

1. It is preferable to place a single layer of grout bags instead of stacking. Place filter fabric under all grout bags including a single layer of bags.
2. If bags are stacked, overlap the joints of the preceding layer.
3. If possible, bags should be placed so that the top of the bag is at or below the stream bottom. (When filling a scour hole, keep the top of the bag at or below the stream bottom).
4. If the stream bed consists of soils that allow for settlement of the grout bags, do not tie the bags together. If the stream bed consists of a hard stiff soil/clay or an erodable rock, which the grout bags will never be able to settle, tie the grout bags together so they do not get washed away.
5. Grout bags should be no larger than 3' wide, 4' long and 1' thick.
6. The bag placed directly in front of the nose of the pier should be the width of the exposed portion of the pier. Similarly, make sure no gaps form between the bags and the front face of the footing.
7. Do not overfill the bags or allow grout to be poured between the seams of two bags.

FOR OFFICE USE ONLY

APPROVAL		
R.S. Freedman DIRECTOR OFFICE OF STRUCTURES DATE: 11/6/96		
REVISIONS		
SHA	FHWA	
8-5-08	·	
·	·	
·	·	
·	·	

FHWA APPROVAL
DATE: .

STATE OF MARYLAND
DEPARTMENT OF TRANSPORTATION
STATE HIGHWAY ADMINISTRATION
OFFICE OF STRUCTURES

GROUT BAG INSTALLATION
GENERAL NOTES

STANDARD NO. BR-SR(0.07)-96-314 SHEET 1 OF 1

STRUCTURAL REPAIRS

GENERAL NOTES

1. Depending on the depth of the undermining, place one grout bag or stack several layers of grout bags along the face of the abutment or pier in front of the undermined area. If bags are stacked, bags in successive rows and tiers shall be staggered.

2. Once the vent/fill pipes have been installed and the bags are filled, pump the grout into the undermined area until grout appears in the top of adjacent vent pipes. Cut or remove the vent/fill pipes flush with the top of the bags after the pumping operation is complete.

3. Adequate venting of the water to be displaced in the undermined area is important. The water must be able to escape when it is displaced by the grout pumped into the cavity. A 4' maximum spacing of the vent/fill pipes is recommended.

4. It is important to keep the nozzle buried in the grout during the pumping. This is to reduce the amount of mixing of the grout and the water to be displaced.

5. Debonding jackets should be placed around piles to prevent the grout from adhering to the piles if the exposed height is 3'-0" or greater. This is to prevent the additional weight of the grout from reducing the piles capacity.

6. If possible, clean out unstable material along the bottom of the undermined area prior to filling with grout.

APPROVAL		
E.S. Freedman DIRECTOR OFFICE OF STRUCTURES DATE: 11/6/96		
REVISIONS		
SHA	FHWA	
10-26-10	·	
·	·	
·	·	
·	·	

FHWA APPROVAL
DATE: .

STATE OF MARYLAND
DEPARTMENT OF TRANSPORTATION
STATE HIGHWAY ADMINISTRATION
OFFICE OF STRUCTURES

GROUT BAG INSTALLATION FOR UNDERMINED AREAS AT PIERS AND ABUTMENTS
GENERAL NOTES

STANDARD NO. BR-SR(0.08)-96-315 SHEET 1 OF 1

STRUCTURAL REPAIRS

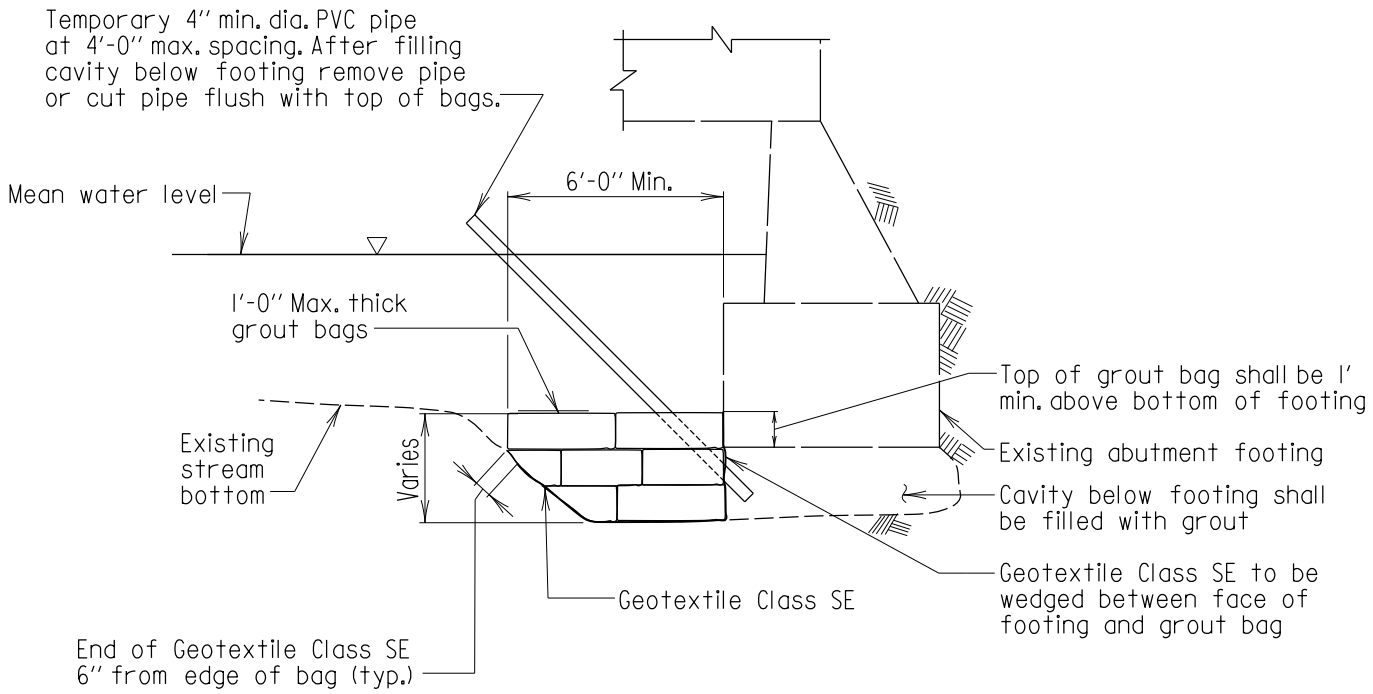

SECTION THRU ABUTMENT

Scale: 3/16'' = 1'-0''

Notes:

1. Stack bags as required. Joints between bags in successive rows and tiers shall be staggered.
2. Refer to General Plan for any excavation requirements.
3. Place top bag flush with face of footing.
4. If on piles, place debonding material around piles with greater than 3'-0'' exposure.
5. All bags shall be 1 ft. max. thick, 3 ft. max. wide, and 4 ft. max. length.
6. Remove debris before installation of bags.

APPROVAL	
E.S. Freedman DIRECTOR OFFICE OF STRUCTURES DATE: 11/6/96	
REVISIONS	
SHA	FHWA
8-5-08	·
·	·
·	·
·	·

FHWA APPROVAL

DATE: .

STATE OF MARYLAND
DEPARTMENT OF TRANSPORTATION
STATE HIGHWAY ADMINISTRATION
OFFICE OF STRUCTURES

GROUT BAG SECTION
CASE WHERE SCOUR AND UNDERMINING HAS OCCURRED AT ABUTMENT

STANDARD NO. BR-SR(0.09)-96-316 SHEET 1 OF 7

STRUCTURAL REPAIRS

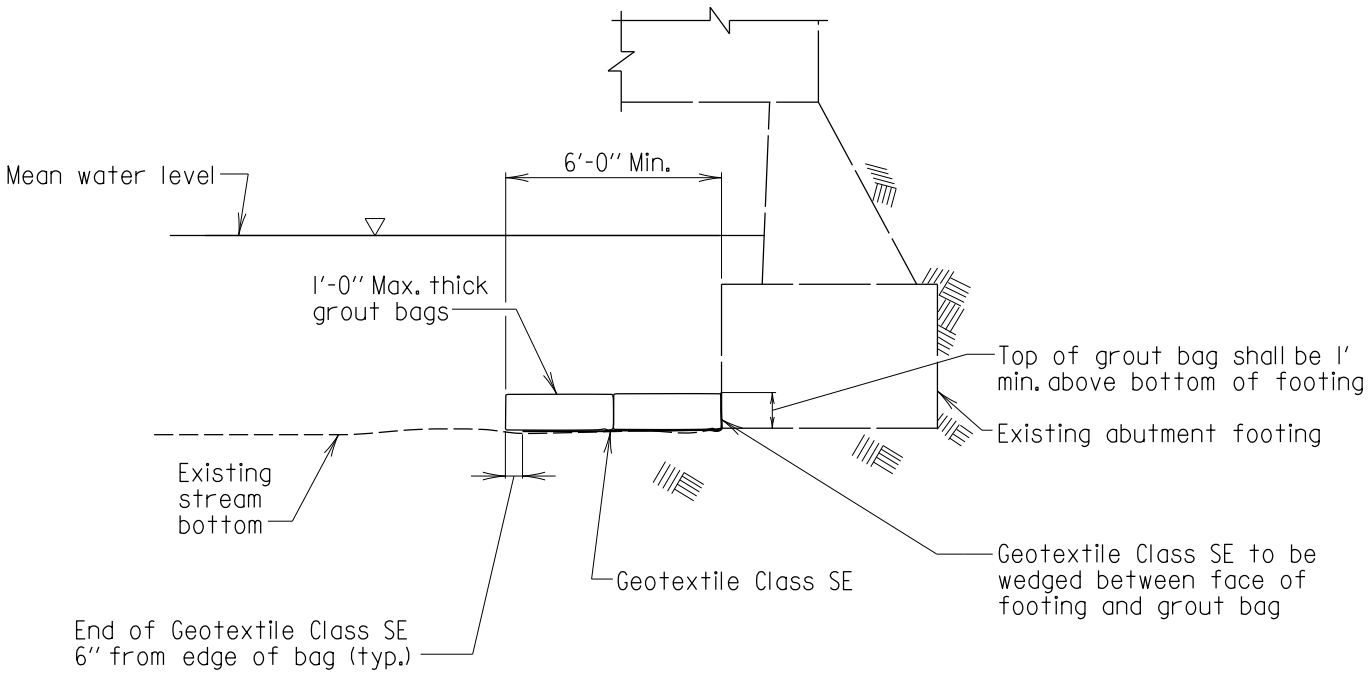

SECTION THRU ABUTMENT

Scale: 3/16" = 1'-0"

Notes:
1. Refer to General Plan for any excavation requirements.
2. Place bags flush with face of footing.
3. All bags shall be 1 ft. max. thick, 3 ft. max. wide, and 4 ft. max. length.

APPROVAL
R.S. Freedman DIRECTOR OFFICE OF STRUCTURES
DATE: 11/6/96

REVISIONS	
SHA	FHWA
8-5-08	.
.	.
.	.
.	.

FHWA APPROVAL	
DATE: .	

STATE OF MARYLAND
DEPARTMENT OF TRANSPORTATION
STATE HIGHWAY ADMINISTRATION
OFFICE OF STRUCTURES

GROUT BAG SECTION
CASE WHERE SCOUR POTENTIAL EXISTS
AT ABUTMENT

STANDARD NO. BR-SR(0.09)-96-316 SHEET 2 OF 7

STRUCTURAL REPAIRS

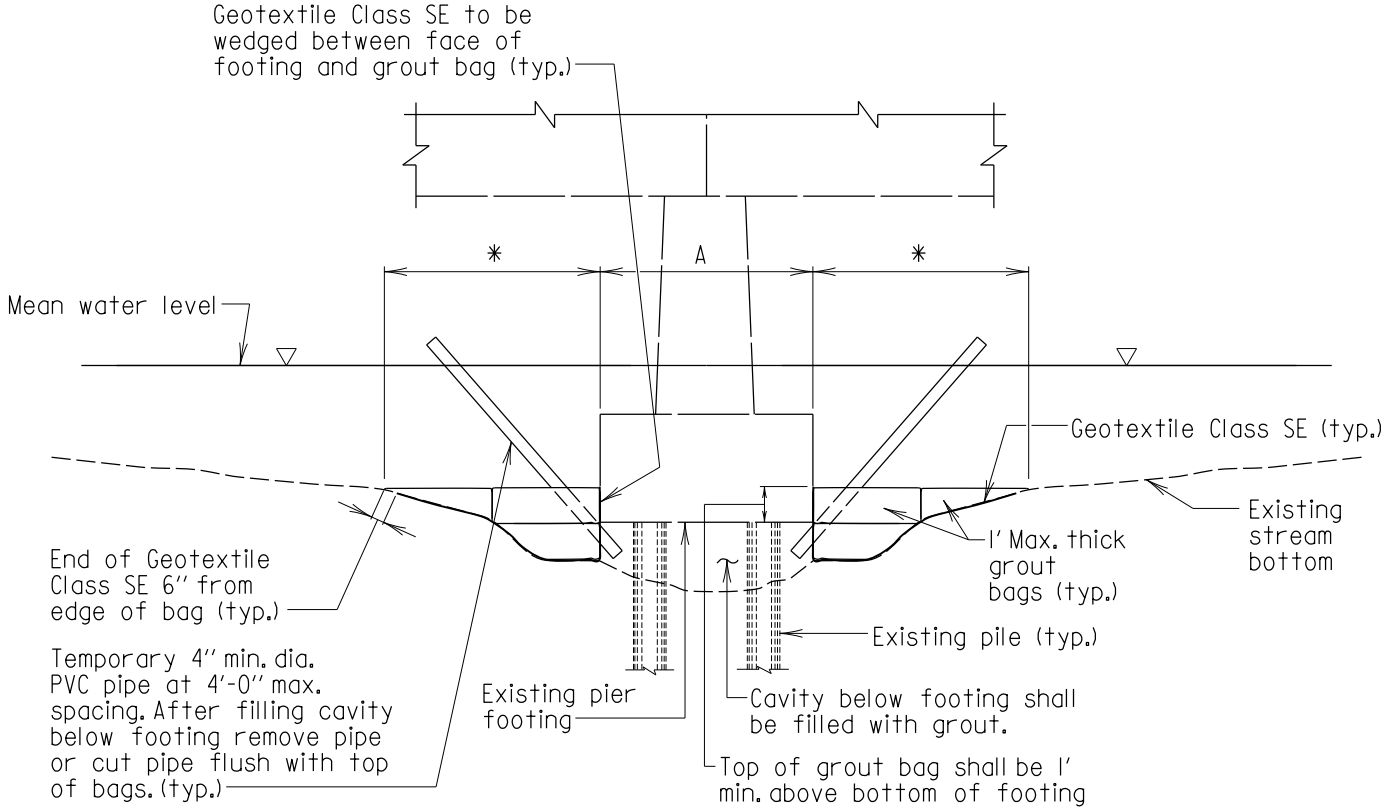

SECTION THRU PIER - ON PILES

Scale: 3/16" = 1'-0"

* 2A or 6'-0", whichever is greater, with a maximum of 12'-0".

Notes:

1. Stack bags as required. Joints between bags in successive rows and tiers shall be staggered.
2. Refer to General Plan for any excavation requirements.
3. Place top bag flush with face of footing.
4. If on piles, place debonding material around piles with greater than 3'-0" exposure.
5. All bags shall be 1 ft. max. thick, 3 ft. max. wide, and 4 ft. max. length.
6. Remove debris before installation of bags.

APPROVAL
R.S. Friedman DIRECTOR OFFICE OF STRUCTURES
DATE: 11/6/96

REVISIONS	
SHA	FHWA
8-5-08	·
·	·
·	·
·	·

FHWA APPROVAL
DATE: .

STATE OF MARYLAND
DEPARTMENT OF TRANSPORTATION
STATE HIGHWAY ADMINISTRATION
OFFICE OF STRUCTURES

GROUT BAG SECTION
CASE WHERE SCOUR AND UNDERMINING HAS OCCURED

STANDARD NO. BR-SR(0.09)-96-316 SHEET 3 OF 7

STRUCTURAL REPAIRS

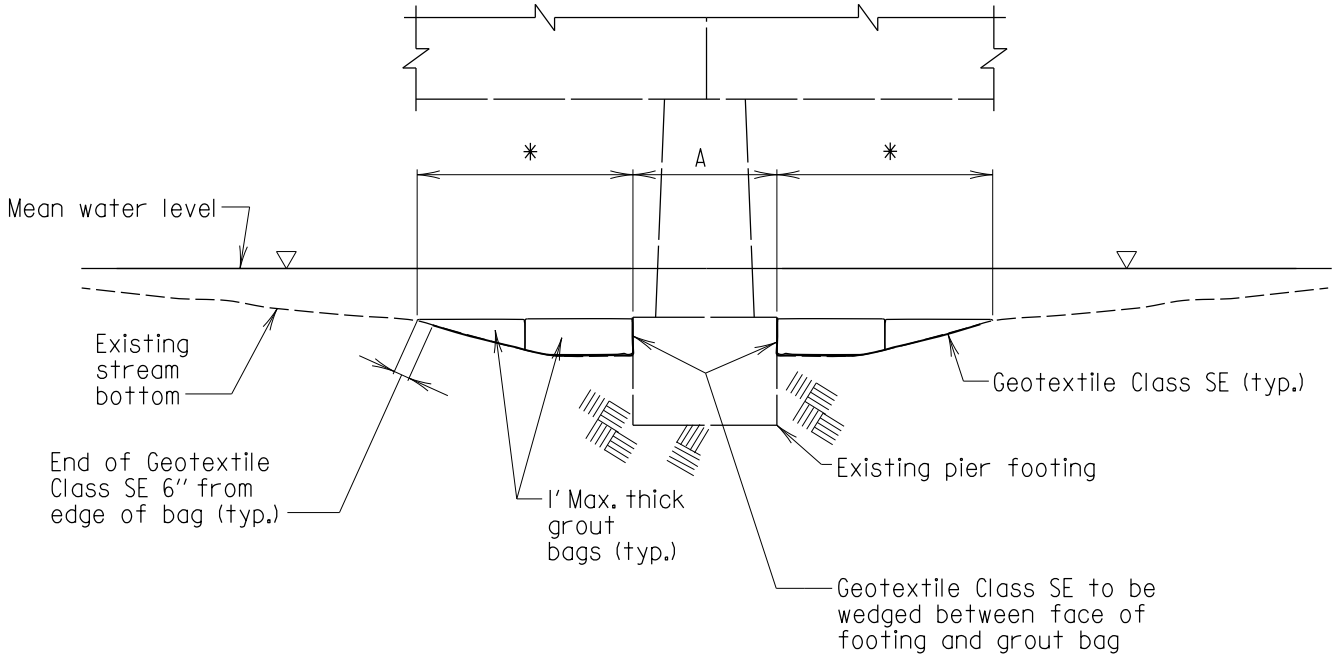

SECTION THRU PIER

Scale: 3/16" = 1'-0"

*2A or 6'-0", whichever is greater, with a maximum of 12'-0".

Notes:

1. Refer to General Plan for any excavation requirements.
2. Place bags flush with face of footing.
3. All bags shall be 1 ft. max. thick, 3 ft. max. wide, and 4 ft. max. length.
4. Top of grout bags shall be 1 ft. min. above bottom of footing.
5. Refer to sheet 5 of 7 for plan view of grout bag installation at pier.

APPROVAL
R.S. Freedman DIRECTOR OFFICE OF STRUCTURES
DATE: 11/6/96

REVISIONS	
SHA	FHWA
8-5-08	·
·	·
·	·
·	·

FHWA APPROVAL
DATE: .

STATE OF MARYLAND
DEPARTMENT OF TRANSPORTATION
STATE HIGHWAY ADMINISTRATION
OFFICE OF STRUCTURES

GROUT BAG SECTION
CASE WHERE SCOUR POTENTIAL EXISTS
AT PIER

STANDARD NO. BR-SR(0.09)-96-316 SHEET 4 OF 7

STRUCTURAL REPAIRS

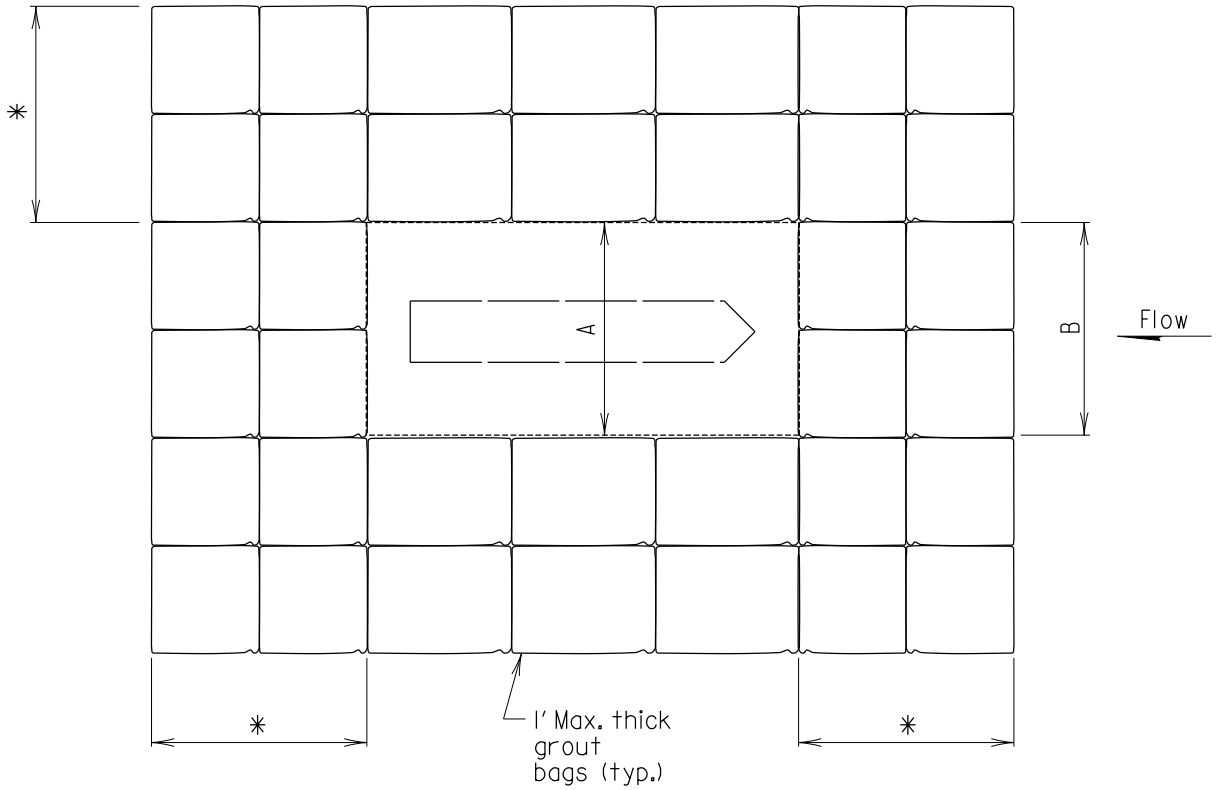

PLAN OF PIER

Scale: 3/16" = 1'-0"

A= Width of pier footing.

B= Length of grout bags in front and behind pier to match pier footing width.

* 2A or 6'-0", whichever is greater, with a maximum of 12'-0".

APPROVAL	
R.S. Freedman DIRECTOR OFFICE OF STRUCTURES DATE: 11/6/96	
REVISIONS	
SHA	FHWA
.	.
.	.
.	.
.	.

FHWA APPROVAL

DATE: .

STATE OF MARYLAND
DEPARTMENT OF TRANSPORTATION
STATE HIGHWAY ADMINISTRATION
OFFICE OF STRUCTURES

PLAN VIEW OF GROUT BAG INSTALLATION AT PIER

STANDARD NO. BR-SR(0.09)-96-316

SHEET 5 OF 7

STRUCTURAL REPAIRS

Note:
Grout bag entire stream channel for clear spans measuring perpendicular between footings of 16 ft. and less.

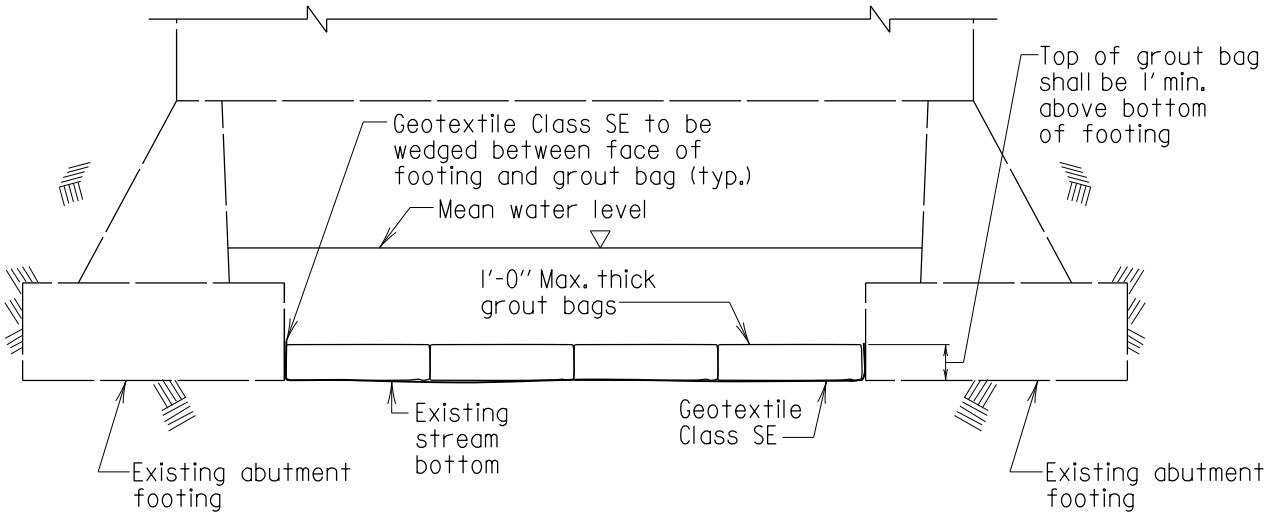

SECTION THRU ABUTMENTS AND CHANNEL

Scale: 3/16" = 1'-0"

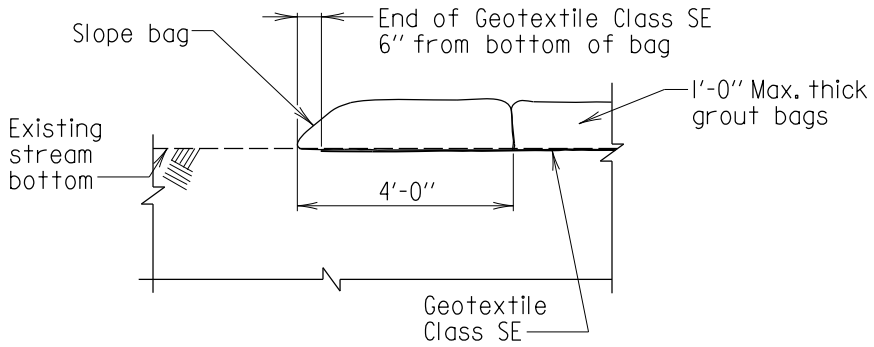

Note:
For location of Section A-A see sheet 7 of 7.

SECTION A-A

Scale: 1/4" = 1'-0"

Notes:
1. Lay bags on top of existing stream bottom.
2. Bags shall be buried at the inlet and outlet end of the structure.
3. Refer to General Plan for any excavation requirements.
4. Place bag flush with face of footing.

FOR OFFICE USE ONLY

APPROVAL	
E.S. Freedman DIRECTOR OFFICE OF STRUCTURES DATE: 11/6/96	
REVISIONS	
SHA	FHWA
8-5-08	·
·	·
·	·
·	·

FHWA APPROVAL
DATE: .

STATE OF MARYLAND
DEPARTMENT OF TRANSPORTATION
STATE HIGHWAY ADMINISTRATION
OFFICE OF STRUCTURES

SECTION VIEW OF GROUT BAGS
CASE WHERE SCOUR POTENTIAL EXISTS
FOR FULL CHANNEL WIDTH

STANDARD NO. BR-SR(0.09)-96-316 SHEET 6 OF 7

STRUCTURAL REPAIRS

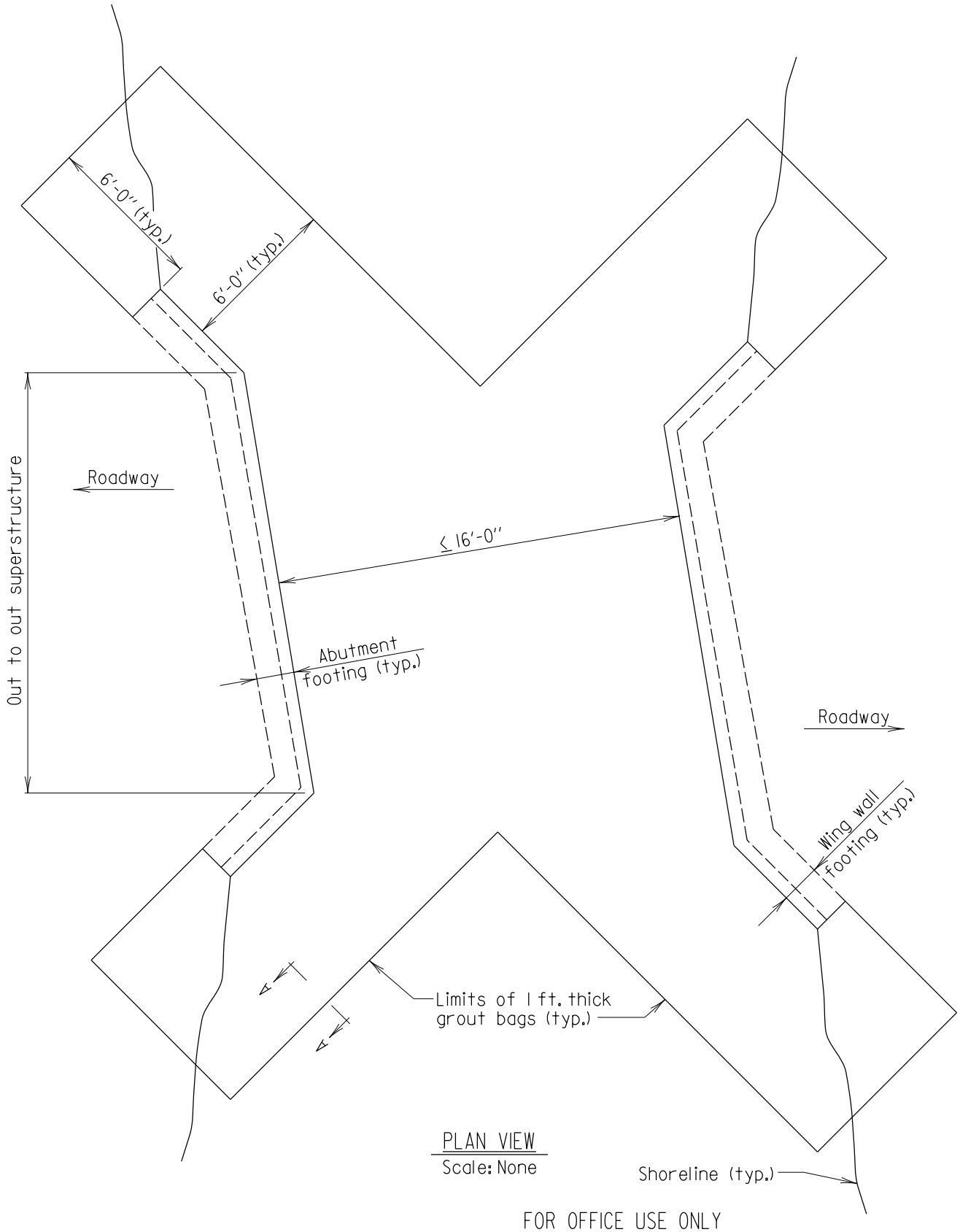

PLAN VIEW
Scale: None

FOR OFFICE USE ONLY

APPROVAL	
R.S. Friedman DIRECTOR OFFICE OF STRUCTURES DATE: 11/6/96	
REVISIONS	
SHA	FHWA
.	.
.	.
.	.
.	.

FHWA APPROVAL
DATE: .

STATE OF MARYLAND
DEPARTMENT OF TRANSPORTATION
STATE HIGHWAY ADMINISTRATION
OFFICE OF STRUCTURES

PLAN VIEW OF GROUT BAGS
CASE WHERE SCOUR POTENTIAL EXISTS
FOR FULL CHANNEL WIDTH

STANDARD NO. BR-SR(0.09)-96-316 SHEET 7 OF 7

STRUCTURAL REPAIRS

GENERAL NOTES

Wire Rope: Wire rope shall meet the requirements of Federal Specification RR-W-410D, Latest Edition, Type 304 Stainless Steel 7 x 19 IWRC aircraft cable, Extra improved plow steel. The cable shall be 1/4" diameter having a minimum breaking load of 6400 lbs and a working and a working load limit of 1400 lbs.

Clips: Wire rope clips shall be stainless steel and meet Federal Specifications FF-C-450D, Type I, Class I. A minimum of 3 clips shall be installed at each loop fitting. Nuts for clips shall be tightened to a torque of 15 ft-lbs.

Thimbles: Wire rope thimbles shall be 1/4" heavy stainless steel and meet Federal Specification FF-T-276b, Type III.

Turnbuckle: Turnbuckles shall be 1/2" diameter with a 6" take up and jaw end fittings at both ends that meet Federal Specification FF-T-791B, Type I, Form I, Class 7. Turnbuckles shall be forged stainless steel, quenched and tempered. Turnbuckles shall have a minimum breaking load of 11,000 lbs and a working load limit of 2,200 lbs.

Steel Pipe: Stainless steel pipes shall be nominal 3/4" diameter standard weight pipe meeting A 53, Grade B furnished to the dimensions shown on the Plans. The outside edges of the pipe shall be deburred to prevent damage to the wire rope.

Epoxy Adhesive: Refer to SHA Specification 921.04.

APPROVAL		
E.S. Freedman DIRECTOR OFFICE OF STRUCTURES DATE: 2/9/07		
REVISIONS		
SHA	FHWA	
.	.	
.	.	
.	.	
.	.	

FHWA APPROVAL
DATE: .

STATE OF MARYLAND
DEPARTMENT OF TRANSPORTATION
STATE HIGHWAY ADMINISTRATION
OFFICE OF STRUCTURES

NOISE WALL PANEL RESTRAINT DETAIL
GENERAL NOTES

STANDARD NO. BR-SR(0.10)-07-378 SHEET 1 OF 2

STRUCTURAL REPAIRS

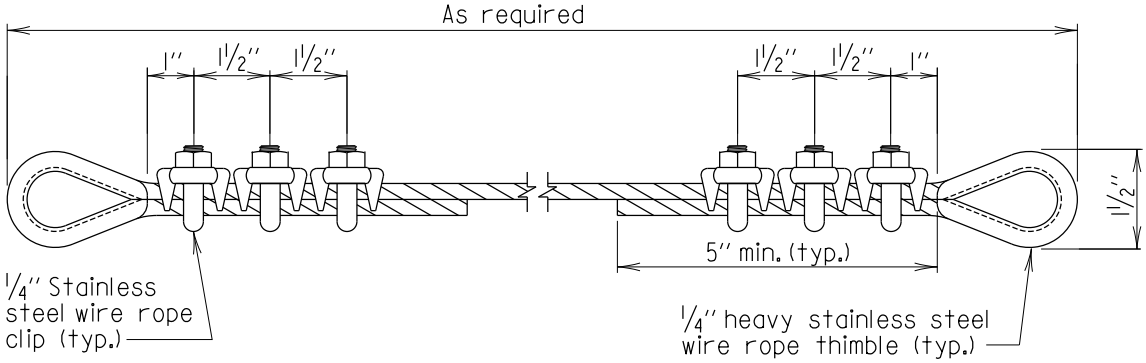

DETAIL OF 1/4" STAINLESS STEEL WIRE ROPE

Scale: None

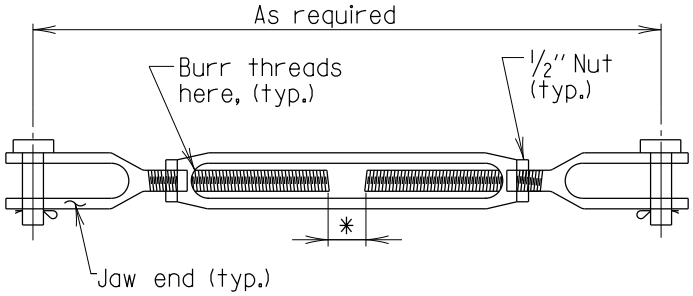

* Allow a 1/2" minimum gap after wire rope is taken up to snug tightness.

DETAIL OF 1/2" DIAMETER STAINLESS STEEL TURNBUCKLE

Scale: None

APPROVAL	
R.S. Freedman DIRECTOR OFFICE OF STRUCTURES DATE: 2/9/07	
REVISIONS	
SHA	FHWA
.	.
.	.
.	.
.	.

FHWA APPROVAL
DATE: .

STATE OF MARYLAND
DEPARTMENT OF TRANSPORTATION
STATE HIGHWAY ADMINISTRATION
OFFICE OF STRUCTURES

NOISE WALL PANEL RESTRAINT DETAIL
HARDWARE

STANDARD NO. BR-SR(0.10)-07-378 SHEET 2 OF 2

STRUCTURAL REPAIRS

CONSTRUCTION SEQUENCE

1. Core a 1¼" dia. hole through the existing panel at locations as shown on panel elevation view of appropriate standard sheet.
2. Coat the outside face of the stainless steel pipe and the inside of the 1¼" dia. hole with epoxy adhesive as specified in the General Notes. Allow epoxy to set before threading or tensioning the wire rope.
3. Loop wire rope through stainless steel pipe and fasten turnbuckle as shown on Section A-A of appropriate standard sheet. The turnbuckle shall be taken up to snug tightness and tightened down with the jam nut. Burr turnbuckle threads after tightening is complete.
4. Coat those areas of the neoprene wedges in contact with concrete with lubricant adhesive conforming to 911.04.03 before inserting.

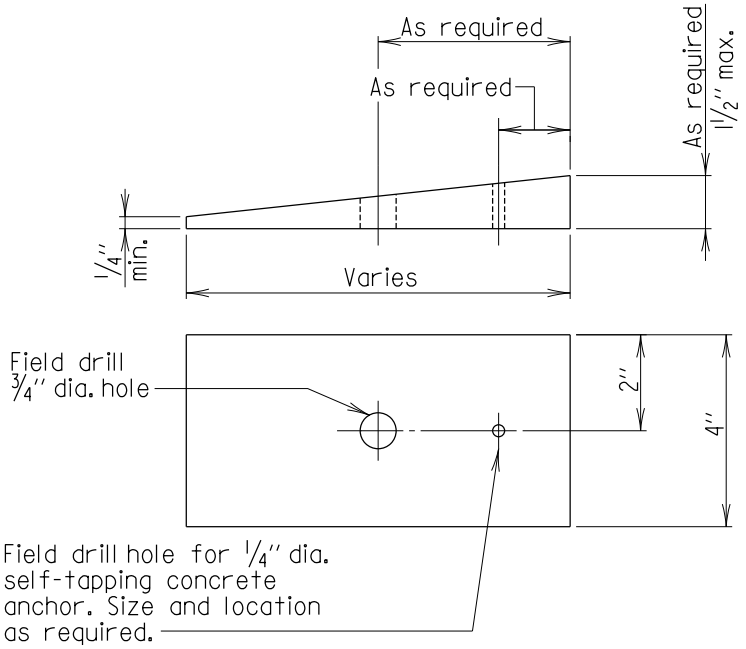

NEOPRENE WEDGE DETAIL

Scale: ¼" = 1"

Note:
For neoprene specifications refer to M220-67. Color to match existing noise wall.

APPROVAL	
R.S. Freedman DIRECTOR OFFICE OF STRUCTURES DATE: 2/9/07	
REVISIONS	
SHA	FHWA
.	.
.	.
.	.
.	.

FHWA APPROVAL
DATE: .

STATE OF MARYLAND
DEPARTMENT OF TRANSPORTATION
STATE HIGHWAY ADMINISTRATION
OFFICE OF STRUCTURES

NOISE WALL PANEL RESTRAINT DETAIL
WEDGE

STANDARD NO. BR-SR(0.11)-07-379 SHEET 1 OF 1

STRUCTURAL REPAIRS

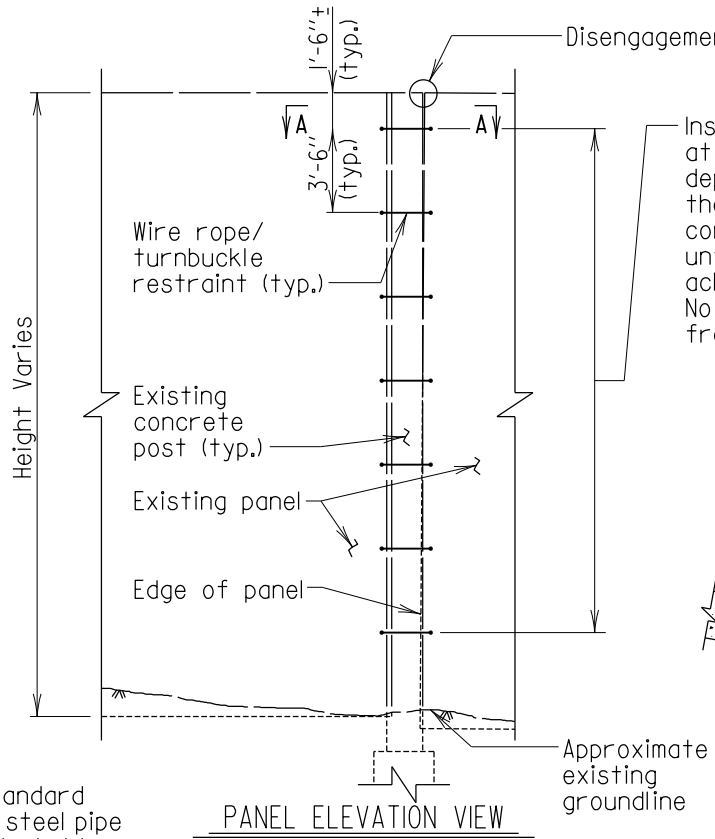

PANEL ELEVATION VIEW

Scale: 1/8" = 1'-0"

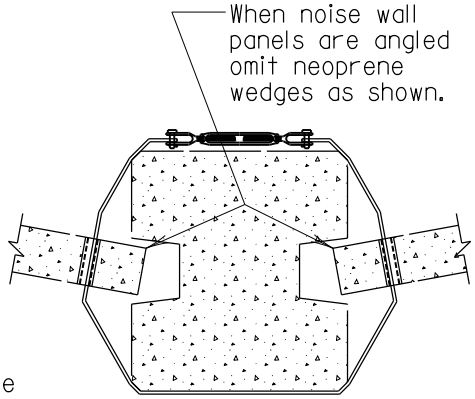

ALTERNATE SECTION A-A

Scale: 3/4" = 1'-0"

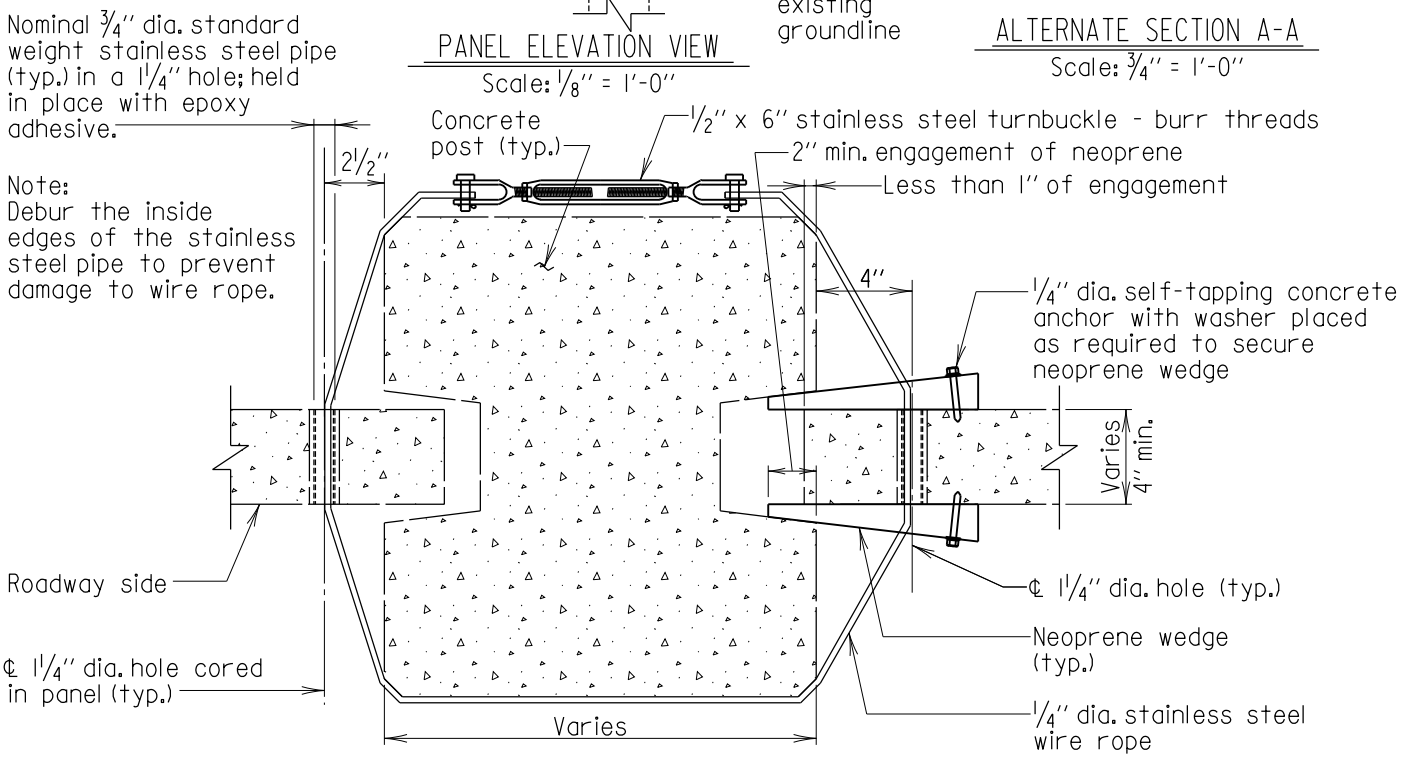

SECTION A-A

Scale: 1 1/2" = 1'-0"

Note:
On multi-sectional panels install a minimum of two panel restraints per section. Restraints shall be spaced a minimum of 1'-6" from the horizontal panel joint.

Noise Wall ID No:
Post No(s):
Direction for Counting Posts:

APPROVAL	
R.S. Freedman DIRECTOR OFFICE OF STRUCTURES	
DATE: 2/9/07	
REVISIONS	
SHA	FHWA
.	.
.	.
.	.
.	.

FHWA APPROVAL
DATE: .

STATE OF MARYLAND
DEPARTMENT OF TRANSPORTATION
STATE HIGHWAY ADMINISTRATION
OFFICE OF STRUCTURES

NOISE WALL PANEL RESTRAINT DETAILS
STAND ALONE CONCRETE POSTS

STANDARD NO. BR-SR(0.12)-07-380 SHEET 1 OF 1

STRUCTURAL REPAIRS

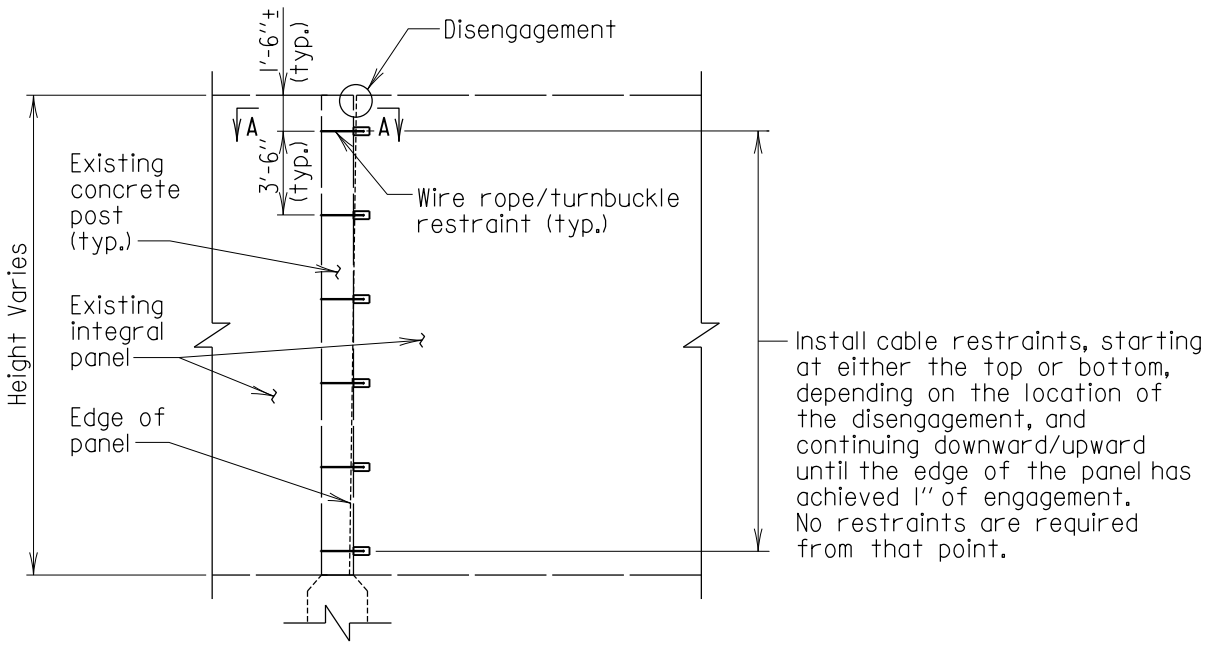

Note:
Debur the inside edges of the stainless steel pipe to prevent damage to wire rope.

PANEL ELEVATION VIEW
Scale: 1/8" = 1'-0"

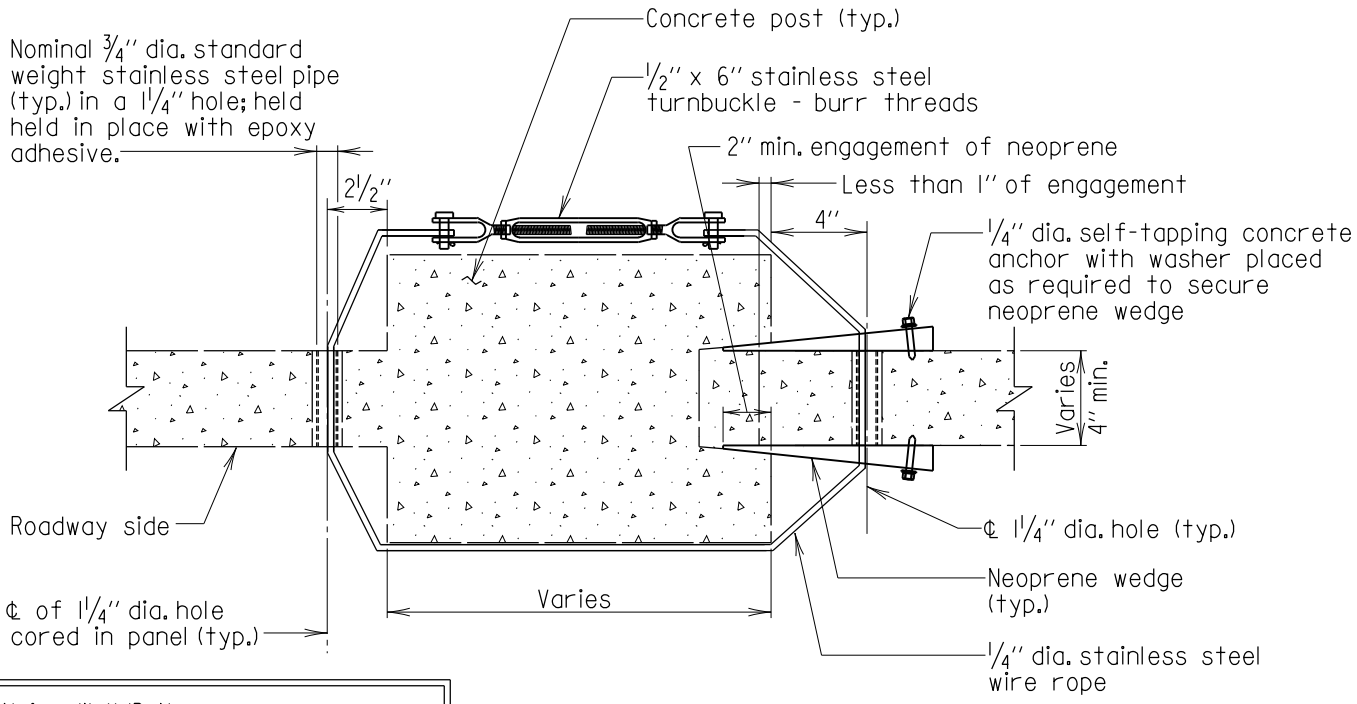

SECTION A-A
Scale: 1 1/2" = 1'-0"

Note:
On multi-sectional panels install a minimum of two panel restraints per section. Restraints shall be spaced a minimum of 1'-6" from the horizontal panel joint.

Noise Wall ID No:
Post No(s):
Direction for Counting Posts:

APPROVAL	
R.S. Freedman DIRECTOR OFFICE OF STRUCTURES	
DATE: 2/9/07	
REVISIONS	
SHA	FHWA
.	.
.	.
.	.
.	.

FHWA APPROVAL
DATE: .

STATE OF MARYLAND
DEPARTMENT OF TRANSPORTATION
STATE HIGHWAY ADMINISTRATION
OFFICE OF STRUCTURES

NOISE WALL PANEL RESTRAINT DETAILS
CONCRETE NOISE WALL WITH INTERGRAL POSTS

STANDARD NO. BR-SR(0.13)-07-381 SHEET 1 OF 1

STRUCTURAL REPAIRS

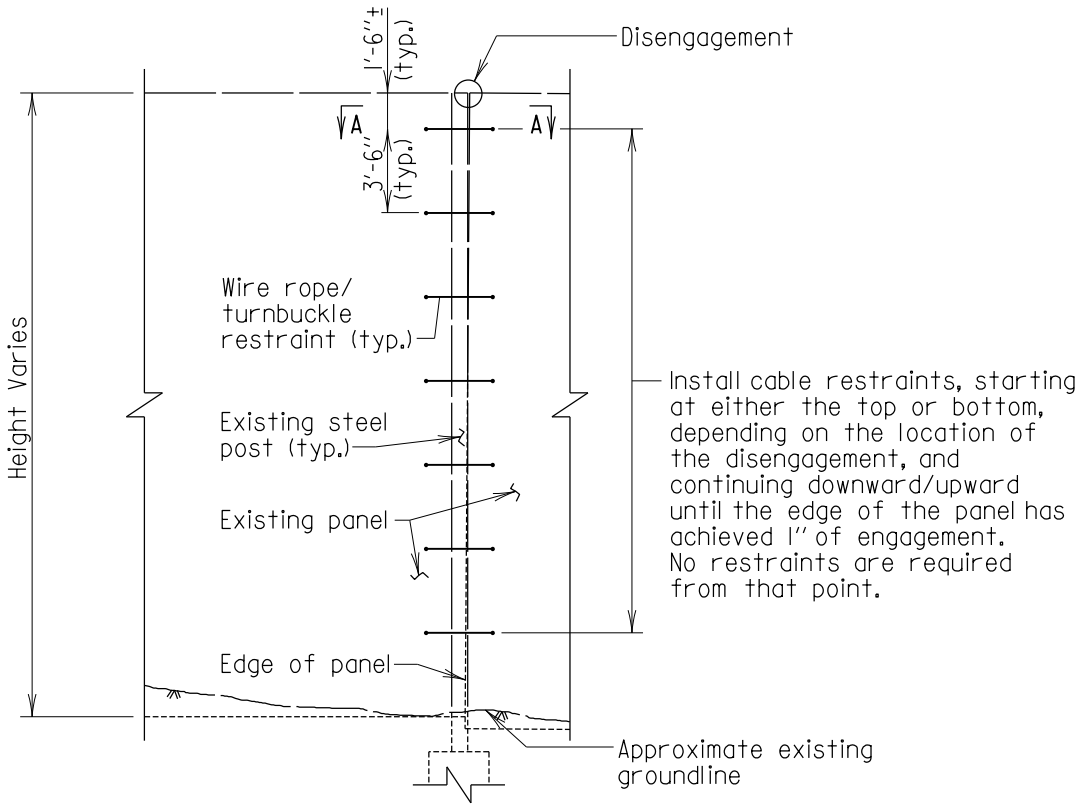

PANEL ELEVATION VIEW

Scale: 1/8" = 1'-0"

Note:
Debur the inside edges of the stainless steel pipe to prevent damage to wire rope.

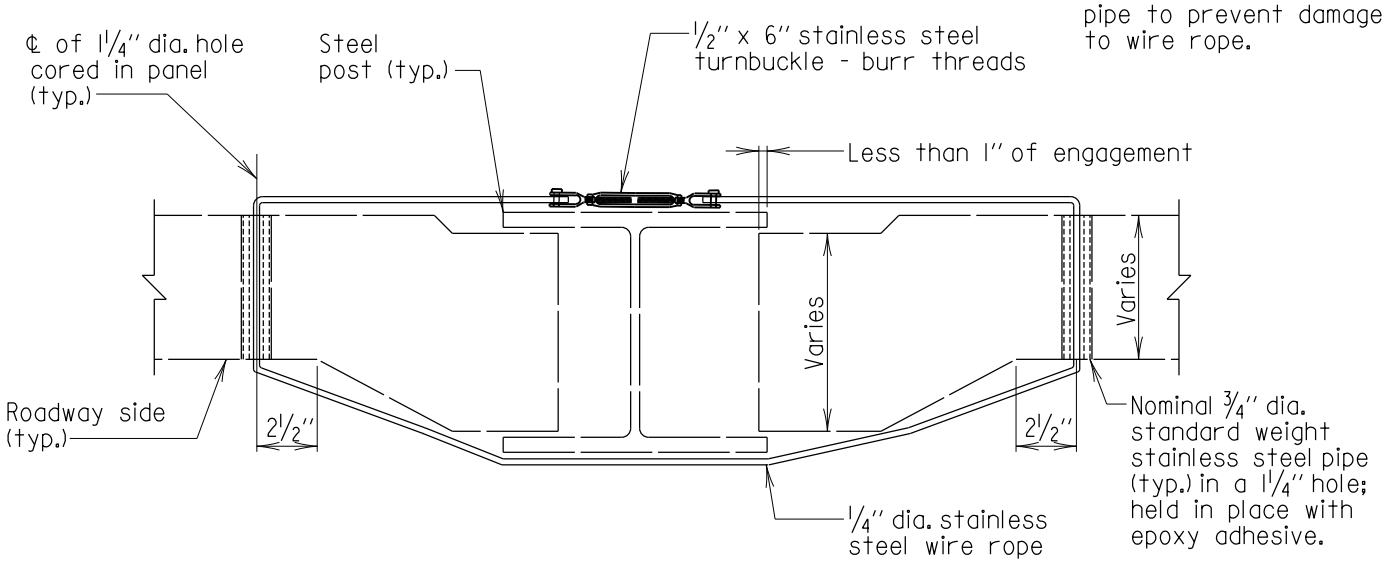

SECTION A-A

Scale: 1 1/2" = 1'-0"

Note:
On multi-sectional panels install a minimum of two panel restraints per section. Restraints shall be spaced a minimum of 1'-6" from the horizontal panel joint.

Noise Wall ID No:
Post No(s):
Direction for Counting Posts:

APPROVAL
R.S. Freedman DIRECTOR OFFICE OF STRUCTURES
DATE: 2/9/07

REVISIONS	
SHA	FHWA
.	.
.	.
.	.
.	.

FHWA APPROVAL
DATE: .

STATE OF MARYLAND
DEPARTMENT OF TRANSPORTATION
STATE HIGHWAY ADMINISTRATION
OFFICE OF STRUCTURES

NOISE WALL PANEL RESTRAINT DETAILS
STEEL POSTS

STANDARD NO. BR-SR(0.14)-07-382 SHEET 1 OF 1

STRUCTURAL REPAIRS

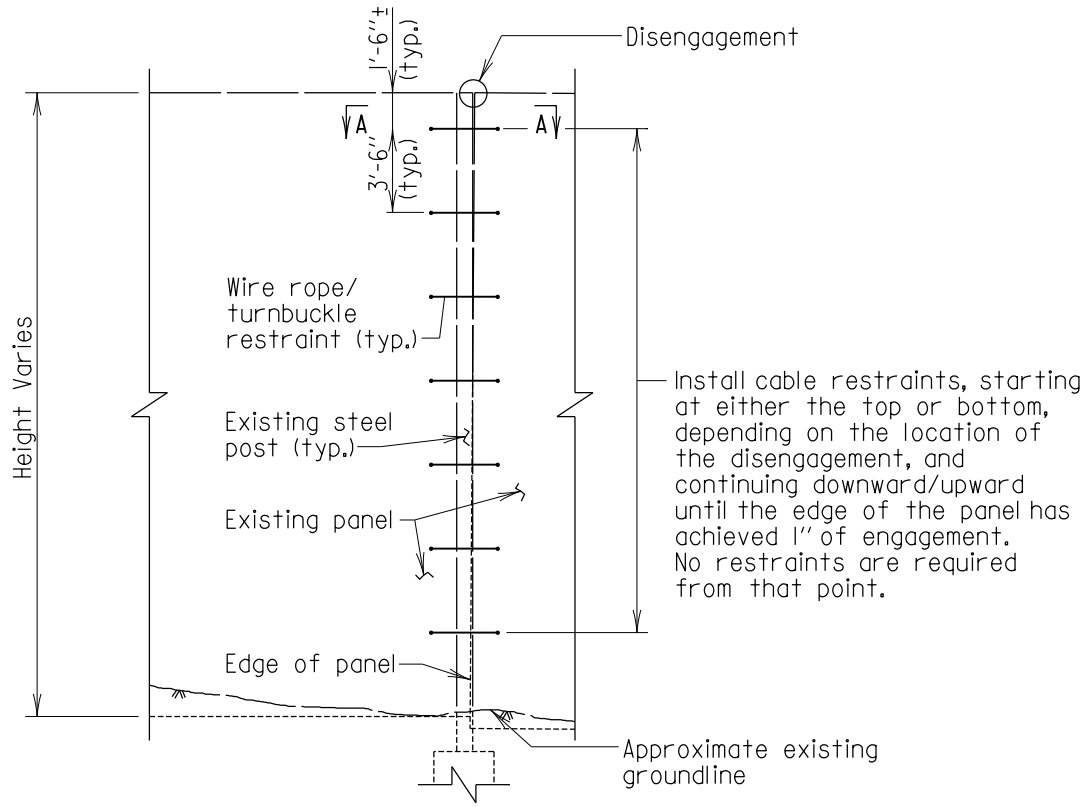

PANEL ELEVATION VIEW

Scale: 1/8" = 1'-0"

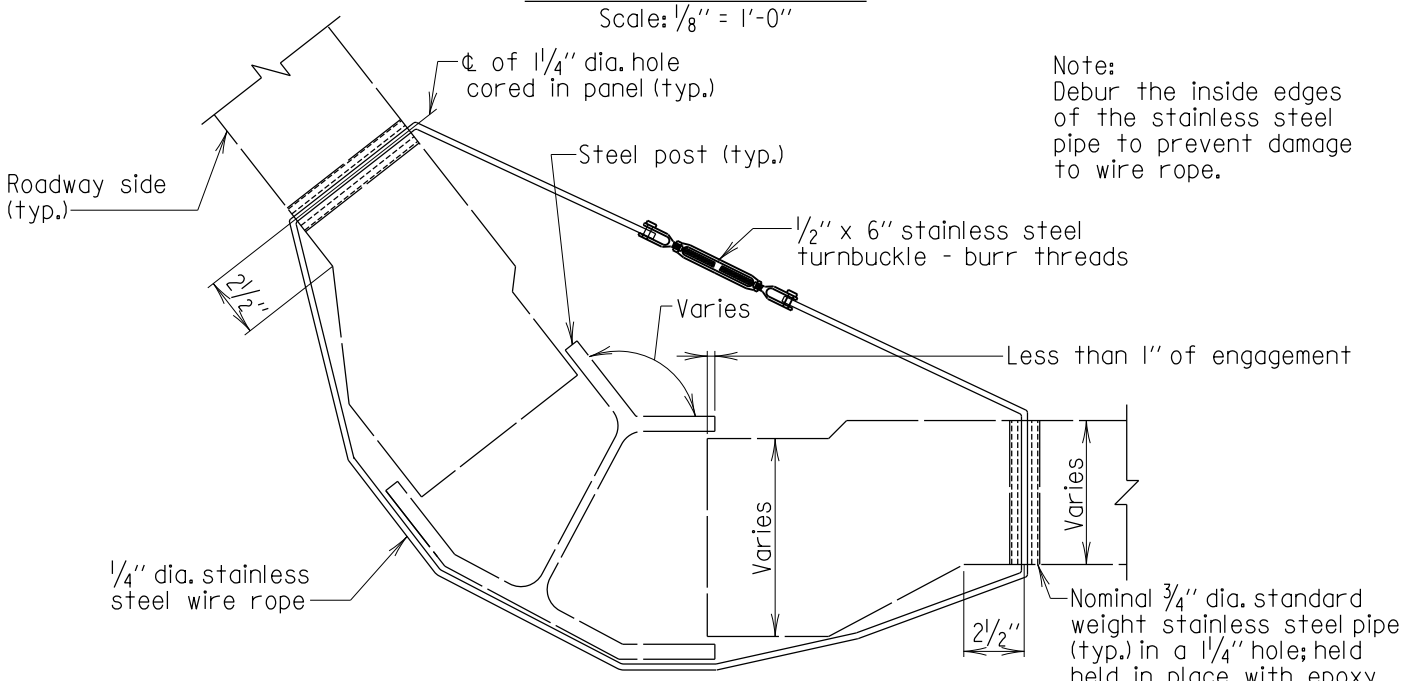

Note:
Debur the inside edges of the stainless steel pipe to prevent damage to wire rope.

SECTION A-A

Scale: 1 1/2" = 1'-0"

Note:
On multi-sectional panels install a minimum of two panel restraints per section. Restraints shall be spaced a minimum of 1'-6" from the horizontal panel joint.

Noise Wall ID No:
Post No(s):
Direction for Counting Posts:

APPROVAL
R.S. Freedman DIRECTOR OFFICE OF STRUCTURES
DATE: 2/9/07

REVISIONS	
SHA	FHWA
.	.
.	.
.	.
.	.

FHWA APPROVAL
DATE: .

STATE OF MARYLAND
DEPARTMENT OF TRANSPORTATION
STATE HIGHWAY ADMINISTRATION
OFFICE OF STRUCTURES

NOISE WALL PANEL RESTRAINT DETAILS
SKEWED PANEL CONNECTION - SPECIAL STEEL POSTS

STANDARD NO. BR-SR(0.15)-07-383 SHEET 1 OF 1

STRUCTURAL REPAIRS