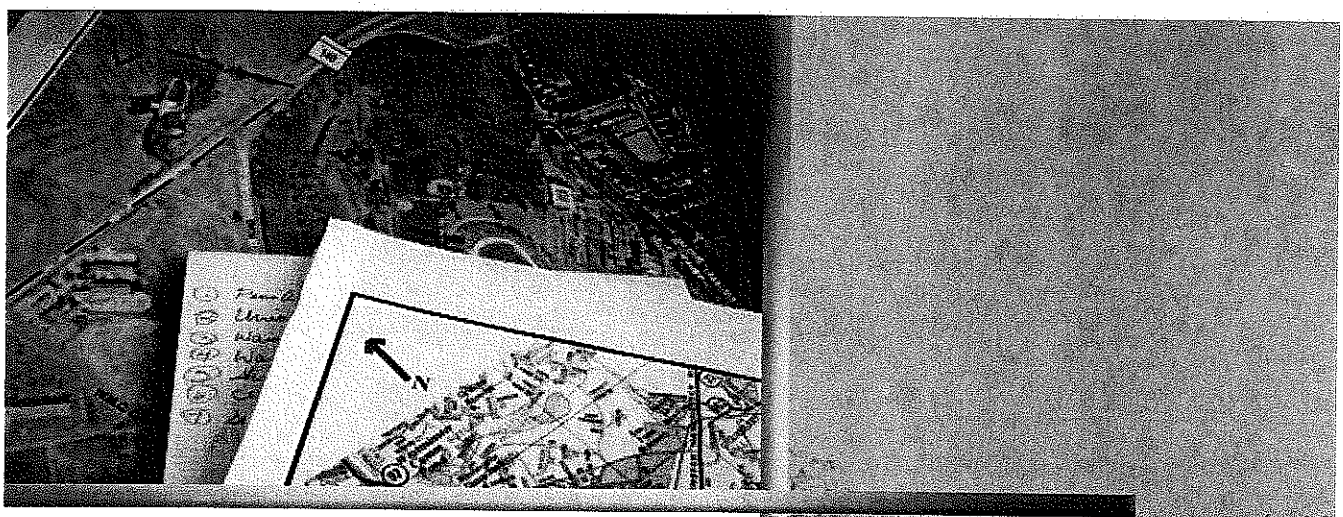

December 2007

FINDING OF NO SIGNIFICANT IMPACT

MD 140 Transportation Improvement Study

from Market Street to Sullivan Road

Project No. CL702A11

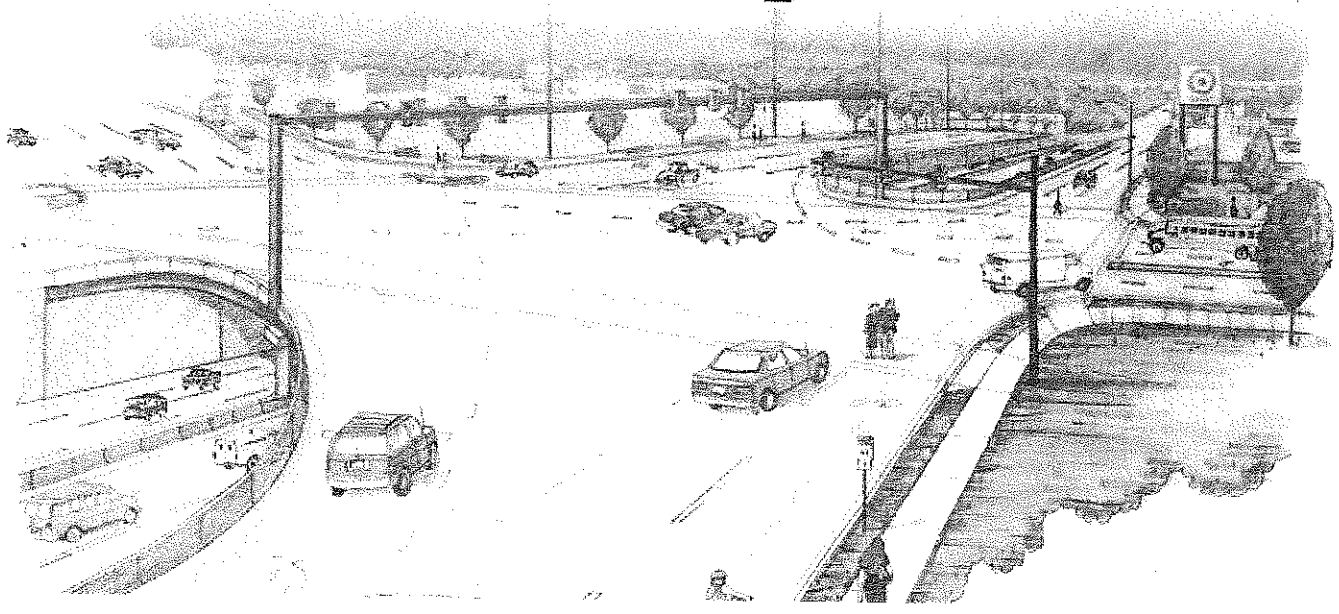

FEDERAL HIGHWAY ADMINISTRATION
DELMAR DIVISION

FINDING OF NO SIGNIFICANT IMPACT

MD 140 TRANSPORTATION IMPROVEMENT STUDY

FROM MARKET STREET TO SULLIVAN ROAD
CARROLL COUNTY, MARYLAND

US DEPARTMENT OF TRANSPORTATION
FEDERAL HIGHWAY ADMINISTRATION
and
STATE OF MARYLAND
DEPARTMENT OF TRANSPORTATION
STATE HIGHWAY ADMINISTRATION

The Federal Highway Administration (FHWA) has determined that the State Highway Administration (SHA) Preferred Alternate – Combination Option 4 with Gorsuch Road Option B, will have no significant impacts on the environment. The SHA Preferred Alternate proposed three main intersection improvements within the study area. A Single Point Urban Interchange (SPUI) is proposed at Malcolm Drive, and Continuous Flow Intersections (CFI) are proposed at both Englar Road and Center Street. Transportation Systems Management (TSM) improvements are proposed at the Sullivan Road, Cranberry Road/Ralph Street, and Market Street intersections. Other improvements throughout the corridor include 5-foot sidewalks, enhanced pedestrian crossings and a 16-foot outside travel lane/auxiliary lane to provide safer accommodations for bicyclists.

As part of the interchange improvements at Malcolm Drive, the existing signalized intersection at Gorsuch Road will be converted to a right-in/right-out only access to MD 140 and the signal will be eliminated. Gorsuch Road Option B provides a right turn onto Gorsuch Road from northbound MD 140, prior to the Hess Service Station. Access from the south side of Gorsuch Road will be near the existing intersection onto the service road for the interchange. A pedestrian bridge will be constructed from the Boston Inn property on the south side of MD 140 to Gorsuch Road on the north side of MD 140.

The SHA Preferred Alternate requires approximately 34 acres of right-of-way from 95 parcels and would result in eleven commercial property displacements. Encroachment on less than one acre of wetlands, 192 linear feet of stream, and less than one acre of wooded area would also be required.

This Finding of No Significant Impact (FONSI) has been independently evaluated by the FHWA and determined to adequately and accurately discuss the need, environmental issues, and impacts of the proposed project and appropriate mitigation measures. It provides sufficient evidence and analysis for determining that an Environmental Impact Statement is not required. The FHWA takes full responsibility for the accuracy, scope, and content of the FONSI and attached documentation and information contained herewith.

William A. Woodl
Federal Highway Administration
Division Administrator

12/18/2007
Date

for

Raja Veeramachaneni, Director
Office of Planning and
Preliminary Engineering

10/5/07
Date

Table of Contents

TABLE OF CONTENTS

Page

Section I: Record of Decision I-1

Section II: Comparison of Impacts II-1

Section III: SHA Preferred Alternative III-1
A. Project Background III-1
1. Project Location and Description III-1
2. Existing Conditions III-1
3. Purpose and Need III-4
4. Traffic Conditions III-4
5. Accident Statistics III-7
6. System Linkage/Road Function III-8
7. County Comprehensive Plan Compatibility III-8
8. Local Concerns III-8
B. Alternatives Retained for Detailed Study (ARDS) III-9
1. Alternatives Presented at the Public Hearing III-9
2. Combination Options Developed III-13
C. Description of SHA Preferred Alternative III-16
D. Environmental Consequences of SHA Preferred Alternative III-21
1. Socio-economic Environment III-21
2. Natural Resources III-30
3. Hazardous Waste III-32
4. Air and Noise III-33
5. Secondary and Cumulative Effects Analysis (SCEA) III-42
E. Mitigation III-42
1. Socio-economic Environment III-42
2. Natural Resources III-43
3. Hazardous Waste III-44

Section IV: Summary of Public Involvement IV-1
A. Area-wide Surveys, Focus Groups, and Public Workshops IV-1
B. Summary of Public Hearing IV-3
C. Continued Coordination IV-3

Appendices:

Appendix A – Public Hearing Correspondence and Comments
Appendix B – Traffic Data – Critical Lane Volumes, ADT, and LOS Data Sheets

LIST OF FIGURES

Figure Number	Title	Page
1	Study Area Map	III-2
2	Project Location Map	III-3
3 through 6	SHA Preferred Alternative	III-17-20
7	Census Tracts and Residential Areas	III-25
8	U.S. VMT vs. Air Toxic Emissions 2000-2020	III-39

LIST OF TABLES

Table Number	Title	Page
II-1	Summary of Impacts	II-1
III-1	Intersection Capacity Analysis	III-6
III-2	Accident Summary for MD 140 From Sullivan Road to Market Street	III-7
III-3	Preliminary Construction and Right-of-Way Cost Estimates	III-10
III-4	Level of Service	III-10
III-5	Parking Space Impacts per Property	III-23
III-6	Noise Analysis Summary	III-40

Section I
Record of Decision

Robert L. Ehrlich, Jr., *Governor*
Michael S. Steele, *Lt. Governor*

State Highway Administration

Robert L. Flanagan, *Secretary*
Neil J. Pedersen, *Administrator*

MARYLAND DEPARTMENT OF TRANSPORTATION

MEMORANDUM

TO: Mr. Raja Veeramachaneni, Director
Office of Planning and
Preliminary Engineering

FROM: Mr. Bruce M. Grey
Deputy Director
Office of Planning and
Preliminary Engineering

DATE: July 3, 2006

SUBJECT: Project No.: CL702A11
MD 140 Transportation Improvement Study
Selected Alternative Meeting with the Administrator

On Monday May 22, 2006, the project team met with the SHA Administrator Mr. Neil Pedersen, to present the recommended preferred alternative for this project. The following persons were in attendance:

Mr. Neil Pedersen	SHA-ADM	410-545-0400
Mr. Douglas Simmons	SHA-DA-CEPE	410-545-0411
Mr. Raja Veeramachaneni	SHA-OPPE	410-545-0412
Ms. Carmeletta Harris	SHA-PPD	410-545-8522
Ms. Barbra Allera-Bohlen	SHA-EPD	410-545-8633
Mr. Dennis M. Atkins	SHA-PPD	410-545-8506
Mr. Mark Crampton	SHA-Dist-7	301-624-8159
Mr. Erik Fisher	City of Westminster	410-848-7967
Ms. Patricia Greene	SHA-PPD	410-545-8528
Mr. Bruce Grey	SHA-PPD	410-545-8500
Mr. Joe Harrison	SHA-PPD	410-545-8506
Mr. Steve King	SHA-RIPD	410-545-5656
Mr. Joe Kresslein	SHA-PPD	410-545-8550
Mr. Keith Kucharek	SHA-RIPD	410-545-8792
Ms. Jennifer Lozinski	SHA-PPD	410-545-8509
Ms. L'Kiesha Markley	SHA-PPD	410-545-5641
Mr. George Miller	SHA-Dist-7	301-624-8140

Mr. Marion Milton	SHA-PPD	410-545-8557
Mr. Ray Moravec	URS	410-785-7220
Mr. Harvey Muller	SHA-RIPD	410-545-5656
Mr. Saed Rahwanji	SHA-OOTS-TDSD	410-787-5870

The meeting was opened by Ms. Carmeletta Harris who welcomed the attendees and asked everyone to introduce themselves. After introductions, Ms. Harris stated that the purpose of the meeting was to present to the Administrator, the project team's recommended preferred alternative for the MD 140 Transportation Improvement Study. Ms. Harris followed with a brief overview of the recent activities completed during the study since the October 2004 Public Hearing. She stated that three team recommendation meetings had occurred. Members of the project team have also met with the Carroll County Commissioners and the Mayor and Council of the City of Westminster to coordinate efforts during the development of the alternatives and to provide information on the benefits derived from using Continuous Flow Intersections (CFIs). SHA has received a joint letter in support of CFIs at Center Street and Englar Road and the Single Point Urban Interchange (SPUI) at Malcolm Drive from the Carroll County Commissioners and the Mayor and Council of the City of Westminster. She noted that a meeting was also held with the SHA Director of the Office of Planning and Preliminary Engineering (OPPE), Mr. Raja Veeramachaneni, who concurred with the team's preferred recommendation. Ms. Harris then introduced Mr. Ray Moravec who presented the alternatives and options considered.

Description of Alternatives

Mr. Moravec began with a brief overview of the activities leading to the Combination Options being presented at the meeting. He explained that initially there were five build alternatives considered for the study. Through collaborative efforts with Carroll County Officials and the Mayor and Council of the City of Westminster to provide improvements to MD 140, while protecting features important to preserving the character of the community, the following three combination options were dropped from further consideration. Combination Option 1 was to provide Transportation System Management (TSM) treatment for the length of the corridor. Combination Option 3 was to combine TSM treatment along the corridor with CFI treatments at Malcolm Drive and Market Street, and Combination Option 5 was to provide CFI treatments at Englar Road, Malcolm Drive and Market Street. The project team was asked to conduct further study of Combination Options 2 and 4 along with options for Gorsuch Road with the purpose of identifying a preferred alternative. The description of these combination options are as follows:

Combination Option 2 : SPUI at Malcolm Drive with TSM

Combination Option 2 would provide a SPUI at Malcolm Drive and TSM improvements at all major intersections within the project limits. As part of this option, Gorsuch Road would change to a right-in/right-out intersection, eliminating the current traffic signal at that location.

Combination Option 4 : CFI's at Center Street and Englar Road and a SPUI at Malcolm Drive

Combination Option 4 was developed as an alternative to the TSM improvement identified at Center Street and Englar Road under Combination Option 2. Combination Option 4 would also include a SPUI at the intersection of MD 140 and Malcolm Drive. The remaining intersections within the project limits would be addressed with TSM improvements.

Combination Option 4 also proposes a system of one-way service roads with the interchange ramps to preserve access to properties along MD 140 between Malcolm Drive and Center Street. The ramp/service road would maintain a sixteen-foot outside lane to accommodate on-road bicyclists, as well as five-foot sidewalks and improved pedestrian crossings throughout the project limits. Gorsuch Road would be converted to right-in/right-out access.

Gorsuch Road Option A

Option A provides for the right turn onto Gorsuch Road from northbound MD 140 prior to the commercial strip center through the Hess Service Center. Both the Hess Service Center and Keen's Westminster Motors would be displacements.

Gorsuch Road Option B

Option B provides for the right turn onto Gorsuch Road from northbound MD 140 prior to the Hess Service Station. As a result of this option, the service station, Sub Shop and Keen's Westminster Motors would be displacements.

Mr. Moravec stated that Combination Options 2 and 4 are consistent with the City of Westminster's development plan. A major consideration in the selection of the preferred alternative for MD 140 is the reduction of vehicle delay time on intersecting side streets. He also stated that the selection of the Gorsuch Road option is based on previous discussions with the City of Westminster, concerning preservation of the community's connectivity and character. The Hess Service Station was identified by the City of Westminster as being an important landmark in preserving the character of the community.

Project Team Recommendation

Mr. Moravec stated that the Project Team recommends that Combination Option 4 with Gorsuch Road Option B be carried forward for final design.

Displacements Discussion

Mr. Pedersen asked if there are any displacements at the intersections and are there any access issues. Mr. Moravec stated that approximately eleven businesses are potential displacements. At the intersection of MD 140 and Malcolm Drive a restaurant (Popeye's), and a car rental dealership (Enterprise Rent-A-Car) would be displaced. At the intersection of Cranberry Road/ Ralph Street and MD 140, a gas station (Exxon) and a muffler shop (Midas) would be displaced. North of Old Gorsuch Road, west of MD 140 a sub shop (Sub Stop) and a car dealership (Keene's Westminster Motors) would also be displaced. Mr. Moravec noted that originally the entrance to Old Gorsuch Road was to occur further east closer to the existing intersection. Through coordination with the City of Westminster, it was requested that alternative locations for the access be considered to minimize impacts to the plaza near the intersection which contains several individual businesses. It was also identified as a local landmark, important to maintaining character of the community. Therefore the entrance was moved to its current location. At the intersection of Center Street and MD 140, a convenience store (7-Eleven) and a computer retail store (CMC Computers) would need to be relocated. Finally, at the intersection of Englar Road and MD 140, two gas stations (Amoco and Citgo) would be displaced.

Access Discussion

Mr. Moravec stated that there is some concern in regard to providing split access at Old Gorsuch Road. At the Recommendation Meeting with the Director of OPPE, the project team was asked to examine the possibility of providing a right-in/right-out access point on the south side of MD 140 for Old Gorsuch Road east of the existing location. After the team's evaluation of providing the access, it was determined that a right-out access at Old Gorsuch Road could present a safety hazard, due to vehicles merging on to MD 140 from a stop condition. Providing a merge lane would result in further impact to adjacent businesses.

Access to businesses south of Old Gorsuch Road to the end of the project is maintained either through direct access from MD 140 or adjacent frontage roads. Westminster Crossing Shopping Center has lost some access adjacent to MD 140. Access is being provided further north along Englar Road. The shopping center owner is aware of the purposed project and is coordinating with SHA on new site plans. Access is still available to the Len Stoler car dealership west of MD 140. Access to Carroll Plaza has been maintained from MD 140 and closed along Englar Road between MD140 and Monroe Street. This plaza has three improvement sites currently underway and its operators are aware of the MD 140 improvements. This information has been presented to the Chamber of Commerce for Westminster.

Additional Environmental Issues

Mr. Moravec reported that less than one acre of wetland and approximately 200 feet of stream would be disturbed in the project area. Two locations along the project corridor may require noise mitigation (Monterey Drive and Baronets Court). Only one resident directly affected has attended meetings. An Environment Assessment (EA) was prepared and presented at the Public Hearing. It is anticipated that the Final Environmental Document will be a Finding of No Significant Impact (FONSI).

Pedestrian and Bicyclist Access

Mr. Pedersen asked how bicyclists and pedestrians are accommodated within the project corridor. Mr. Moravec stated that sidewalks are provided along the entire corridor for pedestrians. A pedestrian bridge would be provided at Gorsuch Road to maintain connectivity over MD 140. Bicyclists would share a sixteen foot outside travel lane with motorists. Mr. Pedersen asked how pedestrians and bicyclists would travel through the CFIs. Mr. Moravec stated that pedestrians would cross the intersection in several stages at designated locations. The bicyclists would use the travel lanes, in the same patterns as motorized vehicles. Mr. Harvey Muller stated that the CFI would be a non-traditional travel pattern to both pedestrians and bicyclists. Mr. Moravec agreed that it would be different from what the pedestrians and bicyclists are accustomed to seeing and would require pedestrian signals at intersections, striped crosswalks, harbor areas and lane stripping for bicyclists. Mr. Pedersen stated that more thought should be given to pedestrian and bicyclist movements. Mr. Veeramachaneni stated that the configuration has been well studied in Mexico and has good results when combined with signals. Bicyclist movements are more complex. Mr. Pedersen recommended providing "Jug Handle" configurations at the CFIs to accommodate bicyclists. Mr. Muller noted that there is also some concern about bicyclists traveling to the mall from downtown.

Mr. Pedersen asked if the team's recommendation had been presented to any of the state legislatives representative for the project area. The response was no. Mr. Pedersen asked Ms. Harris to contact the appropriate legislators to inform them of the Carroll County and the City of Westminster's input into the development of the recommended alternative. She should also ask if they would like to briefed on the project. Mr. Doug Simmons asked if it was possible to construct a bicycle path on one side in lieu of a sidewalk. Mr. Moravec's response was that due to the multiple entrances onto MD 140 and limited right-of-way it would be difficult to provide this safely.

Project Segmentation

Mr. Veeramachaneni asked about the logical segments for construction and the construction cost for each section. Mr. Moravec stated that the project could be separated into three segments; from the north termini (Market Street) of the project to the bridge over MD 27 and Maryland Midland Railroad ($24.2 M), from the bridge south to Cranberry Road/ Ralph Street ($19.7M) and finally from Cranberry/ Ralph Street to the south termini (Sullivan Road) of the project ($74.M). He noted that these cost do not include right-of-way or contingencies.

Mr. Pedersen asked Mr. Erik Fisher if there were any additional comments from the City of Westminster. Mr. Fisher asked the team to explain the difficulties encountered when trying to move bicyclists and vehicles through SPUIs and CFIs. These issues were explained to Mr. Fisher and he did not have any additional questions. Mr. Pedersen told the project team that he concurred with the team's recommendation to carry Combination Option 4 with Gorsuch Road Option B forward to final design with the following condition, the bicycle routing issue must be looked at more carefully.

If you have any questions regarding these meeting minutes, please contact the project manager, Ms. Carmeletta T. Harris at 410-545-8522 or at charris@sha.state.md.us.

I concur that the above accurately represents the decisions made by the Administrator at the MD 140 Selected Alternative Meeting. The project team should proceed with final project planning with the proposed improvements for the MD 140 Transportation Improvement Study. These improvements shall consist of Combination Option 4 with Gorsuch Road Option B.

Concurrence:

Mr. Raja Veeramachaneni, Director
Office of Planning and
Preliminary Engineering

6/30/06
Date

Section II
Comparison of Impacts

SECTION II – COMPARISON OF IMPACTS

A series of combination options were developed, following the Public Hearing, providing additional improvement options and aiding in the selection of an alternative. These combination options are described in greater detail in **Section III** of this FONSI. **Table II-1** provides a comparison of the impacts for each combination option developed, as well as the impacts associated with the SHA Preferred Alternative.

Table II-1
Summary of Impacts

Impacts	Combination Option 1 – TSM/TDM Improvement	Combination Option 2 – TSM/TDM w/ SPUI @ Malcolm	Combination Option 3 – TSM/TDM w/CFI @ Malcolm and Market	Combination Option 5 – CFI @ Center, Englar, Malcolm and Market	**SHA Preferred Alternative – Combination Option 4 – SPUI @ Malcolm with CFI @ Center and Englar**
Socioeconomic					
1. Total Displacements	4	9	4	6	**11**
2. Right of Way (acres) Required	27.5	25.4	25.4	38.3	**34.3**
Natural Environment					
1. Streams (lf)	108	108	108	1-92	**192**
2. Wetlands (acres)	0.041	0.032	0.027	0.027	**0.032**
3. Forests (acres)	2.7	2.7	2.8	3.6	**3.4**
Cost (millions)					
Construction Cost	$35-40	$70-75	$60-65	$80-85	**$90-95**
Right-of-Way Cost	$15-20	$36-41	$36-41	$40-45	**$70-75**
Total Cost	$50-60	$106-116	$96-106	$120-130	**$160-170**

Section III
SHA Selected Alternate

SECTION III – SHA PREFERRED ALTERNATIVE

A. PROJECT BACKGROUND

1. Project Location and Description

MD 140 extends from Baltimore City to Emmitsburg and provides an important regional link between employment centers in Baltimore City and Baltimore County to the south, and Pennsylvania and Taneytown, Maryland to the north and west. MD 140 also accommodates local circulation in and around the City of Westminster, which is the County seat and largest urban area in Carroll County. The portion of MD 140 under study extends from Sullivan Road in the north to Market Street in the south, a distance of approximately 2.5 miles. The project location and surrounding areas are shown on **Figures 1 and 2**. The proposed improvements along MD 140 (Baltimore Boulevard) have been developed to address future congestion as well as to improve existing and future traffic safety and transportation operations along the roadway.

2. Existing Conditions

MD 140 traverses through the heart of the City of Westminster and is surrounded mostly by commercial facilities. The entire project area is located within Carroll County's Certified Priority Funding Area (PFA). Numerous businesses are located along or within the vicinity of MD 140 within the PFA. These businesses include restaurants, retail shops, banks and medical clinics. The existing land use pattern for the project area consists largely of commercial uses.

Within the project area, MD 140 is a non-access controlled roadway. Traffic volumes are the highest primarily in the AM and PM peak hours. It is functionally classified as an Other Principal Arterial and the posted speed limit is 45 miles per hour. MD 140 consists of a six-lane divided highway, with 12-foot travel lanes and 10 to 12-foot shoulders throughout the project area. The project area also has an auxiliary lane at several locations in both directions to accommodate access to and from the various businesses along MD 140.

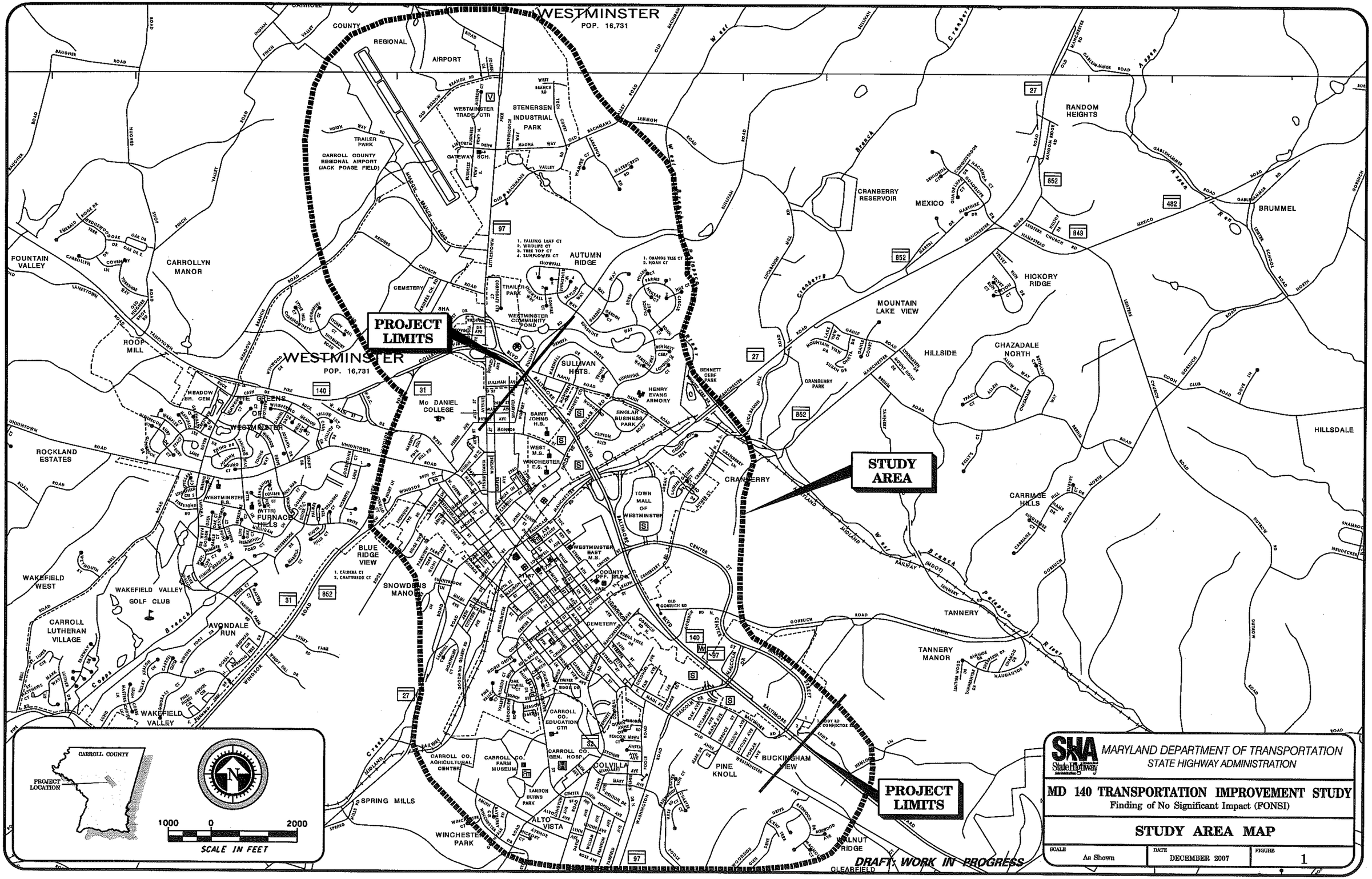

SHA State Highway Administration

MARYLAND DEPARTMENT OF TRANSPORTATION
STATE HIGHWAY ADMINISTRATION

MD 140 TRANSPORTATION IMPROVEMENT STUDY
Finding of No Significant Impact (FONSI)

STUDY AREA MAP

SCALE	DATE	FIGURE
As Shown	DECEMBER 2007	1

D:\DI0000072\I2\CAD\Report figures\FONSI\FONSI-Fg01mi40.dgn
1:8:04 PM
1/22/2008
delp

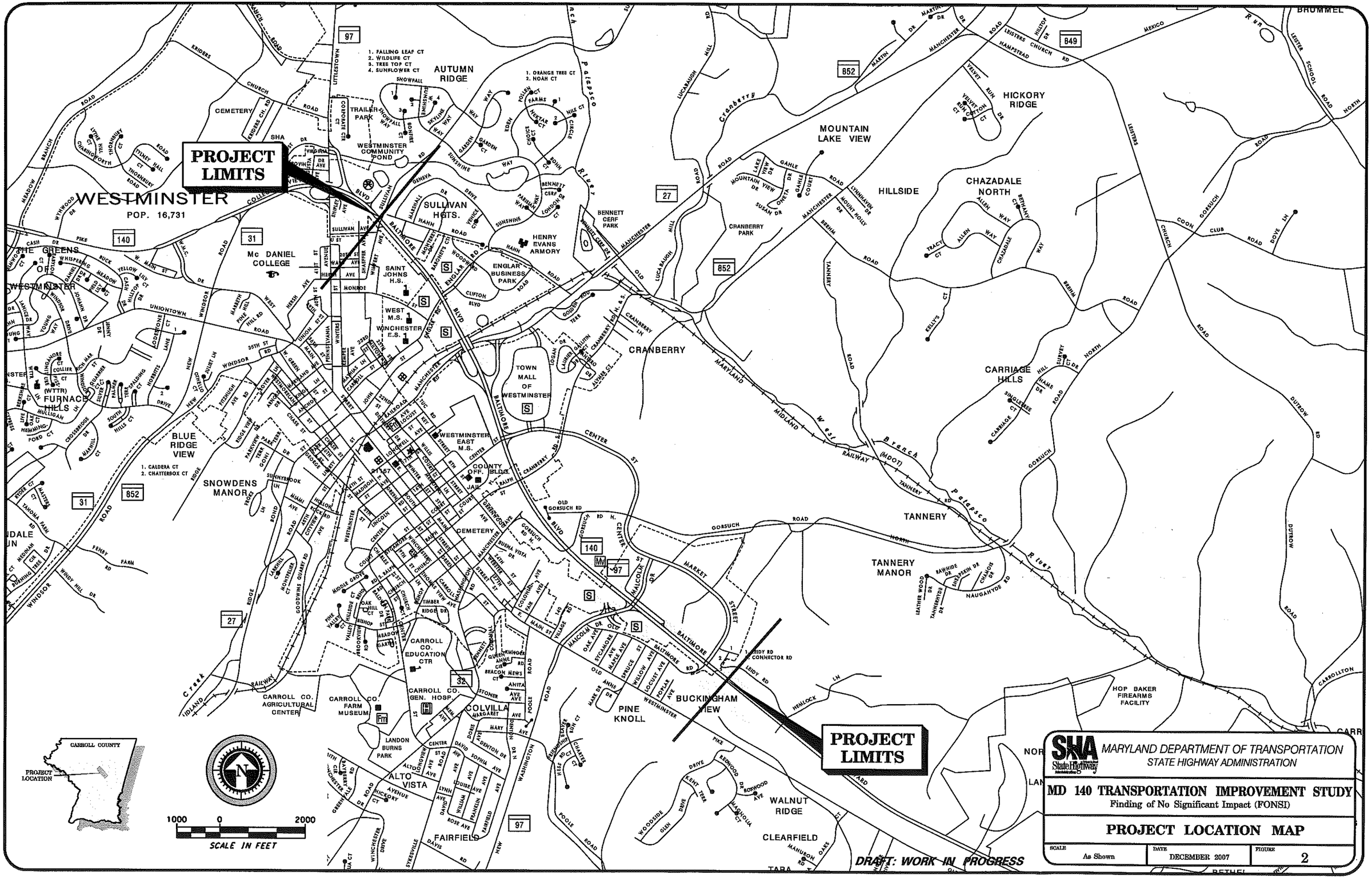
PROJECT LIMITS
WESTMINSTER
POP. 16,731
AUTUMN RIDGE
1. FALLING LEAF CT
2. WILDLIFE CT
3. TREE TOP CT
4. SUNFLOWER CT
1. ORANGE TREE CT
2. NOAH CT
TRAILER PARK
WESTMINSTER COMMUNITY POND
SULLIVAN HGTS.
HENRY EVANS ARMORY
ENGLAR BUSINESS PARK
BENNETT CERF PARK
Mc DANIEL COLLEGE
SAINT JOHNS H.S.
WEST M.S.
WINCHESTER E.S.
TOWN MALL OF WESTMINSTER
WESTMINSTER EAST M.S.
COUNTY OFF. BLDG.
JAIL
CEMETERY
CARROLL CO. EDUCATION CTR
CARROLL CO. GEN. HOSP.
CARROLL CO. AGRICULTURAL CENTER
CARROLL CO. FARM MUSEUM
LANDON BURNS PARK
ALTO VISTA
FAIRFIELD
BLUE RIDGE VIEW
SNOWDENS MANOR
FURNACE HILLS (WTTR)
THE GREENS OF WESTMINSTER
CRANBERRY
CRANBERRY PARK
MOUNTAIN LAKE VIEW
HILLSIDE
HICKORY RIDGE
CHAZADALE NORTH
CARRIAGE HILLS
TANNERY
TANNERY MANOR
PINE KNOLL
BUCKINGHAM VIEW
WALNUT RIDGE
CLEARFIELD
HOP BAKER FIREARMS FACILITY
PROJECT LIMITS
CARROLL COUNTY
PROJECT LOCATION
1000 0 2000
SCALE IN FEET
DRAFT: WORK IN PROGRESS
MARYLAND DEPARTMENT OF TRANSPORTATION
STATE HIGHWAY ADMINISTRATION
MD 140 TRANSPORTATION IMPROVEMENT STUDY
Finding of No Significant Impact (FONSI)
PROJECT LOCATION MAP
SCALE: As Shown
DATE: DECEMBER 2007
FIGURE: 2
D:\DI0000727\I2\CAD\Report figures\FONSI\FONSI-Fg02ml40.dgn
deip
1/22/2008
1:48:37 PM

3. Purpose and Need

The purpose of this study is to develop transportation options to meet the future travel demands along MD 140 and to improve future transportation operations, capacity problems, and overall accessibility within the limits of the project.

The current MD 140 roadway will be inadequate to handle future traffic volumes. By 2025, all intersections within the project area, except the eastbound and westbound MD 24 ramps at MD 27, are expected to fail. There is also a lack of pedestrian connections and bicycle access within the corridor. Currently, the MD 140 rate of rear-end collisions is significantly higher than the statewide average rate of a similar state road system, indicating congestion resulting from large peak hour traffic volumes, multiple access locations and signalized intersections. Furthermore, the higher forecasted future traffic volumes on this roadway are likely to contribute to more accident incidents if the roadway is not improved.

The projected growth within the MD 140 corridor in Carroll County is a leading reason for the forecasted increase in traffic volumes in the future. Therefore, the operational aspects of MD 140 will be inadequate to handle the anticipated traffic volumes for the design year 2025.

4. Traffic Conditions

MD 140 is a primary roadway for central and western Carroll County residents, including residents of the City of Westminster. As previously stated, MD 140 within the project area is a non-access controlled roadway, and traffic volumes are the highest primarily in the AM and PM peak hours. A study of existing traffic conditions was conducted in 2006. Traffic count data was collected at each of the intersections within the study area. The resulting data was then post-processed and balanced throughout the study corridor using Round 6 of the travel forecasting model maintained by the Baltimore Metropolitan Council. During this effort the Average Daily Traffic (ADT) volumes were found to vary throughout the corridor between 44,750 to 57,150

vehicles per day, with the highest volumes occurring along MD 140 from Malcolm Drive to MD 27. The 2006 turning movement volumes and ADTs are provided in **Appendix B**.

Future (2025) ADTs and turning movement volumes were developed using Round 6 of the travel forecasting model as well. Comparison of the two sets of data show that the ADTs on MD 140 within the project area are projected to increase from 2006 to 2025 at a rate of approximately 10 percent toward the northwest end of the corridor, and at a rate of approximately 40 percent toward the southeast end of the corridor, with varying rates of growth throughout the regions in between corridor. The 2025 turning movement volumes and ADTs are provided in **Appendix B**.

Critical Lane Analysis, which is a standard method of evaluating an intersection, was performed on the 2006 Existing and 2025 No Build turning movement volumes using Round 6 of the travel forecasting model. The level of service (LOS), which is the metric that results from Critical Lane Analysis, is a measure of the congestion experienced by drivers and ranges from "A" to "F". In general, LOS A (free flow with no congestion) through LOS D (approaching unstable flow) is acceptable while LOS E (approaching capacity of the highway) and LOS F (stop-and-go condition) indicates congested traffic flow. LOS analyses are conducted for the peak hours of a typical day. The results of these analyses are summarized in **Table III-1**.

Examination of **Table III-1** shows that all of the signalized intersections within the project area and the MD 140 / MD 27 interchange ramp connections along MD 140 operate at an acceptable LOS (LOS A to D) under current traffic conditions during the AM peak hour. During the PM peak hour, while many of the signalized intersections within the project area and all of the MD 140 / MD 27 interchange ramp connections along MD 140 operate at an acceptable LOS, the intersections of MD 140 with Ralph Street / Cranberry Road, Gorsuch Road, and Malcolm Drive all approach a failing level of service (LOS E), and the intersection of MD 140 and Center Street functions at a failing LOS (LOS F) under current traffic conditions. However, as stated previously, under the 2025 no-build condition, all of these intersections and interchanges are expected to fail with the exception of the MD 140 / MD 27 interchange during the AM peak hours. Substantial increases in both through traffic and turning volumes are reasons for these failures by 2025.

Table III-1
Intersection Capacity Analysis
(Critical Lane Analysis Methodology)

Crossroad	Intersection Capacity Analysis							
	Direction	Peak Hour						Control
		AM			PM			
		CLV	LOS	V/C	CLV	LOS	V/C	
A. 2006 Existing Condition								
Market St./Old Baltimore Road	North-South	1,044	B	0.65	1,174	C	0.73	Signal
Malcolm Drive / MD 97	North-South	1,216	C	0.76	1,562	E	0.98	Signal
Gorsuch Road	North-South	1,164	C	0.73	1,529	E	0.96	Signal
Cranberry Road / Ralph Street	North-South	1,233	C	0.77	1,552	E	0.97	Signal
Center Street	North-South	1,296	C	0.81	1,631	F	1.02	Signal
WB MD 140 Ramp at MD 27	North	1,043	B	0.65	1,284	C	0.80	Signal
EB MD 140 Ramp at MD 27	South	720	A	0.45	1,167	C	0.73	Signal
Englar Road	North-South	1,315	D	0.82	1,335	D	0.85	Signal
Sullivan Road	North-South	1,291	C	0.81	1,093	B	0.68	Signal
B. 2025 No Build Condition								
Market St./Old Baltimore Road	North-South	2,843	F	1.78	4,020	F	2.51	Signal
Market St./Old Baltimore Road with improvements*	North-South	2,177	F	1.36	2,181	F	1.36	Signal
Malcolm Drive / MD 97	North-South	1,801	F	1.13	2,217	F	1.39	Signal
Malcolm Drive / MD 97 with improvements*	North-South	1,807	F	1.13	2,099	F	1.31	Signal
Gorsuch Road	North-South	1,846	F	1.15	2,258	F	1.41	Signal
Cranberry Road / Ralph Street	North-South	1,890	F	1.18	2,068	F	1.29	Signal
Center Street	North-South	1,848	F	1.16	2,437	F	1.52	Signal
WB MD 140 Ramp at MD 27	North	1,480	E	0.93	1,018	B	0.64	Signal
EB MD 140 Ramp at MD 27	South	1,445	D	0.90	803	A	0.50	Signal
Englar Road	North-South	1,774	F	1.11	1,991	F	1.24	Signal
Sullivan Road	North-South	2,321	F	1.45	1,817	F	1.14	Signal

Note: * Includes the development of Westminster Market Place and Center Street Extension.

5. Accident Statistics

An accident analysis was completed for the MD 140 project area for a three-year period from 2003 to 2005. Results of this analysis indicate that a total of 346 police-reported accidents occurred on MD 140 from Leidy Road to Sullivan Road during this time period (see **Table III-2**). These accidents resulted in a total accident rate of 220.6 accidents per every 100 million-vehicle miles of travel (acc/100mvm). This accident rate is consistent with the statewide average rate of 247.9 acc/100mvm for all state maintained urban highways with no access controls. There were two police reported fatal accidents in this area over the three-year study period. Rear-end collisions are significantly higher on MD 140 than the statewide average, indicating congestion problems associated with traffic volumes and multiple access locations and signalized intersections on MD 140.

Table III-2
Accident Summary for MD 140 from Sullivan Road to Market Street
(2003 to 2005)

Collision Type	Number of Accidents			Total Accidents	Study Rate per 100 MVM**	Statewide Average Rate
	2003	2004	2005			
Angle	11	10	16	37	23.6	38.1
Rear End	60	71	62	193	123.1*	91.8
Fixed Object	13	7	12	32	20.4	22.6
Opposite Direction	0	4	5	9	5.7	4.3
Sideswipe	5	7	9	21	13.4	17.6
Left Turn	10	2	4	16	10.2	27.2
Pedestrian	2	2	0	4	2.6	7.3
Parked Vehicle	0	2	1	3	1.9	4.2
Other	14	8	9	31	19.8	30.3
Total Accidents	**115**	**113**	**118**	**346**	**220.6**	**247.9**

Note:
* Statistically significantly higher than the statewide average rate for similar State maintained highways or composite section.
**MVM - Million Vehicle Miles.

The higher traffic volumes forecasted on this roadway in the future are likely to increase accident incidents if the roadway is not improved. The rate of rear end collisions, although decreasing in recent years primarily due to the construction of Phases I and II of the previous MD 140 study, is

significantly higher than the statewide average rate of similar state road systems. These incidents are anticipated to increase with future projected traffic volumes.

6. System Linkage/Road Function

MD 140 is a major arterial providing both local and regional north-south travel. It is a main commuting route for residents of Carroll County and southern Pennsylvania who travel to the Baltimore Metropolitan area for employment and leisure activities. MD 140 is functionally classified as an Other Principal Arterial on the Federal Functional Classification System and as an Intermediate Arterial on the State Functional Classification System. Other major roadways MD 140 connects to include MD 97 and MD 27.

7. County Comprehensive Plan Compatibility

There are three Master Plans related to this project area. They include the 2000 Carroll County Master Plan (The County Plan), the 1998 City of Westminster Comprehensive Plan (The City Plan) and the 1985 Westminster and Environs Comprehensive Plan. Carroll County is preparing the Transportation Element of the County Master Plan and the Westminster Environs Master Plan update, both of which have transportation planning studies being conducted.

One of the City Plan goals is to improve access to commercial and industrial areas including the MD 140 corridor by expanding, enhancing and improving the vehicular capacity as well as the LOS along MD 140, and providing a corridor with pedestrian accessibility.

8. Local Concerns

Carroll County elected officials have identified this project as a transportation need. There is concern that regardless of whether or not the Westminster Bypass is reinstated on the master plans, the existing MD 140 corridor still needs improvement. The citizens within and surrounding the project area expressed concern that improvements to the existing MD 140 corridor would result in too great of a change to the character of the community and result in an

expensive project without solving any of the traffic problems. Despite the degree of improvement made to the existing MD 140 corridor, many residents remained insistent that their preference is to bring back the Westminster Bypass.

B. ALTERNATIVES RETAINED FOR DETAILED STUDY (ARDS)

1. Alternatives Presented at the Public Hearing

Following review of the Environmental Assessment and comments received through public workshops and the focus group, four of the original six alternates presented Alternates Public Workshop were retained for detailed study and presented at the Location/Design Public Hearing on October 26, 2004. The four Alternatives Retained for Detail Study (ARDS) included: Alternative 1 - No-Build; Alternative 2 - TSM/TDM; Alternative 5 - Single-Point Urban Interchange (SPUI); and Alternative 6 - Half-Bridge Interchanges. In addition, a fifth alternate (Alternative 7) was introduced following agency concurrence on the ARDS. Alternative 7 was introduced based on a new operational design concept (continuous flow intersection), which was recommended for consideration in the MD 140 corridor. A cost comparison table (**Table III-3**) and level-of-service table (**Table III-4**) for each of the ARDS have been included on page 11. As presented at the Alternate Public Workshop, each of the alternates can be mixed or matched with other alternates based on the location of intersection improvements within the corridor. A description of the ARDS is as follows:

a. Alternative 1 – No-Build

Alternative 1 was recommended for detailed study and serves as a baseline for judging the impacts and benefits associated with the other proposed alternatives. The No-Build Alternative includes no major improvements along existing MD 140 within the study limits. Normal highway maintenance such as resurfacing and re-striping, vegetation clearance of State owned right-of-way and signing and safety improvements would be implemented as needed. Recent improvement plans for the MD 27 interchange and the bridge over MD 97 were already

Table III-3
Preliminary Construction and Right-of-Way Cost Estimates (in Millions)

Alternative	Construction Cost	Right-of-way Costs
Alternative 1 – No Build	$0	$0
Alternative 2 – TSM/TDM	$27-$33	$34-$37
Alternative 5 – SPUI	$132-$140	$65-$68
Alternative 6 – Half-Bridge	$114-$122	$59-$62
Alternative 7 - CFI	$50-$55	$43-$46

Table III-4

Forecast Year = 2025	Sullivan Road	Englar Road	Center Street	Cranberry Road/ Ralph Street		Gorsuch Road		Malcolm Drive	Market Street
				N	S	N	S		
Alt 1 (No-Build)	AM: F (1.45) PM: F (1.14)	AM: F (1.11) PM: F (1.24)	AM: F (1.16) PM: F (1.52)	AM: F (1.18) PM: F (1.29)	n/a	AM: F (1.15) PM: F (1.41)	n/a	AM: F (1.13) PM: F (1.31)	AM: F (1.36) PM: F (1.36)
Alt 2 (TSM/TDM)	AM: B (0.70) PM: D (0.84)	AM: F (1.04) PM: F (1.11)	AM: F (1.09) PM: F (1.08)	AM: D (0.90) PM: E (0.99)	n/a	AM: D (0.88) PM: F (1.04)	n/a	AM: E (0.93) PM: F (1.11)	AM: E (0.99) PM: F (1.11)
Alt 5 (SPUI)	AM: B (0.70) PM: D (0.84)	AM: A (0.46) PM: E (0.95)	AM: B (0.64) PM: D (0.90)	AM: A (0.35) PM: C (0.81)	AM: B (0.71) PM: A (0.61)	AM: A (0.44) PM: E (0.95)	AM: A (0.42) PM: A (0.46)	AM: A (0.48) PM: D (0.90)	AM: E (0.97) PM: F (1.08)
Alt 6 (Half-Bridge)	AM: B (0.70) PM: D (0.84)	AM: A (0.48) PM: E (0.96)	AM: D (0.88) PM: E (0.95)	AM: A (0.35) PM: C (0.81)	AM: D (0.89) PM: B (0.65)	AM: A (0.44) PM: E (0.95)	AM: D (0.87) PM: A (0.38)	AM: E (0.93) PM: E (0.96)	AM: E (0.97) PM: F (1.08)
Alt 7 (CFI)	AM: B (0.70) PM: D (0.84)	AM: E (0.97) PM: E (0.98)	AM: F (1.02) PM: F (1.14)	AM: D (0.90) PM: E (0.99)	n/a	AM: D (0.88) PM: F (1.04)	n/a	AM: E (0.99) PM: F (1.18)	AM: E (0.99) PM: F (1.15)

Level-of-Service

completed and considered as existing conditions when evaluating the No-Build Alternative. This alternative does not satisfy the purpose and need of the project and therefore was not selected.

b. Alternative 2 – Transportation System Measures/Travel Demand Management (TSM/TDM)

Alternative 2 was recommended for detailed study because of the overall improvements in operations and accessibility achieved through relatively minor intersection improvements, signal optimization, access consolidation, and pedestrian and bicycle enhancements. Where feasible, components of Alternative 3 – Mainline Widening, such as the continuous auxiliary lane and fourth through lane where right-of-way exists, have been incorporated to assist in the overall operations and capacity needs for the corridor. Alternative 2 provides operational benefits to the corridor at the lowest cost and with lesser impacts than the other build alternatives. This alternative somewhat satisfies the purpose and need of the project through enhancements to the operations and safety within the MD 140 corridor. However, Alternative 2 would not address the long-term demand for improvements to roadway capacity as an end to end alternative, and therefore was not selected.

c. Alternative 5 – SPUI Interchanges

Alternative 5 was recommended for detailed study as a comprehensive, corridor-wide improvement strategy. Alternative 5 provides for Single Point Urban Interchanges at the three most congested intersections in the project area: Malcolm Drive, Center Street, and Englar Road. Alternative 5 also incorporates a system of one-way service roads to separate local and through traffic, while preserving access to properties along MD 140, between Malcolm Drive and Center Street. As with Alternative 2, these improvements satisfy the purpose and need for the project through more efficient roadway operations and increased safety throughout the corridor. Alternative 5 also provides the greatest amount of capacity on mainline MD 140 with minimal delay. As design reviews were conducted, SHA determined it would be necessary to employ a larger structure to accommodate the simultaneous turning movements of four of the largest interstate tractor-trailer vehicles recognized by the American Association of State Highway and

Transportation Officials (AASHTO), the WB-67. This step was taken to ensure a planning footprint large enough to account for a worst case scenario, if this design were chosen for implementation. However, Alternative 5 changes the character of the MD 140 corridor and divides the community; therefore this alternative was not selected as an end to end alternative.

d. Alternative 6 – Half-Bridge Interchanges

Alternative 6 was recommended for detailed study as an effective interchange alternative with less environmental and socio-economic impacts. Alternative 6 is a series of partial interchanges at the intersections of Englar Road, Center Street and Malcolm Drive. All intersections, except for Market Street, will operate at LOS E or better. Alternative 6 has a lower construction cost, fewer right-of-way impacts, and less property displacements when compared to Alternative 5. Alternative 6 meets the purpose and need for the study by providing enhanced roadway operations, increased capacity, and increased safety throughout the corridor. Similar to Alternative 5, Alternative 6 changes the character of the MD 140 corridor and divides the community; therefore this alternative was not selected.

e. Alternative 7 – Continuous Flow Intersections (CFI)

Alternative 7 was added to the list of Alternates Retained for Detailed Study due to the substantial reduction in displacements as compared to Alternatives 5 and 6, while also providing improved traffic flow conditions when compared to Alternative 2.

Alternative 7 is designed to move the left-turn conflicts for the mainline out of the main intersection. This is accomplished by crossing the left turning traffic and the oncoming through traffic at a signalized left turn bay placed several hundred feet before the intersection. Traffic from this early left turn bay is fed into a special "CFI leg", which in turn empties into the cross street at the main signalized intersection. The signals at the left turn bay and the main intersection are operated by a single controller and coordinated to provide smooth traffic flow.

Alternative 7 includes a CFI at the intersections of Englar Drive, Center Street, Malcolm Drive, and Market Street. The early left turn bays and "CFI legs" are included for both directions of mainline MD 140 for the intersections of Englar, Center and Malcolm, while the Market Street intersection includes the CFI for eastbound MD 140 only. All of the remaining intersection improvements identified are similar to Alternative 2, TSM/TDM Improvements.

While the LOS between Alternative 2 and Alternative 7 is similar, the delay at each intersection will be minimized under Alternative 7 due to the CFI configuration and the elimination of an additional phase to the traffic signal. This alternative, just as Alternative 2, satisfies the purpose and need for the project through improvements to operations and safety. Alternative 7 also results in a minor capacity improvement to the corridor by reducing delay at the major intersections. However, Alternative 7 would not best meet the long-term demand for improvements to roadway capacity as an end to end alternative, and therefore was not selected.

2. Combination Options Developed

Approximately 140 people attended the MD 140 Location/Design Public Hearing on October 26, 2004, at which both public testimony and comments were taken. The comments, testimony, and letters received were assessed to determine which improvement options the community favored and whether additional study would be necessary. The public responses are included in this document as **Appendix A**.

Based on the information received, the MD 140 Study Team met and developed a series of combination options for evaluation, to aid in the identification of a preferred alternative for the project. A description of the combination options developed and the ARDS from which they were derived are as follows:

a. Combination Option 1 – TSM/TDM Improvements (Alternative 2)

This combination option maintains all of the TSM/TDM improvements associated with Alternative 2. This option provides relatively minor intersection improvements, signal

optimization, access consolidation, and pedestrian and bicycle enhancements. This combination option provides measurable operational benefits to the corridor with a comparatively low level of cost and impact, but provides only minimal improvement to roadway capacity. Therefore, Combination Option 1 was not selected.

b. Combination Option 2 – TSM/TDM with SPUI at Malcolm (Alternative 5 modified with Alternative 2)

This combination option maintains all of the TSM/TDM improvements associated with Alternative 2 with the addition of a SPUI located at the most congested intersection in the corridor, Malcolm Drive. However, this option has a greater average intersection delay than Combination Option 4. Therefore, this Combination Option was not selected.

c. Combination Option 3 – TSM/TDM with CFI at Malcolm and Market (Alternative 7 with Alternative 2)

This combination option maintains all of the TSM/TDM improvements associated with Alternative 2 with the addition of a CFI at both Malcolm Drive and Market Street. As previously described, a CFI is designed to move the left-turn conflicts for the mainline out of the main intersection. This is accomplished by crossing the left turning traffic and the oncoming through traffic at a signalized left turn bay placed several hundred feet before the intersection. Traffic from this early left turn bay is fed into a special "CFI leg", which in turn empties into the cross street at the main signalized intersection. The signals at the left turn bay and the main intersection are operated by a single controller and coordinated to provide smooth traffic flow. Under this option, the early left turn bays and "CFI legs" are included for both directions of mainline MD 140 for the intersection of Malcolm, while the Market Street intersection includes the CFI for eastbound MD 140 only. Similar to Combination Option 1, this combination option provides measurable operational benefits to the corridor at comparatively low level of cost and impact, but provides only minimal improvement to roadway capacity. Therefore, Combination Option 3 was not selected.

d. Combination Option 4 – SPUI at Malcolm Drive with CFI at Center and Englar (Alternative 5 modified with Alternative 7)

This combination option includes the CFI improvements at Center Street and Englar Road associated with Alternative 7 with the large footprint SPUI at Malcolm Drive (Alternative 5 modified). This improvement is similar to Combination Option 2 with the exception of the CFI improvements. This option provides the best improvement to average intersection delay in the corridor without dividing the community. Therefore, this Combination Option was identified as the SHA Preferred Alternative.

e. Combination Option 5 – Continuous Flow Intersections (CFI) Alternative 7)

This combination option introduces CFIs at the intersections of Englar Drive, Center Street, Malcolm Drive and Market Street (Alternative 7). All of the remaining intersection improvements identified are similar to Alternative 2. While this option improves the average intersection delay throughout the corridor, it does not provide a greater operational improvement than Combination Option 4. Therefore this option was not selected.

f. Gorsuch Road Options A and B

During the evaluation of Combination Options 2 and 4, concerns were raised about potential impacts to the strip business center located at the existing intersection of Gorsuch Road. Additionally, concerns were raised about the need to promote connectivity in the community, specifically for pedestrians crossing MD 140 in this location. For both Options A and B, a pedestrian bridge over MD 140 from Gorsuch Road on the north side of MD 140 to the Boston Inn on the south side of MD 140 is proposed. Option A provides for the right turn onto Gorsuch Road from eastbound MD 140 prior to the commercial strip center, through the Hess Service Center. Both the Hess Service Center and Keene's Westminster Motors are identified as displacements. Option B provides for the right turn onto Gorsuch Road from eastbound MD 140

prior to the Hess Service Station. As a result of this option, the Sub Shop and Keene's Westminster Motors are identified as displacements.

C. DESCRIPTION OF SHA PREFERRED ALTERNATIVE

Following the Public Hearing and the development of the combination options, several team meetings were conducted to evaluate these new scenarios. After coordination with the elected officials from Carroll County and the Town of Westminster, the State Highway Administration selected Combination Option 4, with Gorsuch Road Option B, for the MD 140 Improvement Project from Sullivan Road to Market Street. Combination Option 4 was developed as an enhanced alternative that would compliment the traditional TSM improvements identified at Center Street and Englar Road under Combination Option 2. At these locations, MD 140 would be reconstructed at grade to accommodate CFI's, and a large footprint SPUI would be constructed at Malcolm Drive. The remaining intersections within the project area would be treated with TSM improvements. **Figures 3 through 6** illustrate the SHA Preferred Alternative.

Combination Option 4 best accommodates the concerns and goals of the public, local elected leaders and SHA officials by improving traffic operations and decreasing travel time delays without further dividing the MD 140 corridor and changing the overall character of the area. In addition, sidewalks and crosswalks are included as part of the SHA Preferred Alternative to provide safer pedestrian mobility, including a pedestrian bridge at the intersection with Gorsuch Road. Outside travel or auxiliary lanes have been designed to be 16 feet wide in order to accommodate bicycle traffic along MD 140. In addition, each of the proposed intersection improvements have been designed to accommodate all modes of transportation; pedestrians, bicyclists, automobiles and interstate tractor-trailers. The SHA's goal during the design phase will be to further minimize property impacts where possible and to work with the operators of local businesses to identify and address concerns specific to each establishment.

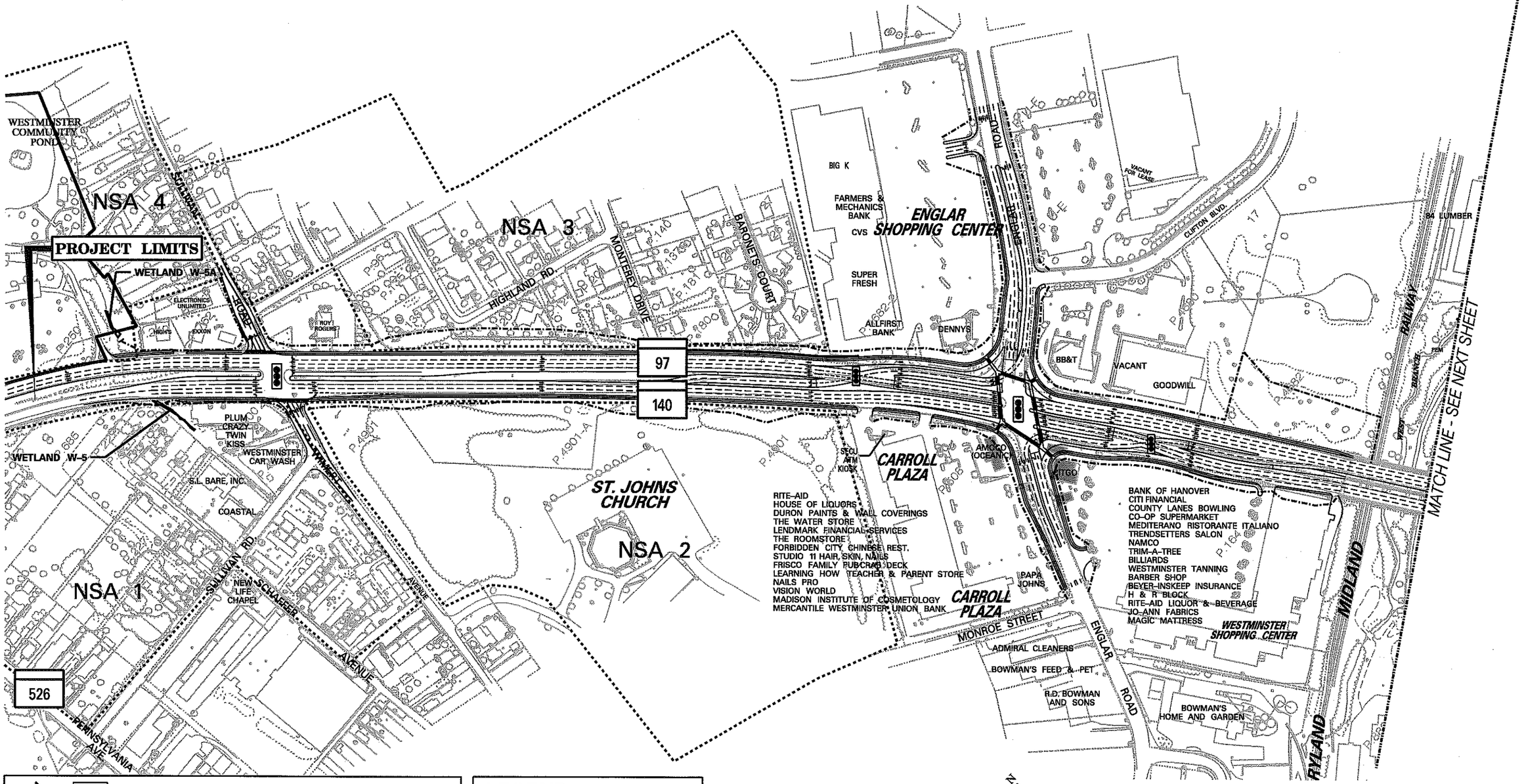

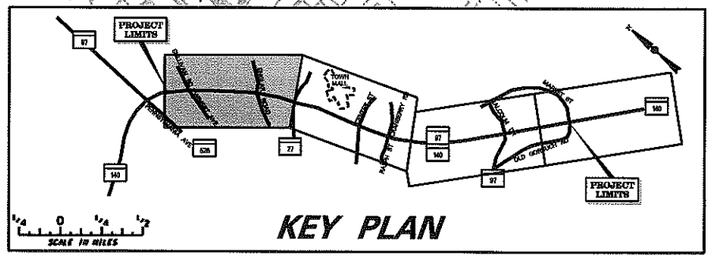

KEY PLAN

LEGEND

- Existing Right-Of-Way Line
- Proposed Right-Of-Way
- NSA 6 — Noise Sensitive Areas
- Displacements

150 0 300
SCALE IN FEET

DRAFT: WORK IN PROGRESS

SHA State Highway Administration

MARYLAND DEPARTMENT OF TRANSPORTATION
STATE HIGHWAY ADMINISTRATION

MD 140 TRANSPORTATION IMPROVEMENT STUDY
Finding of No Significant Impact (FONSI)

SHA PREFERRED ALTERNATIVE
(Combination Option 4 w/Gorsuch Road Option B)

SCALE	DATE	FIGURE
As Shown	DECEMBER 2007	3

delp 1/22/2008 0:\DI00000727\12\CAD\Report figures\FONSI\FONSI-Fg03ml40.dgn 1:19:34 PM

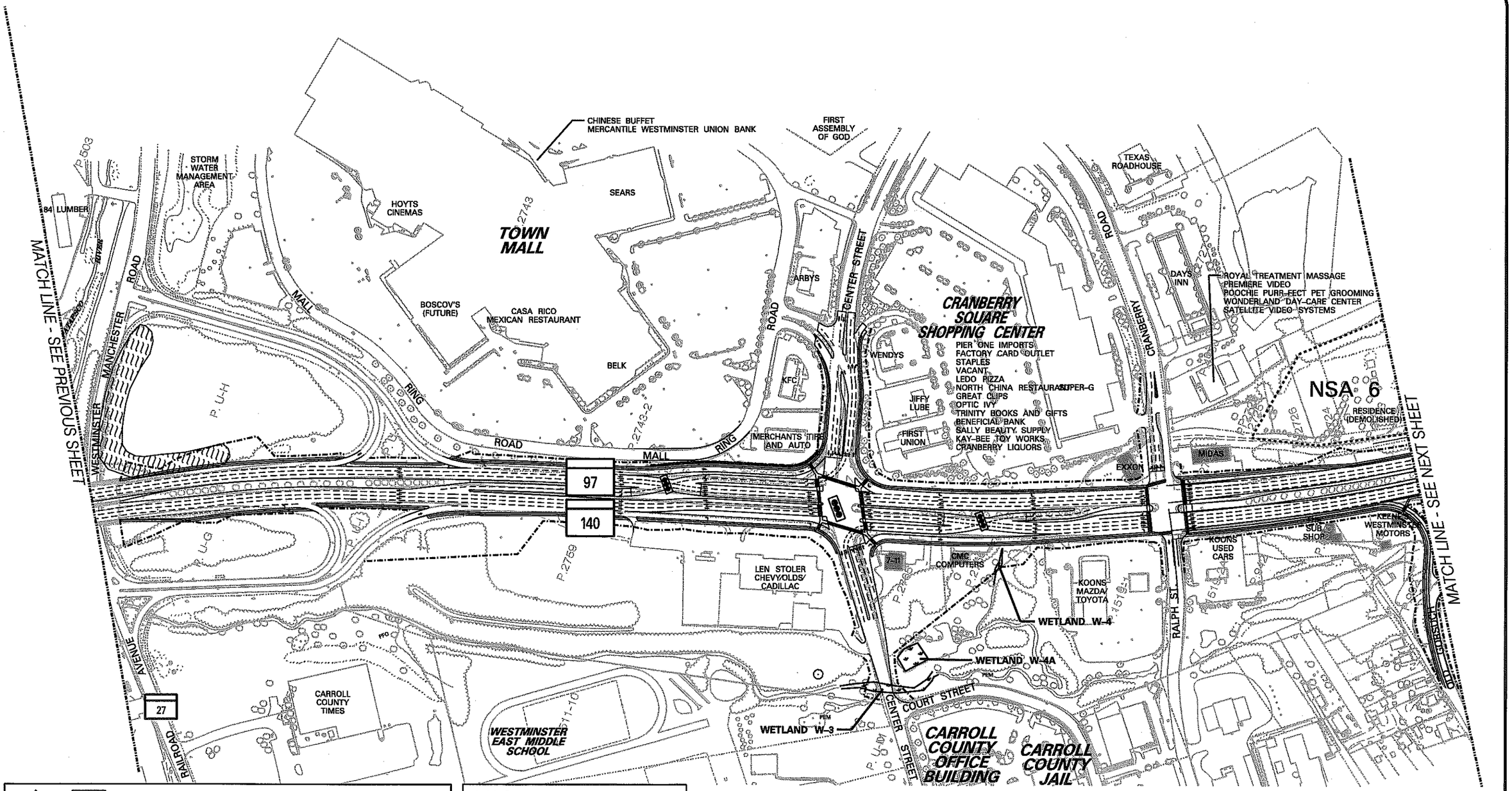

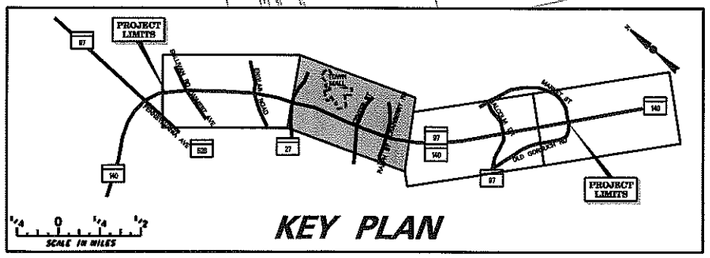

KEY PLAN

LEGEND

- Existing Right-Of-Way Line
- Proposed Right-Of-Way
- NSA 6 — Noise Sensitive Areas
- Displacements

150 0 300
SCALE IN FEET

DRAFT: WORK IN PROGRESS

SHA State Highway Administration

MARYLAND DEPARTMENT OF TRANSPORTATION
STATE HIGHWAY ADMINISTRATION

MD 140 TRANSPORTATION IMPROVEMENT STUDY
Finding of No Significant Impact (FONSI)

SHA PREFERRED ALTERNATIVE
(Combination Option 4 w/Gorsuch Road Option B)

SCALE	DATE	FIGURE
As Shown	DECEMBER 2007	4

delp 1/22/2008 0:\DI000007\12\CAD\Report figures\FONSI\FONSI-Fg04mi40.dgn 1:20:55 PM

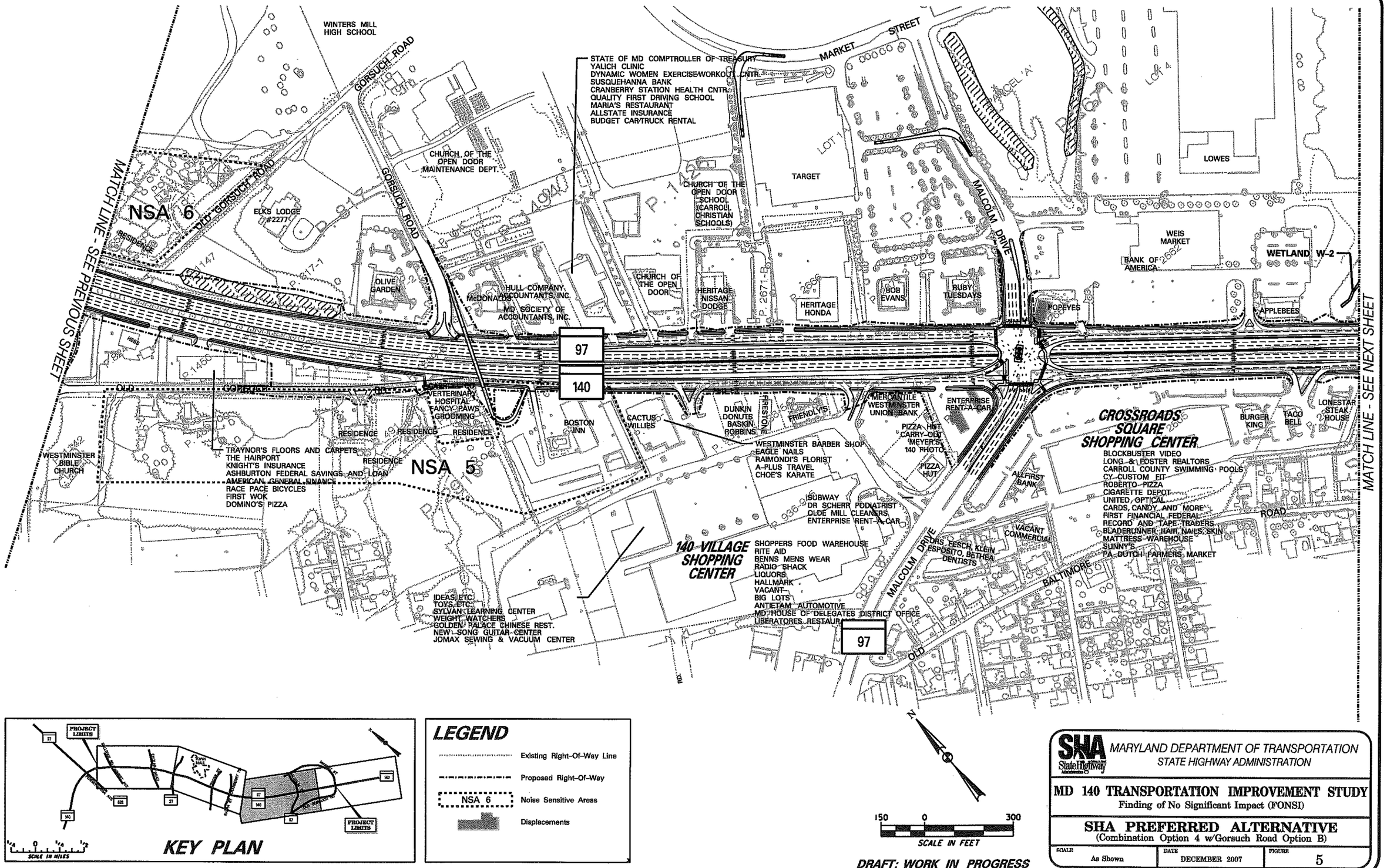

LEGEND

- Existing Right-Of-Way Line
- Proposed Right-Of-Way
- NSA 6 — Noise Sensitive Areas
- Displacements

N

150 0 300

SCALE IN FEET

DRAFT: WORK IN PROGRESS

SHA State Highway Administration

MARYLAND DEPARTMENT OF TRANSPORTATION
STATE HIGHWAY ADMINISTRATION

MD 140 TRANSPORTATION IMPROVEMENT STUDY

Finding of No Significant Impact (FONSI)

SHA PREFERRED ALTERNATIVE

(Combination Option 4 w/Gorsuch Road Option B)

SCALE	DATE	FIGURE
As Shown	DECEMBER 2007	5

delp
1/22/2008
O:\DI0000727\V2\CAD\Report figures\FONSI\FONSI-Fg05mi40.dgn
1:21:49 PM

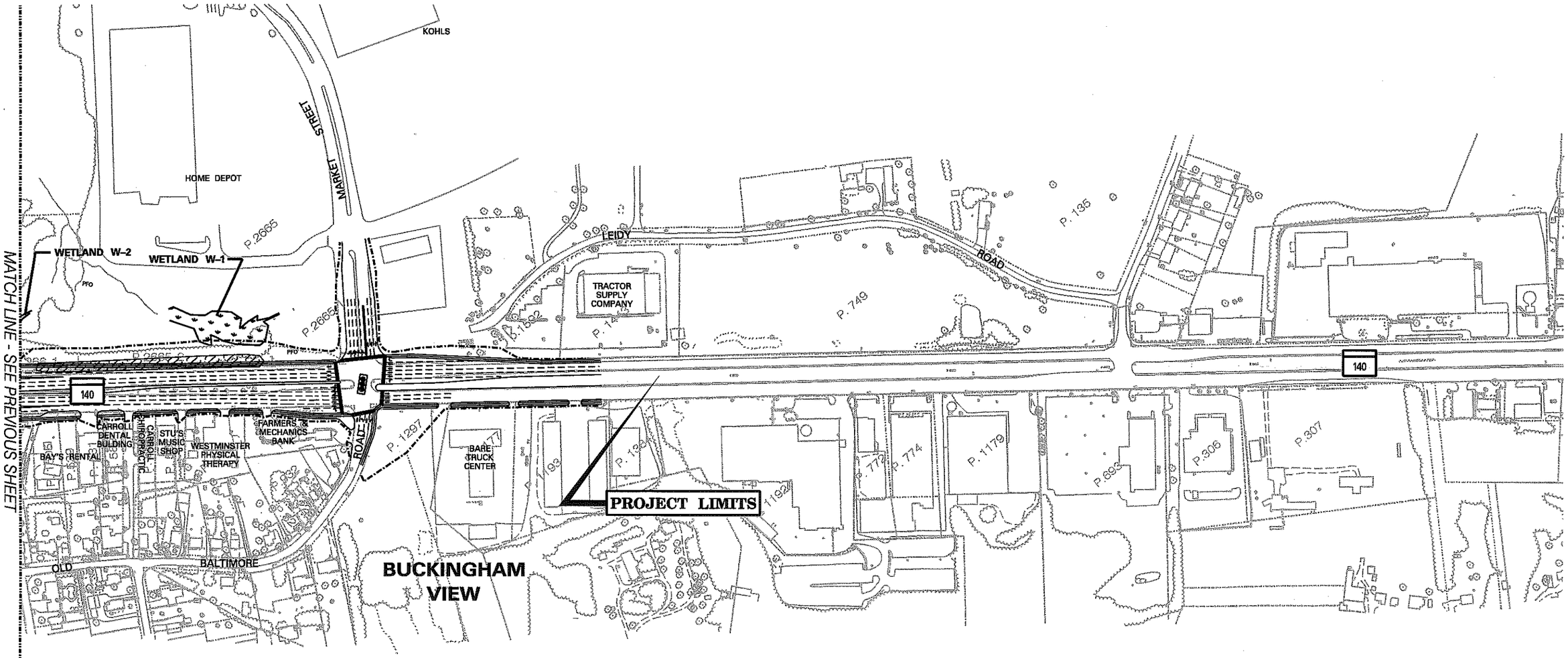

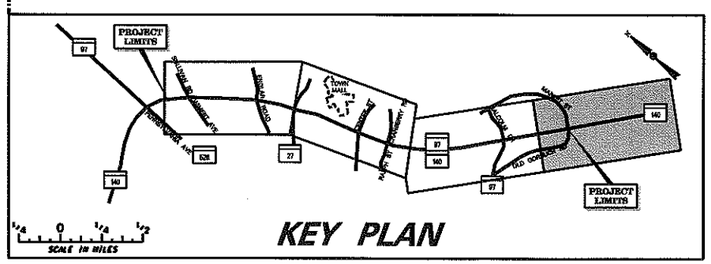

LEGEND

- Existing Right-Of-Way Line
- Proposed Right-Of-Way
- NSA 6 — Noise Sensitive Areas
- Displacements

N

150 0 300

SCALE IN FEET

DRAFT: WORK IN PROGRESS

MARYLAND DEPARTMENT OF TRANSPORTATION
STATE HIGHWAY ADMINISTRATION

MD 140 TRANSPORTATION IMPROVEMENT STUDY
Finding of No Significant Impact (FONSI)

SHA PREFERRED ALTERNATIVE
(Combination Option 4 w/Gorsuch Road Option B)

SCALE	DATE	FIGURE
As Shown	DECEMBER 2007	6

deip 1/22/2008 0:\Di0000727\i2\CAD\Report figures\FONSI\FONSI-Fg06mi40.dgn 1:22:54 PM

D. ENVIRONMENTAL CONSEQUENCES OF SHA PREFERRED ALTERNATIVE

The MD 140 project area is located in a highly commercialized area, and therefore the majority of environmental consequences are related to human environmental features. No impacts to cultural resources, including historic buildings or districts and archeological sites, are anticipated with the SHA Preferred Alternative. Additionally, no impacts are anticipated to any low income or minority populations, rare, threatened or endangered species, or floodplains.

1. Socio-economic Environment

a. Displacements and Right-of-Way Acquisitions

The SHA Preferred Alternative would displace 11 commercial properties and would not displace any residential properties. SHA will work with the commercial property owners to try to provide a similarly visible location in the study area. The following is a summary of the commercial business and retail property displacements in the project area:

- Amoco (Oceanic)
- Citgo
- 7-11
- CMC Computing
- Exxon
- Midas
- The Sub Shop
- Keene's Westminster Motors
- Mercantile Westminster Union Bank
- Enterprise Rental Car Sales
- Popeye's Restaurant

An estimated total of 34.3 acres of right-of-way would be required from a total of 95 properties. Fifteen of the 95 properties are residential, three of which are zoned residential but are currently undeveloped, and three others are church property. These impacts to residential properties are only strip takings along the right-of-way. The 77 remaining parcels are commercial or institutional. Most of the land required for right-of-way is currently being used as parking lots, driveway access locations, and mown grass areas along the mainline of MD 140 and its intersections. These ROW acquisitions will enable five-foot sidewalks, improved pedestrian crossings, and a 16-foot outside travel lane with the ability to accommodate bicyclists. For the majority of the businesses located along the corridor that will be impacted by ROW needs, their parking lot facilities will not be affected. For those businesses with parking lots affected by the proposed alternatives, the SHA Office of Real Estate will work with the property owners during the design and construction phases concerning impacts to the property and traffic circulation, to ensure that their business will still be able to function and the appropriate number of parking spaces needed for their facility will be retained at project completion. Businesses where permanent and detrimental impacts to parking areas are required were considered to be displacements and were included in the 11 displacements noted previously. Refer to **Table III-5** below for a summary of the 553 preliminary parking space impacts along the corridor.

Table III-5
Parking Space Impacts per Property

Parcel Number	Property/Business Name	Parking Spaces Impacted
P. 4900	PLUM CRAZY TWIN KISS	24
P. 508	CARROLL PLAZA	21
P. 164	WESTMINSTER SHOPPING CENTER	70
P. 2759	LEN STOLER CHEVY/OLDS/CADILLAC	70
P. 1519-1	KOONS MAZDA/TOYOTA	30
P.1519-2A	KOONS USED CARS	12
P. 938-6A	DUNKIN DONUTS / BASKIN ROBBINS	12
P. 2805	CROSSROAD SQAURE SHOPPING CENTER	77
P. 2806	LONGSTAR STEAK HOUSE	13
P. 590	SUNTRUST	12
P. 2671-2	RUBY TUESDAYS	19
P. 2671-3	BOB EVANS	18
P. 2666	HERITAGE HONDA	18
P. 2667	HERITAGE NISSAN/DODGE	11
P. 1494	OFFICE BUILDING	12
P.1563	SSA	10
P. 1861	MCDONALDS	14
P. 2743-1	CRANBERRY SQUARE SHOPPING CENTER	6
N/A	WACHOVIA	9
P. 2743-2	MERCHANTS TIRE AND AUTO	18
P. 4682-2	WESTMINSTER CROSSING SHOPPING CENTER	42
N/A	DENNY'S	14
P. 78	ROY ROGERS	14
P. 249	VOCELLI PIZZA	3
	CHURCH	4
TOTAL		**553**

b. SHA Equal Opportunity Program/Title VI Statement

It is the policy of the SHA to ensure compliance with the provisions of Title VI of the Civil Rights Act of 1964, and related civil rights laws and regulations which prohibit discrimination on the grounds of race, color, sex, national origin, age, or physical or mental handicap in all SHA projects funded in whole or in part by the Federal Highway Administration (FHWA). The SHA will not discriminate in highway planning, highway design, highway construction, right-of-way acquisitions, or provision of relocation advisory assistance. This policy has been incorporated in all levels of the highway planning process in order that proper consideration may be given to the social, economic, and environmental effects of all highway projects. Alleged discriminatory

actions should be addressed for investigation to the Equal Opportunity Section of the SHA, to the attention of Ms. Jennifer Jenkins, Director, Office of Equal Opportunity, 707 North Calvert Street, Baltimore Maryland 21202.

c. Environmental Justice

Potential low-income and minority populations were identified in compliance with Executive Order 12898, Federal Actions to Address the Environmental Justice in Minority and Low-Income Populations (EJ). Existing 1990 and 2000 Census demographic data, field research, and correspondence with local planning and social service organizations were used to determine the presence of low-income and minority populations within the study area. Additional efforts to identify EJ populations included consulting with Carroll County Department of Social Services, food banks, soup kitchens, shelters, and churches.

The average household income for the census area block groups within Westminster is $39,817. While lower than that of Carroll County ($60,021), it is higher than the Department of Health and Human Services' 2000 poverty guideline of $17,050 for a family of four. One census tract block group (507601), on the northwest portion of the project was close to meeting the low-income criteria for EJ communities. This small block group has an average median household income of $19,704 and includes an area behind the Crazy Plum Diner (**Figure 7**). Thus, it is likely that individual housing units in this area qualify as low-income. The poverty guideline for a family of four in 2006 is $20,000.

Approximately six percent of the study area population is part of a minority racial or ethnic group. This is slightly higher than the four percent minority composition of Carroll County. Persons of Hispanic ethnic origin comprise approximately one percent of the population in the study area and the County.

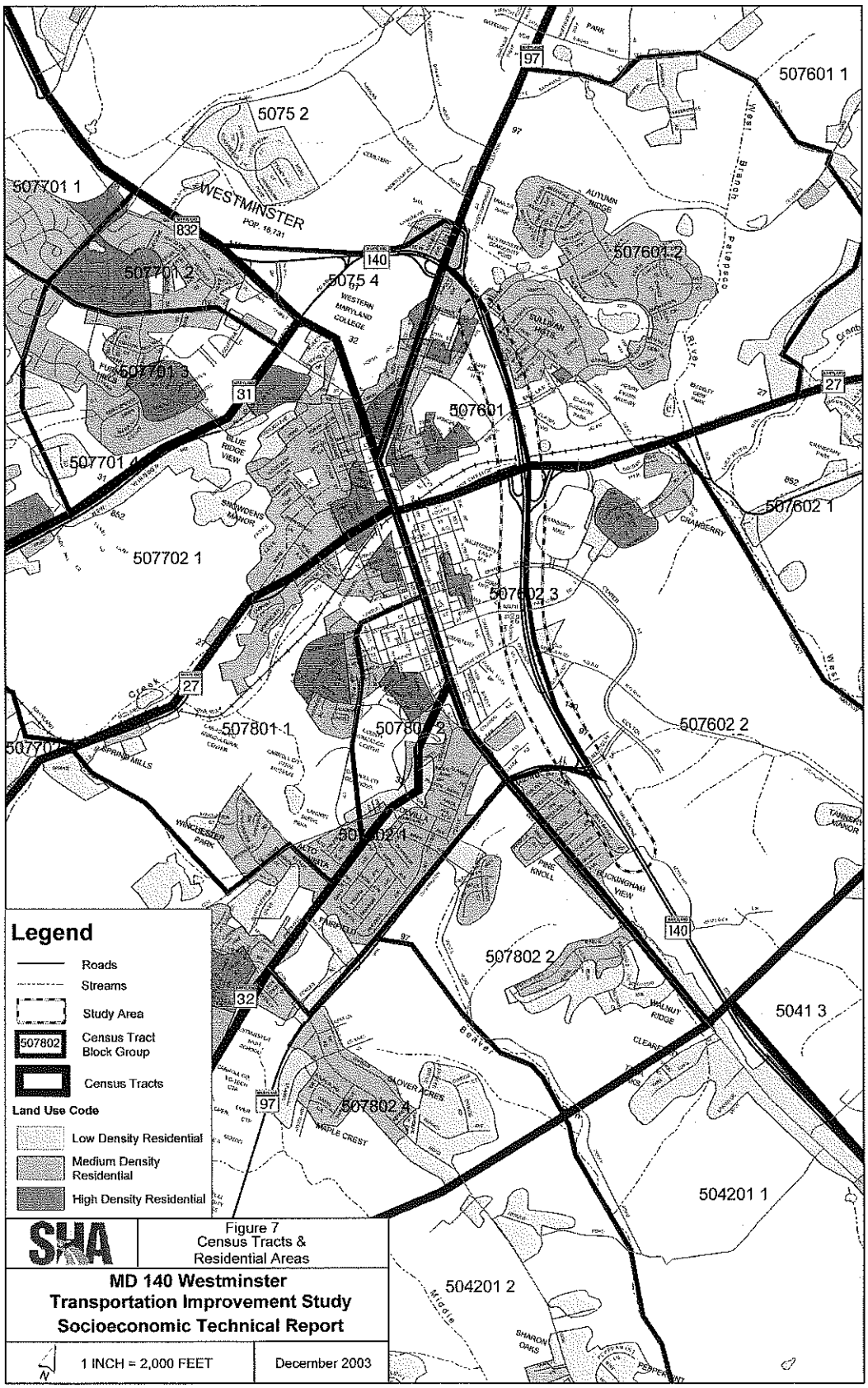
Legend
Roads
Streams
Study Area
507802
Census Tract Block Group
Census Tracts
Land Use Code
Low Density Residential
Medium Density Residential
High Density Residential
WESTMINSTER
POP. 18,731
5075 2
5075 4
507701 1
507701 2
507701 3
507701 4
507702 1
507601
507601 1
507601 2
507602 1
507602 2
507602 3
507801 1
507801 2
507802 1
507802 2
507802 4
5041 3
504201 1
504201 2
97
140
31
27
32
832
Figure 7
Census Tracts &
Residential Areas
MD 140 Westminster
Transportation Improvement Study
Socioeconomic Technical Report
1 INCH = 2,000 FEET
December 2003

An area on Sullivan Avenue behind the Plum Crazy Diner is within the area identified by the census tract 507601 block group 3 as having the largest minority population within the study area (16 %). This area is identified as being predominantly of Hispanic origin. Another area on Pennsylvania Avenue within the same census block was identified as predominantly of African America origin. These neighborhoods access the MD 140 Business District via connecting roadways, but would not be directly affected by any of the proposed impacts.

The SHA has encouraged public participation for the EJ populations through area-wide surveys, focus groups, and public workshops. Approximately 4,000 community outreach surveys were mailed and included the areas identified as potential EJ populations. Just over ten percent of the surveys were returned. Responses generally included suggestions for improved bicycle lanes or paths, transit and pedestrian facilities, as well as a variety of other issues. Representatives of the communities in the surrounding study area, including those with potential EJ populations, were notified of and invited to attend focus group meetings at various stages during the project. An Alternates Public Workshop was held March 4, 2003 and was attended by 90 people.

Community information was collected, and a translator was provided for any Spanish speaking attendees. However, SHA staff and consultants at the meeting indicated that they had not spoken to any attendees from areas where potential EJ populations were identified and had no requests for use of the translator.

The SHA Preferred Alternative includes additional sidewalks in the vicinity of the two identified EJ neighborhoods. The new sidewalks, improved pedestrian crossing, and 16-foot bicycle lane, under each of the build alternates, will give a broader range of safe and inexpensive transportation options to all individuals within the study area. Due to the lack of direct impacts to potential EJ communities and the lack of response to outreach efforts solicited throughout the project planning process, SHA believes that the SHA Preferred Alternative would not result in any disproportionately high and adverse effect on any minority and low-income populations under the purview of Executive Order 12898.

d. Neighborhoods, Community Facilities and Services

One of the goals of the MD 140 improvement study is to provide a safer, pedestrian-friendly roadway environment. The efficiency of travel time for residents in the communities and surrounding area will improve under the SHA Preferred Alternative. In addition to decreased traffic congestion, safety will be increased by removing conflict points with business access, and by improving through traffic conditions. Proposed improvements will also allow faster travel to regional services. There will be some potential adverse short-term effects to surrounding neighborhoods associated with lane and access closures during the construction phase of this project. A detailed maintenance of traffic plan will be developed during the final design phase for the project.

The SHA Preferred Alternative improvements will impact access to existing services and facilities along MD 140, especially during construction. Various business access points along MD 140 are consolidated or altered under this alternative. The SHA Preferred Alternative is expected to decrease travel time to facilities and services as well as response time of emergency vehicles to points within the project area. The area most directly affected by the proposed improvements to MD 140 is the MD 140 Business District. The proposed improvements would affect those who work and shop within the MD 140 Business District and use MD 140 as a throughway to their regional destinations.

e. Transportation Services

Transportation services in the project area, specifically, the Carroll Area Transit System (CATS), taxi, school bus, and bus shuttle services may be affected by the proposed improvements to MD 140 under the SHA Preferred Alternative. Routes or stop locations may change because of the addition of the interchanges at Malcolm Drive, Center Street, and Englar Road and the right-in/right-out access to Gorsuch Road, Cranberry Road, and Ralph Street.

Pedestrians and bicyclists would benefit under the SHA Preferred Alternative. Currently, pedestrian and bicycle access within the project area is unsafe because roadway travel lanes and

shoulders do not meet the current design standards to accommodate bicyclists, and limited sidewalks exist for pedestrian use. Sidewalks and additional lane widths for bicycles are incorporated into the design, thus improving safety and access for pedestrians and bicyclists.

f. Visual and Aesthetic Resources

The SHA Preferred Alternative will change the aesthetics and visual character of the project area through the addition of the five-foot sidewalks and improved pedestrian crossings, and a 16-foot expansion of outside lanes to accommodate bicyclists. Some businesses may no longer be as visible from mainline MD 140 as a result of the interchange at Malcolm Drive. The majority of the businesses are used frequently and are well known by the local communities. Although it is possible that the visual obstruction may cause an impact to some businesses by hindering visibility from non-local travelers, it is anticipated that local residents will continue to use these businesses because they are already accustomed to and familiar with their locations. Efforts will be made to aid these businesses who are currently visually obstructed; potentially through the use of signage.

g. Economic Environment

It is anticipated that Combination Option 4 would have both positive and negative effects on local and countywide economic activity. As previously stated, under this alternative, the right-of-way impacts will require 11 business displacements. Those businesses that are not displaced will be impacted by linear right-of-way acquisition from their properties and will also be temporarily impacted due to construction activities. Efforts will be made to work with the property owners to provide a similar visible relocation in the study area for those properties which will become displaced along the corridor. These short-term impacts will cause an inconvenience to both consumers and business owners. However, every effort will be made so that no business will have its operations impaired at any time. The proposed improvements to the intersections and traffic movements will create a safer, less congested roadway. This improved roadway will be ultimately beneficial to businesses, as their customers will spend less time in traffic.

The increased efficiency of the traffic movement within the MD 140 project area will reduce travel time and increase the mobility of local traffic, and also make the delivery of goods and services that these businesses offer more efficient. As a result this could draw new employers and employees to the area. While there may be a short-term loss of tax base caused by business and property impacts, the SHA Preferred Alternative will improve the long-term tax base of the project area by encouraging the operation and development of businesses. Property values in the area will also increase because of the reduction in traffic congestion and improvements in safety.

The tax base in the project area relies heavily on commercial activity. The majority of the revenue for the tax base is generated through sales and use tax accounts from commercial properties. Commercial property tax also contributes to the project area tax base. Almost all available space within the project area is commercially developed. However, there are several unoccupied parcels fronting MD 140 (some with existing structures) where displaced businesses could potentially relocate. The revenue generated through income taxes is relatively small because of the limited number of residences in the project area, and will not be affected.

As a result of the required business displacements it is expected that there will be an initial decrease in the tax base for this area. However, due to improved traffic movement, it is anticipated that the MD 140 Business District will eventually benefit from increased consumer patronage. It is also anticipated that the displaced businesses will be able to relocate within the project area.

h. Land Use

The proposed improvements to MD 140 are consistent with the Westminster and Environs Comprehensive Plan (1985). Phasing and coordinating the timing of signals, applying high standards for design and access arrangements for new uses, and improved pedestrian and bicycle traffic are specific issues discussed in the Comprehensive Plan that are incorporated into the overall appearance and function of MD 140.

The MD 140 project area is planned for residential, commercial, and industrial land uses according to the 1985 Comprehensive Plan. This MD 140 Transportation Improvements Project is included in the plan as a recommended action in order to facilitate the community's transportation goals.

i. Cultural Resources

A historic structures survey determined that there are no sites within the project area that are on or eligible for listing on the National Register of Historic Places. No previously recorded archeological resources were identified. Extensive ground disturbance due to commercial and residential development has significantly reduced the project area's archeological potential, and therefore no additional archeological investigations are anticipated.

Therefore, since no historic resources are present within the project area, under the purview of Section 106 of the National Historic Preservation Act, the Maryland Historical Trust (MHT) concurred (on August 20, 2003 and on November 13, 2006; **Appendix A**) that no historic properties will be affected by the proposed widening and interchange improvements. Although this determination was made prior to the development of the SHA Preferred Alternative, the Area of Potential Effect remains the same.

2. Natural Resources

a. Effects on Water Resources

Due to the limited resources in the project area and urban development, impacts to water resources are minor. Approximately 192 linear feet of stream will be impacted under the SHA Preferred Alternative. These impacts occur to the perennial stream, Longwell Branch, and its intermittent tributaries. Impacts occur largely to the waters immediately adjacent to the roadway and are associated with culverts. These stream impacts are located at the northwest corner of Sullivan Road and MD 140, shown on **Figure 3** as Wetland W-5 and W-5A; and at Center Street, shown on **Figure 4** as Wetlands W-3 and W-4. The minor wetland impacts are located at

the northwest corner of Market Street and MD 140, shown on **Figure 6** as Wetland W-1. It is not anticipated that any streams will need to be relocated, and mitigation will be coordinated with Federal and State regulatory agencies during the design phase of the project.

In addition to direct impacts, there is the potential to indirectly affect surface waters and groundwater due to stormwater runoff. During construction, contractors will be required to adhere to provisions in SHA's standards and specifications. The conversion of open-space and forested areas to impervious areas would be expected to increase surface water runoff and peak storm flows, as well as introduce sediment and other pollutants into waterways. Of the 95 properties from which right-of-way is required, 19 are currently open space and/or forest. Varying amounts of land from these properties will be converted to impervious surface. Total impervious surface areas will be determined during final design. Five of these 19 properties are identified as potential locations for stormwater management (SWM). The greatest potential negative effect from soil disturbance is sedimentation to downstream receiving waters. With the exception of Glenelg loam, Glenville sandy loam, and Hatboro silt loam, all of the soils in the project area are designated by the Natural Resource Conservation Service (NRCS) as highly erodible or potentially highly erodible. When exposed during construction, these soils have a high potential susceptibility to the erosive forces of wind and rain if not carefully managed.

The SHA Preferred Alternative would result in less than a quarter of an acre of wetland impacts, largely to Wetland W-1, the system located at the southern end of the project area. Engineering practices such as the use of retaining walls were examined at this location in order to minimize wetland impacts. Based on the assessment of wetland impacts, it has been determined in accordance with Executive Order 11990, Protection of Wetlands, that there is no practicable alternative to the proposed wetland impacts and that the proposed action includes all practicable measures to minimize harm to wetlands which may result from such use.

b. Effects on Habitat

Construction of the SHA Preferred Alternative would result in the removal of vegetation within the project area. A total of 3.4 acres of impacts is estimated to wooded areas, largely to the forest edge communities located along MD 140 and in between properties.

Only a few larger wooded patches are located within the project area, and are mostly comprised of early successional species. The SHA Preferred Alternative has largely avoided these larger wooded areas. Any wooded area impacted by the SHA Preferred Alternative is isolated from other natural habitats by existing development. No specimen trees will be impacted by the SHA Preferred Alternative.

Roadway construction can often cause short-term impacts to fisheries resources, such as sedimentation, which has the potential to degrade water quality. As previously described, the DNR advises that no work is permitted in Use IV streams (Recreational Trout and Public Water Supply Protection Waters) from March 1 through May 31, inclusive during any year. This prohibition should be adequate to protect the resident species in the area and the trout stocked for put-and-take fishing.

3. Hazardous Waste

The SHA Preferred Alternative would require acquisition of right-of-way from several properties that contain documented potentially hazardous substances. Of the 70 sites identified by the FirstSearch report, the USEPA ENVIROFACTS results, and the field survey; approximately 32 sites have the potential to be affected by right-of-way acquired for the SHA Preferred Alternative. Because the limits of construction are preliminary, other properties may also have the potential to be affected by the project depending on the final design.

Of the 11 properties that will be displaced for the SHA Preferred Alternative, six of these properties were identified as potentially containing hazardous substances. Four of these sites are gas stations and one is an auto repair shop, all of which would require further research and

investigation prior to acquisition in order to determine the exact locations of above ground and underground storage tanks used for fuel and waste oil storage, and to determine the presence of soil or groundwater contamination. The last displaced site that was identified in the FirstSearch report is the Popeye's Restaurant located at the corner of MD 140 and Malcolm Drive. This site is listed as having had a leaking underground storage tank; however the case is closed and no further action is recommended for this site at this time.

4. Air Quality and Noise Impacts

The MD 140 study area is located within Carroll County which is part of the Baltimore Metropolitan Council Region (BMC) that contains Baltimore City, Baltimore County, Anne Arundel County and Howard County. This region is designated as attainment for the following pollutants: carbon monoxide (CO), nitrogen dioxide (NO2), sulfur dioxide (SO2), lead (Pb), and particulate matter (PM10). Based on the findings of the air quality analysis, improvements to MD 140 meet the Transportation Conformity requirements of the Federal CAA. The dispersion modeling results using CAL3QHC indicate that the CO levels in the vicinity of the MD 140/ MD 97 (Malcolm Drive) intersection and along the mainline will not exceed the Statewide/National Ambient Air Quality Standards (S/NAAQS) of 35 parts per million (ppm) for the one-hour concentration of CO or nine ppm for the eight-hour concentration of CO.

This project is located in the BMC which is a $PM_{2.5}$ non-attainment area. The area was designated as non-attainment for $PM_{2.5}$ on January 5, 2005 by the US Environmental Protection Agency. This designation became effective on April 5, 2005, 90 days after EPA's published action in the Federal Register. Transportation conformity for the $PM_{2.5}$ standards applied on April 5, 2006, after the one-year grace period provided by the Clean Air Act. The MD 140 Transportation Improvement Study Air Quality Analysis was completed prior to this effective date in June 2004; therefore, a project level $PM_{2.5}$ conformity determination is now required.

Based on review and analysis, it is determined that the MD 140 project meets the Clean Air Act and 40 CFR 93.109 requirements. These requirements are met for fine particulate matter without a project-level hot-spot analysis, since the project **has not been found to be a project of air quality concern** as defined under 40 CFR 93.123(b)(1). Since the project meets the Clean Air

Act and 40 CFR 93.109 requirements, the project will not cause or contribute to a new violation of the $PM_{2.5}$ NAAQS, or increase the frequency or severity of a violation for the following reasons:

- The MD 140 project does not meet the criteria set forth in 40 CFR 93.123(b)(1) as amended to be considered a *project of air quality concern* primarily because the project is an expansion of an existing highway primarily used by gasoline vehicles to relieve congestion. The project will not build additional through lanes to increase capacity.
- The MD 140 project, which has a maximum design year (2025) annual average daily traffic (AADT) of 78,300, is proposed to have the same AADT for both No Build and Build conditions.
- The MD 140 Project does not have a significant increase in diesel vehicles due to construction of the project. In accordance with FHWA guidance, "40 CFR 93.123(b)(1)(i) should be interpreted as applying only to projects that would involve a significant increase in the number of diesel transit busses and diesel trucks on the facility". Based on a memorandum from SHA dated September 10, 2003, the percent of truck traffic (7.05%) is not expected to change between the Build and No Build conditions.
- The MD 140 Project also does not meet the criteria set forth in 40 CFR 93.123(b)(1)(ii), as amended, to be considered a *project of air quality concern* because it affects intersections that will not "change to Level-Of-Service D, E or F because of increased traffic volumes from a significant increase in number of diesel vehicles related to the project." The MD 140 project will improve the operation of affected intersections.
- The primary east-west truck route in the area is I-70, which is located to the south of MD 140, and is readily accessible from the study area via MD 32 and MD 97.
- Section 176(c) of the Clean Air Act and the federal conformity rule requires that transportation plans and programs conform to the intent of the state air quality implementation plan (SIP) through a regional emissions analysis in $PM_{2.5}$ non-

attainment areas. The MD140 project is located in the Baltimore, MD $PM_{2.5}$ non-attainment area and is under the jurisdiction of the Baltimore Regional Transportation Board (BRTP). The Baltimore Regional Transportation Board is the federally recognized Metropolitan Planning Organization (MPO) for transportation planning in the Baltimore region. Members of the Baltimore Metropolitan Council (BMC) Board serve on the BRTP, and the BMC provides technical and staff support to the BRTP. The 2004 Baltimore Regional Transportation Plan and the FY 2007-2011 Transportation Improvement Program have been determined to conform to the intent of the SIP[1]. The US Department of Transportation made a Conformity Determination on the CLRP and the TIP on November 8, 2006, and thus there is a currently conforming transportation plan and TIP in accordance with 40 CFR 93.114. The current conformity determination is consistent with the final conformity rule found in 40 CFR Parts 51 and 93. The MD 140 project was included in the regional emissions analysis and there have been no significant changes in the project's design concept or scope, as used in the conformity analyses. Therefore, this project comes from a conforming plan and program in accordance with 40 CFR 93.115. Conformity to the purpose of the SIP means that the transportation activity will not cause new air quality violations, worsen existing violations, or delay timely attainment of the relevant national ambient air quality standards (NAAQS or "standards").

- By email dated January 17, 2007 the above analysis was approved by FHWA and forwarded to EPA, MDE and BRTB for Interagency Consultation. On January 22, 2007 email approvals were received from EPA and MDE. On January 24, 2007, response was received from BRTP with comments that have been addressed in this Conformity Determination and BRTP approval received. FHWA, EPA MDE and BRTP agreed that the MD140 Project is **not a project of air quality concern** as defined in 40 CFR 93.123(b)(1), and therefore, a project level hot-spot analysis is not required. As no other comments were received from Interagency Consultation, this Public Notice was placed on SHA's website for a 15 day pubic review and comment period on January 30, 2007. No comments were received.

[1] Conformity Determination of the 2004 Baltimore Regional Transportation Plan and the FY 2007-2011 Transportation Improvement Program, Baltimore Regional Transportation Board (BRTB), August 2006.

FHWA Guidance on Air Toxic Analysis in NEPA Documents[2] requires analysis of Mobile Source Air Toxics (MSAT) under specific conditions. The EPA has designated six prioritized MSATs, which are known or probable carcinogens or can cause chronic respiratory effects. The six prioritized MSATs are: Benzene; Acrolein; Formaldehyde; 1,3-Butadiene, Acetaldehyde; and Diesel Exhaust (Diesel Exhaust Gases and Diesel Particulate Matter). Per SHA traffic analysis the Build traffic volumes (ADT) and truck percentages are equal to the No-build traffic volumes (ADT) and truck percentages. Also, traffic volumes are less than 140,000 AADT. Therefore this would be a *"minor widening project[s] and new interchange[s, such as those] that replace(s) a signalized intersection on a surface street"..."that serves to improve operations of highway...without adding substantial new capacity or creating a facility that is likely to meaningfully increase emissions"*[3]. Therefore the MD 140 project would be considered a **Project with Low Potential MSAT Effects**.

Because SHA traffic analysis demonstrates that the Build traffic volumes (ADT) and truck percentages are equal to the No-build traffic volumes (ADT), the MD 140 Project will not result in any meaningful changes in traffic volumes, vehicle mix, or any other factor that would cause an increase in emissions impacts. As such, FHWA has determined that this project will generate minimal air quality impacts for the Clean Air Act criteria pollutants and has not been linked with any special MSAT concerns. However, since the previously prepared environmental studies for the MD 140 Project did not include a discussion of MSAT, a qualitative MSAT analysis is necessary.

Included herein is a basic analysis of the likely MSAT emission impacts of this project. However, available technical tools do not enable us to predict the project-specific health impacts of the emission changes associated with the Build Alternative. Due to these limitations, the following discussion is included in accordance with CEQ regulations (40 CFR 1502.22(b)) regarding incomplete or unavailable information: evaluating the environmental and health impacts from MSATs on a proposed highway project would involve several key elements,

[2] Interim Guidance on Air Toxic Analysis in NEPA Documents
[3] ibid

including emissions modeling, dispersion modeling in order to estimate ambient concentrations resulting from the estimated emissions, exposure modeling in order to estimate human exposure to the estimated concentrations, and then final determination of health impacts based on the estimated exposure. Each of these steps is encumbered by technical shortcomings or uncertain science that prevents a more complete determination of the MSAT health impacts of this project.

The EPA tools to estimate MSAT emissions from motor vehicles are not sensitive to key variables determining emissions of MSATs in the context of highway projects. The tools to predict how MSATs disperse are also limited. Even if emission levels and concentrations of MSATs could be accurately predicted, shortcomings in current techniques for exposure assessment and risk analysis preclude reaching meaningful conclusions about project-specific health impacts. Research into the health impacts of MSATs is ongoing. For different emission types, there are a variety of studies that show that some either are statistically associated with adverse health outcomes through epidemiological studies (frequently based on emissions levels found in occupational settings) or that animals demonstrate adverse health outcomes when exposed to large doses. The EPA is in the process of assessing the risks of various kinds of exposures to these pollutants.

As discussed above, technical shortcomings of emissions and dispersion models and uncertain science with respect to health effects prevent meaningful or reliable estimates of MSAT emissions and effects of this project. However, even though reliable methods do not exist to accurately estimate the health impacts of MSATs at the project level, it is possible to qualitatively assess the levels of future MSAT emissions under the project. Although a qualitative analysis cannot identify and measure health impacts from MSATs, it can give a basis for identifying and comparing the potential differences among MSAT emissions-if any-from the Build Alternative.

For each Alternative (No-build and Build), the amount of MSATs emitted would be proportional to the annual average daily traffic (AADT), or vehicle miles traveled (VMT). Although the Build traffic volumes (ADT) and truck percentages are equal to the No-build traffic volumes (ADT) and truck percentages, the Vehicle Miles Traveled (VMT) within the study area estimated

for the Build Alternative may be slightly greater than that of the No-build, because the Build Alternative will reduce congestion and increase efficiency of the roadway, and may attract additional trips from elsewhere in the transportation network. This slight increase in VMT may lead to slightly higher MSAT emissions along MD 140 corridor for the Build Alternative. The emissions increase due to increased VMT is offset somewhat by lower MSAT emission rates due to increased speeds, since according to EPA's MOBILE6.2 emissions model, emissions of all of the priority MSATs, except for diesel particulate matter, decrease as speed increases. The extent to which these speed-related emissions decreases will offset VMT-related emissions increases cannot be reliably projected due to the inherent deficiencies of technical models.

The additional lanes and interchange ramps of the Build Alternative will have the effect of moving some traffic closer to nearby homes and businesses; therefore, there may be localized areas where ambient concentrations of MSATs could be higher under the Build Alternative than the No-build Alternative. The localized increases in MSAT concentrations would likely be most pronounced along the side where the roadways shift towards the residences and businesses. However, as discussed above, the magnitude and the duration of these potential increases compared to the No-build alternative cannot be accurately quantified due to the inherent deficiencies of current models.

In summary, when a highway is widened and, as a result, moves closer to receptors, the localized level of MSAT emissions for the Build Alternative could be higher relative to the No Build Alternative, but this could be offset due to increases in speeds and reductions in congestion (which are associated with lower MSAT emissions). Also, MSATs will be lower in other locations when traffic shifts away from them. Furthermore, at both the project location and regionally, MSAT concentrations will decease in future years due to EPA's vehicle emission and fuel regulations. It has shown as a result of EPA's national emissions control programs that MSAT emissions are projected to be reduced by 57 to 87 percent between 2000 and 2020. Local conditions may differ from these national projections in terms of fleet mix and turnover, VMT growth rates, and local control measures. However, the magnitude of the EPA-projected reductions is so great (even after accounting for VMT growth) that MSAT emissions in the study area are likely to be lower in the future in nearly all cases. Refer to **Figure 8**, below.

Figure 8

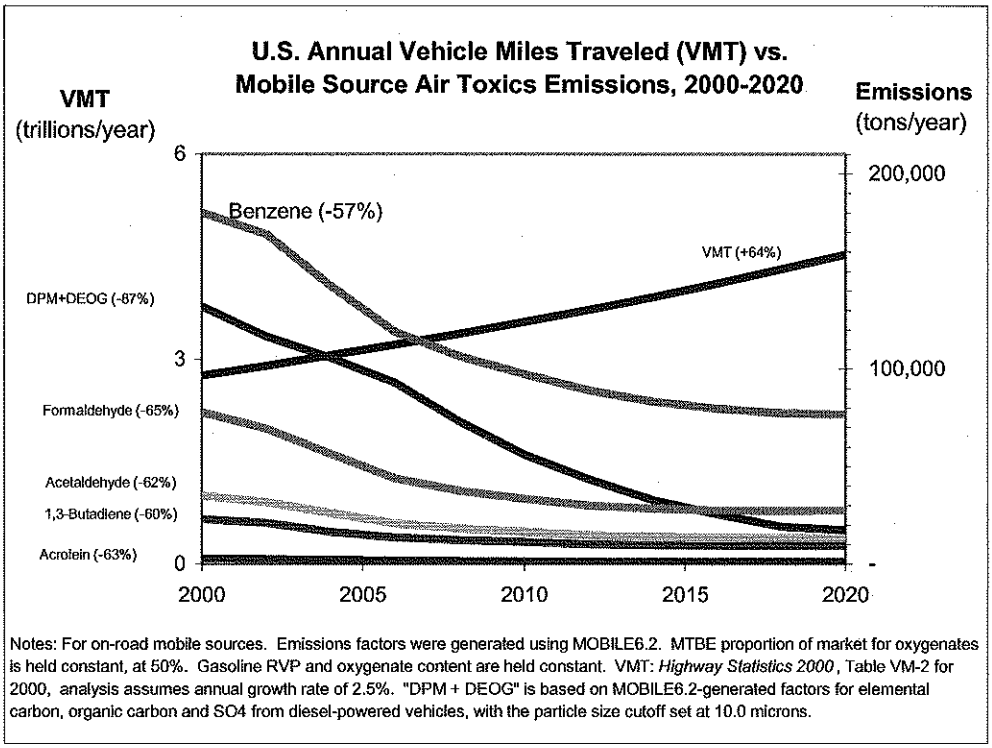

Notes: For on-road mobile sources. Emissions factors were generated using MOBILE6.2. MTBE proportion of market for oxygenates is held constant, at 50%. Gasoline RVP and oxygenate content are held constant. VMT: *Highway Statistics 2000*, Table VM-2 for 2000, analysis assumes annual growth rate of 2.5%. "DPM + DEOG" is based on MOBILE6.2-generated factors for elemental carbon, organic carbon and SO4 from diesel-powered vehicles, with the particle size cutoff set at 10.0 microns.

MD 140 is currently included in the FY 2002-2006 Transportation Improvement Program (TIP) and the 2001 Baltimore Regional Transportation Plan (BRTP), which are both consistent with the State Implementation Plan (SIP). Alternative 2, the TSM/TDM alternative proposed for MD 140, includes the elements listed under Conformity for the 2004–2008 TIP. Refer to the MD 140 Air Quality Technical Reports for additional information. The Authority is coordinating and will continue to coordinate with BRTB to ensure that the MD 140 Project is included in the air quality modeling for the next update to the region's long range plan and transportation improvement program.

Six Noise Sensitive Areas (NSAs) were used to describe the noise environment in the study area (see **Figures 3 through 5).** Results of the noise analysis identified two NSAs that warranted further evaluation of potential noise abatement measures: NSA 3 (east and west), and NSA 6. NSA 3 (east and west) represents the Sullivan Heights community as divided by Monterey Drive. NSA 6 represents two residences west of MD 140 and Gorsuch Road.

The remaining NSAs (NSA 1, 2, 4 and 5) either were not impacted or did not meet the reasonableness and feasibility criteria found in the SHA Noise Policy (**Table III-6**). NSAs 2 and 4 were not impacted as they were not projected to experience design year (2025) build noise levels 66 decibels (dBA) or greater, and/or are not projected to increase at least 10 dBA and over 57 dBA, or increase to 72 dBA or greater. NSA 1 is impacted, with projected design year noise levels of 66 dBA. However, the noise abatement cost ($103,040/benefited residence) exceeds both the $50,000 per benefited residence criteria and the $100,000 per benefited residence cost averaging maximum, and is not considered reasonable. NSA 5 is also impacted, with design year noise levels exceeding 66 dBA, but maintaining driveway access for four properties with direct access onto MD 140 prevents an effective noise barrier from being constructed.

Table III-6
Noise Analysis Summary

Receptor	Ambient Noise (dBA)	2025 No-Build Noise	2025 Build	Noise Increase (dBA)	Receptor	Ambient Noise (dBA)	2025 No-Build Noise	2025 Build	Noise Increase (dBA)
NSA 1					**NSA 4**				
R-02	63	63	66	3	R-01	56	56	59	3
1-1	58	58	60	2	4-1	57	57	60	3
1-2	60	60	62	2	4-2	62	62	65	3
1-3	63	63	63	0	**NSA 5**				
1-4	65	65	66	1	R-07	70	70	70	0
1-5	59	59	60	1	R-08	65	65	66	1
NSA 2					5-1	67	67	69	2
R-04	57	57	59	2	5-2	69	69	70	1
					5-3	65	65	65	0
					5-4	60	60	61	1

Receptor	Ambient Noise (dBA)	2025 No-Build Noise	2025 Build	Noise Increase (dBA)	Receptor	Ambient Noise (dBA)	2025 No-Build Noise	2025 Build	Noise Increase (dBA)
NSA 3	**east**				**NSA 3**	**west**			
R-05	69	69	72	3	C-1	65	65	66	1
3-6	66	66	67	1	3-1	67	67	68	1
3-7	62	62	62	0	3-2	58	58	60	2
					C-6	65	65	70	5
NSA 6					R-03	52	52	53	1
R-06	72	72	73	1	C-3	64	64	68	4
6-1	61	61	63	2	3-4	62	62	63	1
					3-5	66	66	68	2

Notes: A noise analysis was performed for each of the proposed ARDS; Table III-6 shows results for Alternative 7. The shaded areas of Table III-6 show impacted receptors and significant noise increases.

NSA 3 (east and west) is impacted (**Table III-6**) and an effective barrier can be constructed on either side of Monterey Drive although it would be located within 20 feet of the homes on NSA 3 west. The NSA 3 combined barrier would be 1,401 feet long, 11-12 feet tall, and cost $36,631 per benefited residence. The NSA 6 barrier would be 360 feet long, 12 feet tall, and cost $79,490 per benefited residence. NSA 6 qualifies for a barrier under cost averaging with NSA 3 as it is below the $100,000 criteria and the average cost for noise abatement for NSAs 3 and 6 is $41,393 per benefited residence. Final decisions on the implementation of noise abatement measures for these NSAs will be made during the design phase of the project.

Although highway construction is a short-term phenomenon, it can cause adverse noise impacts. Additionally, it is likely that some construction may need to occur at night to avoid adverse effects on traffic operations. The extent and severity of the noise impact would depend upon the phase of construction and the noise characteristics of the construction equipment in use. Construction would have direct impact on receptors close to the construction site and an indirect impact on receptors near roadways whose traffic flow characteristics are altered due to rerouting from the construction site. As with any major construction project, areas around the construction site are likely to experience varied periods and degrees of noise impact. This type of project would probably employ the following sources of construction noise:

- Bulldozers
- Graders
- Front End Loaders
- Dump Trucks and other Diesel Trucks
- Pavers

Maintenance of construction equipment will be regular and thorough to minimize noise emissions resulting from inefficiently tuned engines, poorly lubricated moving parts, and poor to ineffective muffling/exhaust systems.

5. Secondary and Cumulative Effects Analysis (SCEA)

The SHA Preferred Alternative would result in minor direct impacts to natural and socio-economic resources. There are no development projects dependent on the proposed improvements to MD 140 and the SHA Preferred Alternative would not provide new or improved access to any undeveloped properties, therefore no secondary effects to SCEA resources would result from the MD 140 improvements. It is anticipated that development will reach its zoning capacity regardless of the MD 140 improvements, although the proposed improvements may somewhat increase the rate of development.

The contribution of this project to cumulative impacts on study area resources is considered to be minor. Open space and agricultural land uses located within the surrounding SCEA study area may see increased pressure from growth. It is anticipated that as development continues and areas zoned for development reach their anticipated capacity, there will be greater demands placed on agricultural land for non-farm development. Although impacts to natural resources such as streams, wetlands, and forests are likely to occur in conjunction with possible future development, these impacts will be offset by existing environmental laws that require project specific mitigation to offset these impacts. Impacts to wetlands, for example, will be minimized by the existence of resource conservation zoning surrounding the majority of these streams, and through Federal and State programs to regulate and protect wetlands and waterways. Forests will be protected through the Maryland DNR's Reforestation Law and Forest Conservation Act.

E. MITIGATION

1. Socioeconomic Environment

Relocation of displaced businesses would be accomplished in accordance with the requirements of the Uniform Relocation and Real Property Acquisitions Policies Act of 1970 as amended by Title IV of the Surface Transportation Policies Act of 1987, revised June 10, 2005, and would be executed in a timely and satisfactory manner. Assurance is given that relocation resources would be available to all displacees without discrimination.

2. Natural Resources

Roadway construction often causes short-term impacts to the surrounding natural resources. Impacts from soil erosion will be minimized through implementation of an approved Erosion and Sediment Control plan in accordance with the *Maryland Standards and Specifications for Soil Erosion and Sediment Control.* Measures to control erosion would include reduction of soil exposure time, vegetative stabilization of exposed soils, and use of standard structural controls such as super silt fences and appropriately sized sediment traps and basins. A stormwater management plan would be developed in accordance with MDE stormwater criteria to minimize adverse effects to water resources.

Implementation of Best Management Practices (BMP), including stormwater management ponds, biofiltration systems, and sediment/erosion control measures, during and after construction will reduce the amount of contaminants entering groundwater supplies and maximize groundwater recharge. Under requirements of Section 404 of the Clean Water Act and the Maryland Nontidal Wetlands Protection Act, a Joint Federal/State permit may be required for any impacts to nontidal wetlands resulting from the project. In accordance with Federal and State regulations, efforts to avoid and minimize impacts to wetlands and other waters of the U.S. are on-going and would continue during final design.

Under requirements of the Maryland Reforestation Law, all forest lands cut or cleared equaling one or more acres will be replaced at a 1:1 ratio. Forest replacement must be completed within one or two growing seasons after the project has been completed. Locations for forest mitigation would also be established and approved during final design. Impacts to terrestrial and aquatic wildlife can be diminished through the use of tree protection measures for areas not to be cleared during construction, limiting clearing where possible during the breeding season of most terrestrial vertebrates (May-August), and strict adherence to stream closure periods, stormwater management guidelines, and sediment and erosion control plans. Best Management Practices including features such as super silt fences and appropriately sized sediment traps and basins would also be utilized to help reduce the sedimentation from roadway construction.

3. Hazardous Waste

Due to the highly urbanized and commercial nature of the MD 140 corridor, the potential for hazardous waste within the study area is heightened. Coordination with MDE will be initiated prior to any project construction, as well as additional site reconnaissance in order to document any potential changes at the known or suspected sites with environmental concerns. If contaminated sites are found prior to construction, all contaminated soil and groundwater remediation will be completed in compliance with all applicable federal and state hazardous material regulations.

Section IV
Summary of Public Involvement

SECTION IV SUMMARY OF PUBLIC INVOLVEMENT

A. AREA-WIDE SURVEYS, FOCUS GROUPS, AND PUBLIC WORKSHOPS

This section summarizes the major public involvement activities and outcomes. It reflects the concerns and positions taken, in general, by both the City and County level governments as well as the citizens.

The SHA has encouraged public participation and outreach for the MD 140 Transportation Improvements Study through the use of area-wide surveys, focus group meetings, special interest group presentation, elected official meetings, Alternates Public Workshop and the Location/Design Public Hearing. Representatives of the residential, church, and business communities surrounding the project area were invited to attend focus group meetings at various stages during the project. Several individual meetings were also held with the businesses directly affected by the SHA Preferred Alternative. Additionally, an Alternates Public Workshop and a Public Hearing were conducted as part of the MD 140 NEPA process for the project.

Outreach to the existing EJ populations included bulk mailing of surveys to identify issues of importance to the residents and a community table at the Public Workshop with a Spanish translator in attendance.

Top concerns resulting from mailed surveys included traffic congestion, traffic safety, speeding, landscaping, and roadway/sidewalk appearance. A Focus Group was developed to act as a sounding board for the study team involved in the MD 140 Project Planning Study. This Focus Group included local business representatives and concerned citizens, and was directed to give feedback to the study team in regards to the needs and concerns of the community at large.

The first Focus Group meeting, held in April 2002, had concerns expressing the following:

- Loss of business visibility from MD 140 under certain build alternatives
- Funding and impacts to community
- Emergency vehicle access to MD 140
- Construction time and loss of business access

Many of the key issues generated by the Focus Group largely mirrored concerns that were expressed by the community in the survey. The MD 140 study team worked to ensure that these concerns were, and will continue to be, addressed. In regards to property owner's rights and business access concerns, the SHA Office of Real Estate will work with all affected property owners. In addition, the SHA study team offered to meet with all of the residential and business owners who would be impacted by the SHA Preferred Alternative in an effort to minimize impacts throughout the corridor. Several meetings were held with individual businesses identified as impacted by part of the SHA Preferred Alternative.

The Alternates Public Workshop, held on March 4, 2003 was attended by approximately 90 people. The workshop was intended to allow for open communication between the local community and the study team about the build alternatives. The workshop presented the preliminary alternatives to date, and co mmunity member comments and concerns were noted.

Surveys taken during the meeting showed that attendees were concerned about the character change they perceived would result from incorporating interchanges into Westminster. Further, the survey results expressed that the original concept of a Westminster Bypass would be the most preferred option. When asked which alternative they support, five individuals supported the No-Build Alternative, two supported Alternative 4, and one vote was received for Alternatives 5 and 6. Other concerns at the public workshop included the following:

- Certain alternatives would increase vehicle speeds and make driving conditions less safe
- Loss of private and commercial property under all build alternatives
- No need for bicycle and pedestrian lanes, MD 140 is too dangerous
- Alternatives would not eliminate congestion but will only act to move the traffic bottlenecks east and west of the project area

B. SUMMARY OF PUBLIC HEARING

The MD 140 Location/Design Public Hearing was held Tuesday, October 26, 2004 to present the Alternates Retained for Detailed Study and the findings documented in the Environmental Assessment. Approximately 140 people attended the Public Hearing, 16 people testified and nine comment cards were received. Those who attended confirmed many of the important issues raised at the Alternates Public Workshop. The majority of the support was given to Alternative 2 (TSM/TDM) in addition to the need to study the Westminster Bypass. Also, a joint recommendation was proposed by the Mayor of Westminster and the Carroll County government for Alternative 2 along with the SPUI from Alternative 5 at Malcolm Drive.

C. CONTINUED COORDINATION

Following the Location/Design Public Hearing, a series of combination options were developed by the study team based on the input from the hearing and comments received. Given the community concerns about grade separations on MD 140 and the need for operational improvements, the team identified the CFI options at Englar Road and Center Street, along with the SPUI at Malcolm Drive, as offering the best solution for the corridor. However, due to the limited experience with the CFI design, and the potential public confusion of this concept, additional meetings were held with the Carroll County Commissioners and the Mayor and Town Council for Westminster on October 25, 2005 and February 22, 2006. There was some initial concern from the elected officials regarding the CFI options. However, based on the additional information presented and the travel time savings predicted for the CFI concepts, consensus was reached on the SHA Preferred Alternative, Combination Option 4 with Gorsuch Road Option B. Outreach efforts will continue throughout the design phase to help educate the driving public concerning use of the CFI design.

In summary, as a result of the Focus Group, Alternates Public Workshop, surveys, and the Public Hearing, concerns of the local business owners and other interested citizens have been incorporated in the design of the SHA Preferred Alternative proposed for the corridor. As previously stated, the Maryland SHA will work with any displaced persons on relocation efforts

in accordance with the Uniform Relocation Assistance Act of 1970, as amended. Additionally, the SHA Preferred Alternative has been designed to provide safe conditions for both motorists and pedestrians, with the construction of a separate sidewalk and on-road bicyclist facilities. Emergency vehicles will also be able to safely and effectively traverse this corridor. Ongoing community and public involvement efforts will be used to ensure that the needs identified by the community are met to the greatest extent possible.

Appendix A
Correspondence and Comments

Agency Correspondence

Agency Coordination

The MD 140 Transportation Improvement Study was removed from the Maryland Streamlined Environmental and Regulatory Process after the July 2003 Interagency Review presentation of the Alternates Retained for Detailed Study (ARDS). The decision was agreed upon by the environmental and regulatory agencies due to the minor environmental impacts associated with the ARDS.

On July 21, 2004, SHA made a courtesy presentation at an Interagency Review Meeting to the regulatory agencies. The purpose of the presentation was to present the continuous flow intersection concepts in greater detail and to familiarize the agencies with the ARDS prior to issuance of the Environmental Assessment. Information concerning the alternates and the impacts associated with each were provided.

The SHA Selected Alternate was again presented to the regulatory agencies at the May 17, 2006 Interagency Review Meeting. The SHA Selected Alternate and associated impacts to natural and socio-economic resources was presented. No concerns were expressed by the agencies regarding the SHA Selected Alternate.

Robert L. Ehrlich, Jr.
Governor

Michael S. Steele
Lt. Governor

Maryland Department of Natural Resources
Environmental Review
Tawes State Office Building
580 Taylor Avenue
Annapolis, Maryland 21401

C. Ronald Franks
Secretary

W. P. Jensen
Deputy Secretary

November 30, 2004

Ms. Cynthia Simpson
State Highway Administration
Mailstop C-301
707 North Calvert Street
Baltimore, Maryland 21202

Dear Ms. Simpson:

This letter is in response to your October 6, 2004 request for review of the Environmental Assessment document for the MD 140 Transportation Improvement Study (Project No. CL702A11, From Market Street to Sullivan Road, Carroll County).

The Department participated in discussions of this project at the Interagency Meeting. We have no comments on the Environmental Assessment document. We note that you have included in this document information on the natural resources found in and near the project study area. We advocate and support optimized protection of these natural resources as project planning and implementation continues.

If you have any questions concerning these comments, you may contact Greg Golden of my staff at 410-260-8334.

Sincerely,

Ray C. Dintaman, Jr.

Ray C. Dintaman, Jr., Director
Environmental Review

DEC 03 '04 PM 1 13

Robert L. Ehrlich, Jr., *Governor*
Michael S. Steele, *Lt. Governor*

SHA State Highway Administration

Robert L. Flanagan, *Secretary*
Neil J. Pedersen, *Administrator*

Maryland Department of Transportation

July 9, 2004

RE: Project No. CL702A11
MD 140: From Sullivan Road to Market Street
Carroll County, Maryland

Mr. Howard Redman, Jr., Administrator
Office of Public Safety
225 North Center Street
Westminster, MD 21157

Dear Mr. Redman:

The Maryland State Highway Administration has initiated a study to improve transportation mobility along MD 140 between Sullivan Road and Market Street in Westminster, Maryland. The purpose of the project is to address capacity problems and overall accessibility along the study portion of MD 140 in order to support sustainable growth in the area. We have developed a study area (see attached map) in which we will explore alternates to improve traffic operations and safety within the study area. The following alternates have been retained for detailed study:

Alternate 1 – No Build
No major improvements are proposed under Alternate 1, the No-Build Alternate. Minor short-term improvements would occur as part of normal maintenance and safety projects.

Alternate 2 – TSM/TDM Alternate
Alternate 2 (Figures 1 and 2) consists of Transportation System Management/Travel Demand Management (TSM/TDM) improvements at specific locations or segments of the roadway throughout the corridor. The most extensive improvements, including the addition of auxiliary and turn lanes, signal timing and optimization, and consolidation of access points, would occur at Center Street and Malcolm Drive. Minor intersection improvements and access consolidation would also occur at Sullivan Road, Englar Road, Cranberry Road, Gorsuch Road, and Market Street. The outside lanes of MD 140 would be widened in each direction, from 12 feet to 16 feet, which would accommodate on-road bicyclists. The alternate also includes a 5 foot sidewalk and improved pedestrian crossings throughout the project limits.

Alternate 5 – Single-Point Urban Interchanges (SPUI)
Alternate 5 (Figures 1, 5, and 7) includes SPUI configurations at Englar Road, Center Street, and Malcolm Drive. SPUI ramps are similar to traditional diamond interchanges, but curve inward and meet at a single traffic signal on the bridge, allowing opposing left turning movements to occur simultaneously.

Alternate 5 also incorporates a system of one-way service roads to separate local and through traffic while preserving access to properties along MD 140 between Malcolm Drive and Center Street. Gorsuch Road and Cranberry Street/Ralph Street would be reconfigured to provide right-in/right-out access to the service roads. Texas U-turn lanes would be introduced near the intersection of Center Street and Malcolm Drive to accommodate traffic currently turning left at the intersections of Gorsuch Road and Cranberry Street/Ralph Street. The outside lanes of MD 140 would be widened in each direction, from 12 feet to 16 feet, which would accommodate on-road bicyclists. The alternate also includes a 5 foot sidewalk and improved pedestrian crossings throughout the project limits.

Alternate 6 – Half-Bridge Interchanges
Alternate 6 (Figures 1, 6, and 7) includes carrying the westbound through lanes of MD 140 under Malcolm Drive and Center Street, while the eastbound lanes would remain at-grade with the existing intersection. At the Englar Road interchange, MD 140 eastbound through lanes would be carried under Englar Road, while the westbound lanes would be kept at existing grade. Between Center Street and Malcolm Drive, an at-grade westbound service road has been included to provide access to the MD 27 interchange and existing businesses. The outside lanes of MD 140 would be widened in each direction, from 12 feet to 16 feet, which would accommodate on-road bicyclists. The alternate also includes a 5 foot sidewalk and improved pedestrian crossings throughout the project limits.

Alternate 7 – Continuous Flow Intersections (CFI)
Alternate 7 (Figures 8, 9, 10, and 11) is designed to move the left turn conflicts for the mainline out of the main intersection. This is accomplished by crossing the left turning traffic and the oncoming through traffic at a signalized left turn bay placed several hundred feet before the intersection. Traffic from this early left turn bay is fed into a special "CFI leg", which in turn empties into the cross street at the main signalized intersection. The signals at the left turn bay and the main intersection are operated by a single controller and coordinated to provide smooth traffic flow.

Alternate 7 includes a CFI at the intersections of Englar Drive, Center Street, Malcolm Drive, and Market Street. The early left turn bays and "CFI legs" are included for both directions of mainline MD 140 for the intersections of Englar, Center, and Malcolm, while the Market Street intersection includes the CFI for eastbound MD 140 only. All of the remaining intersection improvements identified are similar to Alternate 2, TSM improvements.

The purpose of this letter is to request your input regarding the effects of our study alternates on emergency response times for fire and rescue services. All possible impacts that may result from this project, including any effects to emergency services and response time caused by changes in traffic circulation patterns, access and/or road construction in this area, must be investigated. These impacts may be positive, such as improved response times following the road improvements, or negative, such as delayed or longer response times. In addition, please comment on whether you prefer one alternate to the others.

Please provide your response by August 1, so that this information may be included in the draft Environmental Document being prepared for the project. If you have any questions or concerns, please free to contact Ms. Carmeletta Harris, project manager, toll free at 800-548-5026 or Ms. Patricia Greene, environmental manager, toll free at 866-527-0502.

Very truly yours,

Cynthia Simpson
Deputy Director
Office of Planning and
Preliminary Engineering

by: Joseph R. Kresslein
Joseph R. Kresslein
Assistant Division Chief
Project Planning Division

Enclosures
cc: Mr. Dennis Atkins, SHA-PPD
Ms. Patricia Greene, SHA-PPD
Ms. Carmeletta Harris, SHA-PPD
Mr. Joseph Kresslein, SHA-PPD
Ms. Cynthia D. Simpson, SHA-PPD

Robert L. Ehrlich, Jr., *Governor*
Michael S. Steele, *Lt. Governor*

SHA State Highway Administration

Robert L. Flanagan, *Secretary*
Neil J. Pedersen, *Administrator*

Maryland Department of Transportation

July 9, 2004

RE: Project No. CL702A11
MD 140: From Sullivan Road to Market Street
Carroll County, Maryland

Mr. Dean Brewer
Westminster Police Department
36 Locust Street
Westminster, MD 21157

Dear Mr. Brewer:

The Maryland State Highway Administration has initiated a study to improve transportation mobility along MD 140 between Sullivan Road and Market Street in Westminster, Maryland. The purpose of the project is to address capacity problems and overall accessibility along the study portion of MD 140 in order to support sustainable growth in the area. To address these needs we will explore alternates to improve traffic operations and safety within the study area developed for the project (see attached map). The following alternates have been retained for detailed study:

Alternate 1 – No Build
No major improvements are proposed under Alternate 1, the No-Build Alternate. Minor short-term improvements would occur as part of normal maintenance and safety projects.

Alternate 2 – TSM/TDM Alternate
Alternate 2 (Figures 1 and 2) consists of Transportation System Management/Travel Demand Management (TSM/TDM) improvements at specific locations or segments of the roadway throughout the corridor. The most extensive improvements, including the addition of auxiliary and turn lanes, signal timing and optimization, and consolidation of access points, would occur at Center Street and Malcolm Drive. Minor intersection improvements and access consolidation would also occur at Sullivan Road, Englar Road, Cranberry Road, Gorsuch Road, and Market Street. The outside lanes of MD 140 would be widened in each direction, from 12 feet to 16 feet, which would accommodate on-road bicyclists. The alternate also includes a 5 foot sidewalk and improved pedestrian crossings throughout the project limits.

Alternate 5 – Single-Point Urban Interchanges (SPUI)
Alternate 5 (Figures 1, 5, and 7) includes SPUI configurations at Englar Road, Center Street, and Malcolm Drive. SPUI ramps are similar to traditional diamond interchanges, but curve inward and meet at a single traffic signal on the bridge, allowing opposing left turning movements to occur simultaneously.

Alternate 5 also incorporates a system of one-way service roads to separate local and through traffic while preserving access to properties along MD 140 between Malcolm Drive and Center Street. Gorsuch Road and Cranberry Street/Ralph Street would be reconfigured to provide right-in/right-out access to the service roads. Texas U-turn lanes would be introduced near the intersection of Center Street and Malcolm Drive to accommodate traffic currently turning left at the intersections of Gorsuch Road and Cranberry Street/Ralph Street. The outside lanes of MD 140 would be widened in each direction, from 12 feet to 16 feet, which would accommodate on-road bicyclists. The alternate also includes a 5 foot sidewalk and improved pedestrian crossings throughout the project limits.

Alternate 6 – Half-Bridge Interchanges
Alternate 6 (Figures 1, 6, and 7) includes carrying the westbound through lanes of MD 140 under Malcolm Drive and Center Street, while the eastbound lanes would remain at-grade with the existing intersection. At the Englar Road interchange, MD 140 eastbound through lanes would be carried under Englar Road, while the westbound lanes would be kept at existing grade. Between Center Street and Malcolm Drive, an at-grade westbound service road has been included to provide access to the MD 27 interchange and existing businesses. The outside lanes of MD 140 would be widened in each direction, from 12 feet to 16 feet, which would accommodate on-road bicyclists. The alternate also includes a 5 foot sidewalk and improved pedestrian crossings throughout the project limits.

Alternate 7 – Continuous Flow Intersections (CFI)
Alternate 7 (Figures 8, 9, 10, and 11) is designed to move the left turn conflicts for the mainline out of the main intersection. This is accomplished by crossing the left turning traffic and the oncoming through traffic at a signalized left turn bay placed several hundred feet before the intersection. Traffic from this early left turn bay is fed into a special "CFI leg", which in turn empties into the cross street at the main signalized intersection. The signals at the left turn bay and the main intersection are operated by a single controller and coordinated to provide smooth traffic flow.

Alternate 7 includes a CFI at the intersections of Englar Drive, Center Street, Malcolm Drive, and Market Street. The early left turn bays and "CFI legs" are included for both directions of mainline MD 140 for the intersections of Englar, Center, and Malcolm, while the Market Street intersection includes the CFI for eastbound MD 140 only. All of the remaining intersection improvements identified are similar to Alternate 2, TSM improvements.

The purpose of this letter is to request your input regarding the effects of our study alternates on emergency response times for fire and rescue services. All possible impacts that may result from this project, including any effects to emergency services and response time caused by changes in traffic circulation patterns, access and/or road construction in this area, must be investigated. These impacts may be positive, such as improved response times following the road improvements, or negative, such as delayed or longer response times. In addition, please comment on whether you prefer one alternate to the others.

Please provide your response by August 1, so that this information may be include in the draft Environmental Document being prepared for the project. If you have any questions or concerns, please free to contact Ms. Carmeletta Harris, project manager, toll free at 800-548-5026 or Ms. Patricia Greene, environmental manager, toll free at 866-527-0502.

Very truly yours,

Cynthia Simpson
Deputy Director
Office of Planning and
Preliminary Engineering

by: Joseph R. Kresslein
Joseph R. Kresslein
Assistant Division Chief
Project Planning Division

Enclosures
cc: Mr. Dennis Atkins, SHA-PPD
Ms. Patricia Greene, SHA-PPD
Ms. Carmeletta Harris, SHA-PPD
Mr. Joseph Kresslein, SHA-PPD
Ms. Cynthia D. Simpson, SHA-PPD

Robert L. Ehrlich, Jr., *Governor*
Michael S. Steele, *Lt. Governor*

SHA State Highway Administration — Driven to Excel

Robert L. Flanagan, *Secretary*
Neil J. Pedersen, *Administrator*

Maryland Department of Transportation

July 9, 2004

RE: Project No. CL702A11
MD 140: From Sullivan Road to Market Street
Carroll County, Maryland

Mr. Kevin Utz, Chief
Westminster Fire Department
P.O. Box 357
Westminster, MD 21158

Dear Mr. Utz:

The Maryland State Highway Administration has initiated a study to improve transportation mobility along MD 140 between Sullivan Road and Market Street in Westminster, Maryland. The purpose of the project is to address capacity problems and overall accessibility along the study portion of MD 140 in order to support sustainable growth in the area. To address these needs we will explore alternates to improve traffic operations and safety within the study area developed for the project (see attached map). The following alternates have been retained for detailed study:

Alternate 1 – No Build
No major improvements are proposed under Alternate 1, the No-Build Alternate. Minor short-term improvements would occur as part of normal maintenance and safety projects.

Alternate 2 – TSM/TDM Alternate
Alternate 2 (Figures 1 and 2) consists of Transportation System Management/Travel Demand Management (TSM/TDM) improvements at specific locations or segments of the roadway throughout the corridor. The most extensive improvements, including the addition of auxiliary and turn lanes, signal timing and optimization, and consolidation of access points, would occur at Center Street and Malcolm Drive. Minor intersection improvements and access consolidation would also occur at Sullivan Road, Englar Road, Cranberry Road, Gorsuch Road, and Market Street. The outside lanes of MD 140 would be widened in each direction, from 12 feet to 16 feet, which would accommodate on-road bicyclists. The alternate also includes a 5 foot sidewalk and improved pedestrian crossings throughout the project limits.

My telephone number/toll-free number is _____
Maryland Relay Service for Impaired Hearing or Speech: 1.800.735.2258 Statewide Toll Free
Street Address: 707 North Calvert Street • Baltimore, Maryland 21202 • *Phone* 410.545.0300 • www.marylandroads.com

Alternate 5 – Single-Point Urban Interchanges (SPUI)
Alternate 5 (Figures 1, 5, and 7) includes SPUI configurations at Englar Road, Center Street, and Malcolm Drive. SPUI ramps are similar to traditional diamond interchanges, but curve inward and meet at a single traffic signal on the bridge, allowing opposing left turning movements to occur simultaneously.

Alternate 5 also incorporates a system of one-way service roads to separate local and through traffic while preserving access to properties along MD 140 between Malcolm Drive and Center Street. Gorsuch Road and Cranberry Street/Ralph Street would be reconfigured to provide right-in/right-out access to the service roads. Texas U-turn lanes would be introduced near the intersection of Center Street and Malcolm Drive to accommodate traffic currently turning left at the intersections of Gorsuch Road and Cranberry Street/Ralph Street. The outside lanes of MD 140 would be widened in each direction, from 12 feet to 16 feet, which would accommodate on-road bicyclists. The alternate also includes a 5 foot sidewalk and improved pedestrian crossings throughout the project limits.

Alternate 6 – Half-Bridge Interchanges
Alternate 6 (Figures 1, 6, and 7) includes carrying the westbound through lanes of MD 140 under Malcolm Drive and Center Street, while the eastbound lanes would remain at-grade with the existing intersection. At the Englar Road interchange, MD 140 eastbound through lanes would be carried under Englar Road, while the westbound lanes would be kept at existing grade. Between Center Street and Malcolm Drive, an at-grade westbound service road has been included to provide access to the MD 27 interchange and existing businesses. The outside lanes of MD 140 would be widened in each direction, from 12 feet to 16 feet, which would accommodate on-road bicyclists. The alternate also includes a 5 foot sidewalk and improved pedestrian crossings throughout the project limits.

Alternate 7 – Continuous Flow Intersections (CFI)
Alternate 7 (Figures 8, 9, 10, and 11) is designed to move the left turn conflicts for the mainline out of the main intersection. This is accomplished by crossing the left turning traffic and the oncoming through traffic at a signalized left turn bay placed several hundred feet before the intersection. Traffic from this early left turn bay is fed into a special "CFI leg", which in turn empties into the cross street at the main signalized intersection. The signals at the left turn bay and the main intersection are operated by a single controller and coordinated to provide smooth traffic flow.

Alternate 7 includes a CFI at the intersections of Englar Drive, Center Street, Malcolm Drive, and Market Street. The early left turn bays and "CFI legs" are included for both directions of mainline MD 140 for the intersections of Englar, Center, and Malcolm, while the Market Street intersection includes the CFI for eastbound MD 140 only. All of the remaining intersection improvements identified are similar to Alternate 2, TSM improvements.

The purpose of this letter is to request your input regarding the effects of our study alternates on emergency response times for fire and rescue services. All possible impacts that may result from this project, including any effects to emergency services and response time caused by changes in traffic circulation patterns, access and/or road construction in this area, must be investigated. These impacts may be positive, such as improved response times following the road improvements, or negative, such as delayed or longer response times. In addition, please comment on whether you prefer one alternate to the others.

Please provide your response by August 1, so that this information may be included in the draft Environmental Document being prepared for the project. If you have any questions or concerns, please free to contact Ms. Carmeletta Harris, project manager, toll free at 800-548-5026 or Ms. Patricia Greene, environmental manager, toll free at 866-527-0502.

Very truly yours,

Cynthia Simpson
Deputy Director
Office of Planning and
Preliminary Engineering

by: Joseph R. Kressl

Joseph R. Kresslein
Assistant Division Chief
Project Planning Division

Enclosures
cc: Mr. Dennis Atkins, SHA-PPD
Ms. Patricia Greene, SHA-PPD
Ms. Carmeletta Harris, SHA-PPD
Mr. Joseph Kresslein, SHA-PPD
Ms. Cynthia D. Simpson, SHA-PPD

Robert L. Ehrlich, Jr., *Governor*
Michael S. Steele, *Lt. Governor*

SHA State Highway Administration "Driven to Excel"

Robert L. Flanagan, *Secretary*
Neil J. Pedersen, *Administrator*

MARYLAND DEPARTMENT OF TRANSPORTATION

August 7, 2003

Re: Project No. CL702A11
MD 140: Old Baltimore Road to Sullivan Road
Carroll County, MD
USGS *Westminster* 7.5" Quadrangle

Mr. J. Rodney Little
State Historic Preservation Officer
Maryland Historical Trust
100 Community Place
Crownsville MD 21032-2023

Dear Mr. Little:

Introduction and Project Description

This letter serves to inform the Maryland Historical Trust (MHT) of our finding that there will be no historic properties affected by the proposed project CL702A11. The project involves the widening of existing MD 140 between Old Baltimore Road and Sullivan Road, with interchange improvements at Malcolm Drive, Center Street, and Englar Road. A location map is attached for your reference as **Attachment 1.** A cultural resources map depicting the APE is provided as **Attachment 2.**

The State Highway Administration previously received your concurrence on October 16, 2001 that the project's APE contained no historic standing structures and had a low potential for significant archeological resources. Since that time we have further developed the project's alternates to include preliminary right of way limits. In addition to the No-Build Alternate, five build alternates are proposed; of these, it is anticipated that Alternates 2, 5, 6 and the No-Build Alternate will be retained for further detailed study. Alternates mapping is provided as **Attachment 3.**

Funding

Federal funds are anticipated for this project.

Area of Potential Effects

The Area of Potential Effects (APE) for this project was defined during our initial consultation regarding identification and evaluation (SHA letter of September 18, 2001). At that time, the APE was conceptualized as a band measuring 280 feet wide along the existing alignment of MD 140 between Old Baltimore Road and Sullivan Road, partially within the City of

My telephone number/toll-free number is _____
Maryland Relay Service for Impaired Hearing or Speech 1.800.201.7165 Statewide Toll Free
Street Address: 707 North Calvert Street • Baltimore, Maryland 21202 • *Phone* 410.545.0300 • www.marylandroads.com

Westminster. The APE also included a 500 foot radius at the intersections of Malcolm Drive, Center Street, and Englar Road. The APE was designed broadly at that time to accommodate a worse case scenario in anticipation of the future development of alternates. For the current alternates, the APE is defined by the limits of proposed right of way, which is confined within the area previously studied in 2001. There has been no expansion of the APE since our consultation in 2001.

Identification Methods and Results

Potentially significant architectural and archeological resources were both researched as part of the historic investigation instigated by the proposed widening and intersection improvements on MD 140 between Old Baltimore Road and Sullivan Road.

Architecture: SHA architectural historian Rita M. Suffness consulted inventories and documentary resource material, including the SHA-GIS cultural resources database, to ascertain that no new resources have been inventoried since 2001. Consequently, there are no historic standing structures within the APE.

Archeology: SHA archeologist Mary F. Barse previously assessed the potential of the project area through consultation of the SHA-GIS cultural resources database, previous archeological studies, historic mapping, and modern land use mapping, and conducted a field visit on August 13, 2001. Based on the results of prior survey efforts on MD 140 and extensive disturbance, it was concluded that the APE was not likely to contain significant archeological deposits. The MHT agreed in our recommendation that no further archeological investigations were warranted.

Review Request

Please examine the attached maps and plans. We request your concurrence by September 11, 2003 that there would be no historic properties affected by the widening and intersection improvements planned on MD 140 between Old Baltimore Road and Sullivan Road. By copy of this letter, we invite the Carroll County Historic District Commission to provide comments and participate in the Section 106 process. Pursuant to the requirements of the implementing regulations found at 36 CFR Part 800, SHA seeks their assistance in identifying historic preservation issues as they relate to this specific project (see 36 CFR 800.2 (c) (4) and (6), and 800.3 (f) for information regarding the identification and participation of consulting parties, and 800.4, and 800.5 regarding the identification of historic properties and assessment of effects). For additional information regarding the Section 106 regulations, see the Advisory Council on Historic Preservation's website, www.achp.gov, or contact the Maryland State Highway Administration or the Maryland Historical Trust.) If no response is received by September 11, 2003, we will assume that this office declines to participate. Please call Ms. Rita Suffness at 410-545-8561 with questions regarding standing structures for this project. Ms. Mary F. Barse may be reached at 410-545-2883 with concerns regarding archeology.

Very truly yours,

Cynthia D. Simpson
Deputy Director
Office of Planning and
Preliminary Engineering

by: B. M. G.
Bruce M. Grey
Deputy Division Chief
Project Planning Division

Attachments: 1) Project Location Map
2) SHA-GIS *Westminster* Quad with Inventoried Resources and APE Indicated
3) Project Plans

cc: Mr. Eric Almquist, SHA-PPD (w/Attachments 1 and 2)
Ms. Mary F. Barse, SHA-PPD (w/Attachments 1 and 2)
Ms. Carmeletta Harris, SHA-PPD (w/Attachments 1 and 2)
Mr. Joseph Kresslein, SHA-PPD
Ms. Barbara Ollis, Carroll County Historic District Commission (w/Attachments)
Ms. Cynthia D. Simpson, SHA-OPPE
Ms. Rita Suffness, SHA-PPD (w/Attachments 1 and 2)
Mr. Donald H. Sparklin, SHA-PPD

Eric Almquist

Concurrence with the MD State Highway Administration's Determination(s) of Eligibility and/or Effects

Project Number: CL702A11 MHT Log No. 20030319
Project Name: MD 140: Old Baltimore Road to Sullivan Road
County: Carroll
Letter Date: August 7, 2003

AUG 25 '03 2:34 P.M.

The Maryland Historical Trust has reviewed the documentation attached to the referenced letter and concurs with the MD State Highway Administration's determinations as follows:

Eligibility (as noted in the Eligibility Table [N/A]):
[ ] Concur
[ ] Do Not Concur

Effect (as noted in the Effect Table [N/A]):
[X] No Properties Affected
[ ] No Adverse Effect
[ ] Conditioned upon the following action(s) (see comments below)
[ ] Adverse Effect

Agreement with FHWA's Section 4(f) criteria of temporary use (as detailed in the referenced letter, if applicable):
[ ] Agree

Comments:

By: E. J. Cole 8/20/03
MD State Historic Preservation Office/ Date
Maryland Historical Trust

Return by U.S. Mail or Facsimile to:
Mr. Bruce M. Grey, Deputy Division Chief, Project Planning Division,
MD State Highway Administration, P.O. Box 717, Baltimore, MD 21203-0717
Telephone: 410-545-8540 and Facsimile: 410-209-5004

Maryland Department of Transportation
State Highway Administration

Robert L. Ehrlich, Jr.
Governor

John D. Porcari
Secretary

Parker F. Williams
Administrator

RECEIVED
SEP 20 2001

September 18, 2001

Re: Project No. CL702A11
MD 140: Old Baltimore Road to Sullivan Road
Carroll County, MD
USGS *Westminster* 7.5" Quadrangle

Mr. J. Rodney Little
State Historic Preservation Officer
Maryland Historical Trust
100 Community Place
Crownsville MD 21032-2023

Dear Mr. Little:

Introduction and Project Description

This letter serves to initiate consultation with the Maryland Historical Trust (MHT) for a new Project Planning study, and to seek your comments on identification and evaluation of historic properties. The project involves the widening of existing MD 140 between Old Baltimore Road and Sullivan Road, with interchange improvements at Malcolm Drive, Center Street, and Englar Road. A location map is attached for your reference (**Attachment I**).

Funding

Federal funds are anticipated for this project.

Area of Potential Effects

The area of potential effects (APE) for this project is indicated on the attached State Highway Administration *Westminster* quadrangle map in Carroll County, Maryland (**Attachment II**). Although project plans have not been developed at this time, the APE has been established broadly to accommodate anticipated worst case impacts. The limits of the APE are defined as a band extending 100 feet from the edge of pavement on each side of existing MD 140 (for a bandwidth of approximately 280 feet) with a 500-foot radius at the intersections of Malcolm Drive, Center Street and Englar Road. For standing structures, the APE includes the area into which elements could be introduced which would have the potential to affect characteristics qualifying resources for inclusion in the National Register of Historic Places (NRHP). Regarding archeological resources, it is coterminous with the area of direct construction impact. The nature of the area has been considered as regards the nature of the work within its context, relating to the terrain, the topography and the extent of the viewsheds.

My telephone number is _____

Maryland Relay Service for Impaired Hearing or Speech
1-800-735-2258 Statewide Toll Free

Mailing Address: P.O. Box 717 • Baltimore, MD 21203-0717
Street Address: 707 North Calvert Street • Baltimore, Maryland 21202

Identification Methods and Results

Potentially significant architectural and archeological resources were both researched as part of the historic investigation instigated by the proposed widening and intersection improvements on MD 140 between Old Baltimore Road and Sullivan Road.

Architecture: SHA architectural historian Rita M. Suffness consulted inventories and documentary resource material, including the SHA-GIS quadrangle mapping, and photographs, to identify and evaluate the full range of architectural resources within the APE. One historic property, the D. Mitten House (CARR-1431), is located on the west side of Gorsuch Road, outside the current APE. The property was determined ineligible for inclusion in the NRHP during prior consultation for the MD 140 project from Reese Road to Hughes Shop Road (the former Westminster Bypass Project). The MHT concurred with this determination on December 19, 1995. Although the attached SHA-GIS cultural resources map (**Attachment II**) shows the property extending into the APE, CARR-1431 is actually situated well back from MD 140, on the west side of Gorsuch Road which parallells MD 140. The intervening tract of land between Gorsuch Road and MD 140 is occupied by a strip mall development and an auto repair business.

There are no historic standing structures within the APE.

Archeology: SHA archeologist Mary F. Barse assessed the potential of the project area through consultation of the SHA-GIS archeological sites and surveys database, previous archeological studies, historic mapping, and modern land use mapping. In addition, a field visit was conducted on August 13, 2001.

There are no previously recorded archeological sites in or near the project's APE, which was included in a prior survey by Walker et al. (1994) for the Westminster Bypass. However, no actual testing was conducted at that time due to prior disturbance and consequent low archeological potential. Our August 13, 2001, field visit confirmed that the current APE has been completely disturbed by extensive commercial development. Given the results of prior survey efforts on MD 140 and degree of disturbance, the APE is considered to have low archeological potential and no further archeological investigations are recommended.

Review Request

Please examine the attached maps. We request your concurrence by October 22 that there are no standing structures within the APE, and no additional archeological investigations are warranted. We will continue to consult with your office for an effect determination once purpose and need have been approved, and the scope of the project is better defined. By carbon copy, we invite the Carroll County Historic District Commission to provide comments and participate in the Section 106 process. Pursuant to the requirement of the implementing regulations found at 36 CFR Part 800, SHA seeks their assistance in identifying historic preservation issues as they relate to this specific project (see 36 CFR 800.2 (c) (4) and (6), and 800.3 (f) for information regarding the identification and participation of consulting parties, and

800.4, and 800.5 regarding the identification of historic properties and assessment of effects). For additional information regarding the Section 106 regulations, see the Advisory Council on Historic Preservation's website, www.achp.gov, or contact the Maryland State Highway Administration or the Maryland Historical Trust. If no response is received by October 22 we will assume that this office declines to participate. Please call Ms. Rita Suffness at 410-545-8561 with questions regarding standing structures for this project. Ms. Mary F. Barse may be reached at 410-545-2883 with concerns regarding archeology.

Very truly yours,

Cynthia D. Simpson
Deputy Director
Office of Planning and
Preliminary Engineering

by: B M G
Bruce M. Grey
Deputy Division Chief
Project Planning Division

CONCURRENCE:

E. Irvin Jr. Cole
State Historic Preservation Office

10/16/2001
Date

BMG:MFB:lc

Attachments: I) Location Map
II) SHA *Westminster* Quad with Inventoried Resources and APE Indicated

cc: Ms. Mary F. Barse, SHA-PPD (w/ Attachments)
Dr. Charles Hall, SHA-PPD
Mr. Joseph Kresslein, SHA-PPD
Ms. Barbara Ollis, Carroll County Historic District Commission (w/Attachments)
Ms. Shannon Rousey, SHA-PPD (w/Attachments)
Mr. Dan Scheib, SHA-PPD
Ms. Cynthia D. Simpson, SHA-PPD
Mr. Donald H. Sparklin, SHA-PPD
Ms. Rita Suffness, SHA-PPD (w/Attachments)

United States Department of the Interior

FISH AND WILDLIFE SERVICE
Chesapeake Bay Field Office
177 Admiral Cochrane Drive
Annapolis, MD 21401

August 1, 2001

Ms. Cynthia D. Simpson
Deputy Director
Office of Planning and Preliminary Engineering
State Highway Administration
P.O. Box 717
Baltimore, MD 21203-0717

ATTN: Mr. Joseph Kresslein

RE: Project No. CL702A11
MD 140 through Westminster
Carroll County, MD

Dear Ms. Simpson:

This responds to your June 20, 2001, request for information on the presence of species which are federally listed or proposed for listing as endangered or threatened within the vicinity of MD 140, through Westminster. We have reviewed the information you enclosed and are providing comments in accordance with Section 7 of the Endangered Species Act (87 Stat. 884, as amended; 16 U.S.C. 1531 *et seq.*).

Except for occasional transient individuals, no federally proposed or listed endangered or threatened species are known to exist within the project impact area. Therefore, no biological assessment or further Section 7 consultation is required with the U.S. Fish and Wildlife Service. Should project plans change, or if additional information on the distribution of listed or proposed species becomes available, this determination may be reconsidered.

This response relates only to federally protected threatened or endangered species under our jurisdiction. It does not address the Service's concerns pursuant to the Fish and Wildlife Coordination Act or other legislation. For information on the presence of other rare species, you should contact Ms. Lori Byrne of the Maryland Heritage and Wildlife Division at (410) 260-8573.

Parris N. Glendening
Governor

Kathleen Kennedy Townsend
Lt. Governor

Maryland Department of Natural Resources
Forest, Wildlife and Heritage Service
Tawes State Office Building
Annapolis, Maryland 21401

Sarah J. Taylor-Rogers, Ph. D.
Secretary

Stanley K. Arthur
Deputy Secretary

July 25, 2001

Ms. Cynthia D. Simpson
Maryland Department of Transportation
State Highway Administration
P.O. Box 717
Baltimore, MD 21203-0717

RE: Environmental Review for Project No. CL702A11, MD 140 through Westminster, Carroll County, Maryland.

Dear Ms. Simpson

The Wildlife and Heritage Division has no records for Federal or State rare, threatened or endangered plants or animals within this project site. This statement should not be interpreted as meaning that no rare, threatened or endangered species are present. Such species could be present but have not been documented because an adequate survey has not been conducted or because survey results have not been reported to us.

Sincerely,

Lori A. Byrne

Lori A. Byrne,
Environmental Review Specialist,
Wildlife and Heritage Division

ER# 2001.1285.cl
cc: Ray Dintaman, Jr., DNR

Telephone: (410) 260-8540
DNR TTY for the Deaf 410-974-3683

Parris N. Glendening
Governor

Kathleen Kennedy Townsend
Lt. Governor

Maryland Department of Natural Resources
ENVIRONMENTAL REVIEW
Tawes State Office Building
Annapolis, Maryland 21401

Sarah J. Taylor-Rogers, Ph.D.
Secretary

Stanley K. Arthur
Deputy Secretary

June 22, 2001

Mr. Donald Sparklin
Project Planning Division
Maryland Department of Transportation
State Highway Administration
P.O. Box 717
Baltimore, Maryland 21203-0717

Dear Mr. Sparklin:

This letter is in response to your letter of request, dated June 19, 2001, for information on the presence of finfish species in the vicinity of the Maryland Department of Transportation's Project No. CL702A11: MD 140 through Westminster in Carroll County.

From a review of the information provided with your request it appears that the proposed work could impact drainages to West Branch of the Patapsco River (Patapsco River Drainage Area). Tributaries to West Branch, in the vicinity of the subject proposed project, are classified as Use I streams (Water Contact Recreation and Protection of Aquatic Life). Generally, no instream work is permitted in Use I streams during the period of March 1 through June 15, inclusive, during any year.

Anadromous fish species are not present in West Branch or any tributaries near your project site. Trout have been documented in West Branch downstream from your project site at Gorsuch Road crossing. In addition to trout, Table F4-3 (attached) lists other fish species documented by our Fisheries Service in the Patapsco River Drainage Basin. Many of these species could potentially be found near your project site. These species should be protected by the Use I instream work prohibition period, sediment and erosion control methods, and other Best Management Practices typically used for protection of stream resources.

If you have any questions concerning these comments, you may contact me at 410-260-8331.

Sincerely,

Ray C. Dintaman, Jr.

Ray C. Dintaman, Jr., Director
Environmental Review Unit

RCD
Attachment

Telephone: (410) 260-8330
DNR TTY for the Deaf: (410) 260-8835
Toll Free #: 1-877-620-8DNR

JUL-18-2001(WED) 12:52 SHA PPD 410 209 5004 P.002

Table F4-3. Species found in 1995 MBSS Study vs Qualitative Study, Patapsco Basin

Species Found in 1995 MBSS Study vs Qualitative Study
By Basin

BASNAME=PATAPSCO

Fish Species	in MBSS Study	in Qual. Study
LEAST BROOK LAMPREY	X	X
AMERICAN EEL	X	X
CHAIN PICKEREL	X	
REDFIN PICKEREL	X	X
EASTERN MUDMINNOW	X	X
BLACKNOSE DACE	X	X
BLUNTNOSE MINNOW	X	X
CENTRAL STONEROLLER	X	X
COMMON CARP	X	
COMMON SHINER	X	X
CREEK CHUB	X	X
CUTLIPS MINNOW	X	X
FALLFISH	X	X
FATHEAD MINNOW	X	
GOLDEN SHINER	X	X
LONGNOSE DACE	X	X
RIVER CHUB	X	X
ROSYFACE SHINER	X	X
ROSYSIDE DACE	X	X
SATINFIN SHINER	X	X
SILVERJAW MINNOW	X	X
SPOTFIN SHINER		X
SPOTTAIL SHINER	X	X
SWALLOWTAIL SHINER	X	X
CREEK CHUBSUCKER	X	X
NORTHERN HOGSUCKER	X	X
WHITE SUCKER	X	X
BROWN BULLHEAD	X	X
MARGINED MADTOM	X	X
YELLOW BULLHEAD	X	X
BROOK TROUT	X	X
BROWN TROUT	X	X
RAINBOW TROUT		X
BANDED KILLIFISH		X
MUMMICHOG	X	X
MOSQUITOFISH	X	
MOTTLED SCULPIN	X	X
BLACK CRAPPIE	X	X
BLUEGILL	X	X
BLUESPOTTED SUNFISH	X	X
GREEN SUNFISH	X	X
LARGEMOUTH BASS	X	X
PUMPKINSEED	X	X
REDBREAST SUNFISH	X	X
ROCK BASS	X	X
SMALLMOUTH BASS	X	X
LEPOMIS HYBRID	X	
TESSELLATED DARTER	X	X
YELLOW PERCH	X	X

18-2001(WED) 12:53 SHA PPD 410 209 5004 P.003

Public Correspondence

Robert L. Ehrlich, Jr., *Governor*
Michael S. Steele, *Lt. Governor*

SHA State Highway Administration — Drive to Excel

Robert L. Flanagan, *Secretary*
Neil J. Pedersen, *Administrator*

Maryland Department of Transportation

February 8, 2005

Mr. Ben Perricone
P.O. Box 1332
Westminster, Maryland 21158

Dear Mr. Perricone:

Thank you for your interest in the MD 140 Transportation Improvement Study in Carroll County. The State Highway Administration (SHA) appreciates your concerns regarding traffic, business impacts, and project costs related to this project. We hope that this letter more clearly answers your questions than our previous correspondence.

Traffic analyses indicate that traffic operations along MD 140 within the project limits will deteriorate in the future without significant operational and capacity improvements along MD 140. It is important to note that while the SHA does consider existing operations as part of a planning study, we focus on a horizon year well in the future (2025). We base our improvements on addressing projected traffic growth and operations in that design year (2025).

Currently, nearly all signalized intersections along MD 140 from Market Street to Sullivan Road operate at an acceptable Level of Service (LOS 'A' to 'D'), with the exception of the MD 140/Market Street intersection, which has a failing LOS during the evening peak hour. Level of Service (LOS) is a measure of the congestion experienced by drivers, and ranges from 'A' (free flow with little or no congestion) to 'F' (stop-and-go condition or congested traffic flow). However, the Average Annual Daily Traffic (AADT) within the Study Area is projected to increase significantly in the future; the increase in AADT ranges from 35% to 63% from the year 2000 to the design year 2025. Analysis of the Alternate 1; "No-Build" condition indicates that, because of this increase in traffic, all of the intersections along MD 140 within the project limits will fail (LOS 'F') in the design year 2025.

My telephone number/toll-free number is _____
Maryland Relay Service for Impaired Hearing or Speech 1.800.735.2258 Statewide Toll Free
Street Address: 707 North Calvert Street - Baltimore, Maryland 21202 - *Phone* 410.545.0300 - www.marylandroads.com

The SHA often hears the comment from concerned citizens that traffic conditions can be improved by simply retiming the traffic lights. In fact, before embarking on a major endeavor such as this study, the SHA does look at low cost operational improvements, including signal timing. The MD 140 corridor from Market Street to Sullivan Road is already part of a coordinated hardwire interconnected signal system. The signal system is capable of adjusting timing sequences automatically in response to increases in traffic flow along MD 140 at any time of the day. The traffic signal at MD 140 and WMC Drive currently runs free during the PM peak period. The SHA believes that the current signal timing is reasonable, evenly distributed, and provides a balanced flow for all users. As part of our analysis, the SHA will continue to investigate signal timing optimization and other low cost improvements.

Currently, a through lane is dropped from MD 140 northwest of this project's study limits. An additional through lane will be constructed along westbound MD 140 from MD 97 North to just west of WMC Drive as a condition of the Village of Meadow Creek development, Phase I (residential) is currently under construction and adds the fourth leg to the intersection of MD 140 and WMC Drive. The Phase I improvements also include a separate left turn lane along eastbound MD 140 and an acceleration/deceleration lane along westbound MD 140. The additional through lane along westbound MD 140 will be constructed during Phase II of this project which includes both residential and commercial development. To obtain detailed information about this developer driven project, please contact Mr. Raymond Burns, SHA Access Permits, at 410-545-5592.

In your letter, you expressed concerned that quality of life in the community has not been considered. The impacts to businesses and the quality of life in Westminster have not been ignored. In fact, it is an SHA objective to minimize impacts throughout this corridor, while meeting the areas transportation needs. The SHA attempts to find a balance between improving traffic flow, safety improvements, and community impacts.

While the focus of the MD 140 Transportation Improvement Study is the MD 140 corridor from Market Street to Sullivan Road, other transportation needs in Carroll County are not being ignored. You indicated an interest in the MD 30 Hampstead Bypass, which is currently in final design and is scheduled to begin construction in the Spring of 2006. The approximately 4.5 mile long bypass should take about three years to build. Should you have any more questions regarding the MD 30 Hampstead Bypass, please contact Ms. Kate Mazzara, SHA Office of Highway Design, at 410-545-8826.

Again, thank you for your interest in the MD 140 Transportation Improvement Study. If you have any questions, please contact the project manager, Ms. Carmeletta T. Harris at 410-545-8522 or the project engineer, Mr. Michael Holmes, at 410-545-8509. They can also be reached at 1-800-548-5026 and via email respectively at charris@sha.state.md.us and mholmes1@sha.state.md.us.

Very truly yours,

Bruce M. Grey
Deputy Director
Office of Planning and
Preliminary Engineering

By: 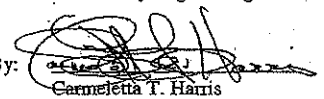
Carmeletta T. Harris
Project Manager
Project Planning Division

cc: Mr. Raymond Burns, Access Permits, State Highway Administration (w/incoming)
Ms. Jean Cavey, District 7 Traffic, State Highway Administration (w/incoming)
Ms. Pat Greene, Environmental Manager, State Highway Administration (w/incoming)
Ms. Kate Mazzara, Office of Highway Design, State Highway Administration (w/incoming)
Mr. Ray Moravec, URS (w/incoming)

Michael Holmes - 140 transportation improvment study

From: "briellafarm" <briellafarm@adelphia.net>
To: <charris@sha.state.md.us>, <mholmes1@sha.state.md.us>, <csimpson@sha.state.md.us>, <bgrady@carrollcountychamber.org>
Date: 01/17/2005 8:39 AM
Subject: 140 transportation improvment study

I am in receipt of a letter dated December 9,2004 from Cynthia Simpson, deputy director office of planning & preliminary engineering.
It seems Ms. Simpson either did not understand my comments or gave me a standard boilerplate response.
The "models" showing traffic failures at intersections does not tell the full story. Anyone in the area can tell you that traffic is worse only during rush hours, and that is because of the lack of any coordination of the traffic light signal pattern. even if one looks at a Saturday or Sunday, traffic is heavy but not ugly and with a up to date traffic signal plan, many of the "failing" intersections can be corrected. When driving RT 140 during non rush hours, the road is wide open to traffic. I don't see how destroying businesses, and creating huge intersections, adds to the quality of life in this county.
While I understand road design & planning is necessary to justify state jobs, the ultimate regard must be to the private citizen & private business, who through taxes (taking of wages & profits) pays for those jobs.
The true question is, what is the cost to the taxpayer to build, plan or even consider the highway to nowhere through the middle of Westminster. Why are taxpayers being asked to pay for a multi lane highway when at the north end of town it funnels to one lane again?
I would again strongly suggest the public servants at SHA work to revise and update the traffic light patterns on 140 before committing the taxpayers to burden of paying for an project which will not improve traffic, but make it worse.
There are many more projects in Carroll County requiring immediate action now. The Rt. 30 bypass has lingered for over 30 years. It seems to me the SHA should take your talents and use them to help speed that project along that much quicker.

While your first response to this letter may be to assign it to the "doesn't know what he's talking about pile", remember it the taxpayer which funds all this and the point quickly emerges where we get tired of being fleeced, especially when real solutions go untried and unused.

Thank you for your time,

Sincerely

Ben Perricone

January 24, 2005

Mr. Ben Perrieone
P.O. Box 1332
Westminster MD 21158

Dear Mr. Perrieone:

Thank you for your interest in the MD 140 Transportation Improvement Study in Carroll County. The State Highway Administration (SHA) appreciates your concerns regarding traffic through Westminster. Your support of Alternate 1, No-Build has been noted. Your comments will be included in the official Public Hearing record.

Currently, the traffic flow on MD 140 between Market Street and Sullivan Avenue has been operating at acceptable levels. However, traffic models indicate that the intersections within the study area will have a failing Level Of Service (LOS of F) by the year 2025. The LOS is determined based on the number of vehicles using an intersection. The LOS is similar to a child's report card; a LOS of "A" represents excellent operating conditions, while a LOS of "F" indicates that there is significant congestion.

While there may be other traffic issues in the area, this project team is currently identifying solutions to improve the MD 140 Corridor from Market Street to Sullivan Road. The limits were chosen to keep the project a manageable size and deal with traffic issues in the immediate Westminster area.

Again, thank you for your interest in the MD 140 Transportation Improvement Study. If you have any questions, please contact the project manager, Ms. Carmeletta T. Harris at 410-545-8522 or the project engineer, Mr. Michael Holmes, at 410-545-8509. They can also be reached at 1-800-548-5026 and via email respectively at charris@sha.state.md.us and mholmes1@sha.state.md.us.

Very truly yours,

Cynthia D. Simpson
Deputy Director
Office of Planning and
Preliminary Engineering

By: _____
Carmeletta T. Harris
Project Manager
Project Planning Division

cc: Ms. Pat Greene, Environmental Manager, State Highway Administration (w/incoming)
Mr. Ray Moravec, URS (w/incoming)

STATE HIGHWAY ADMINISTRATION
QUESTIONS AND/OR COMMENTS

CL702A11
LOCATION/DESIGN PUBLIC HEARING

MD 140 (WESTMINSTER)
FROM MARKET STREET TO SULLIVAN ROAD

TUESDAY, OCTOBER 26, 2004, 5:30 P.M.
HENRY C. EVANS ARMORY
350 HAHN ROAD
WESTMINSTER, MD 21157

PLEASE PRINT

NAME Ben Perriene DATE 10/26/04

ADDRESS PO Box 1332

CITY Westminster STATE md ZIP 21158

I/We wish to comment or inquire about the following aspects of this project:

I favor and strongly urge Alternate 1. The fact is only during Rush hour is traffic flow heavy. Even on weekends no uncontrollable delays exist. Building a highway thru Westminster while leaving the entering portion of 140 and existing portion just 2 lanes leads one to wonder why the expense of a "racetrack" thru town.??

☐ Please add my/our name(s) to the Mailing List.*

☐ Please delete my/our name(s) from the Mailing List.

* Persons who have received a copy of this brochure through the mail are already on the project Mailing List

Robert L. Ehrlich, Jr., *Governor*
Michael S. Steele, *Lt. Governor*

SHA State Highway Administration

Robert L. Flanagan, *Secretary*
Neil J. Pedersen, *Administrator*

Maryland Department of Transportation

January 19, 2005

Mr. & Mrs. David Taylor
1150 Pinch Valley Road
Westminster MD 21158

Dear Mr. & Mrs. Taylor:

Thank you for your interest in the MD 140 Transportation Improvement Study in Carroll County. The State Highway Administration (SHA) appreciates your concerns regarding traffic in the Westminster area. Your comments will be included in the official Public Hearing record.

While there may be other traffic issues in the area, this project team is currently identifying solutions to improve the MD 140 Corridor from Market Street to Sullivan Road. The limits were chosen to keep the project a manageable size and deal with traffic issues in the immediate Westminster area.

The traffic congestion along MD 97 in the vicinity of Airport Drive/Magna Way and along MD 140 in the vicinity of MD 31 is a concern that the District-7 Traffic Office has been addressing for several years. The signal timing at the intersection of MD 97 Airport Drive/Magna Way has been optimized to meet the demand of the increasing traffic volumes along this corridor. MD 97 at Airport Drive/Magna Way currently receives as much green time as possible without causing significant delay for the side street traffic. No changes to the traffic signal timing are recommended at this time. To improve intersection capacity along MD 97 would require widening for additional through lanes. SHA's Engineering Access Permits Division is aware of various proposed developments which will impact the MD 97 corridor; however, a developer mitigation plan for roadway improvements has not been solidified at this time.

The MD 140 corridor from Market Street to MD 31 is part of a coordinated hardwire interconnected signal system. The signal system is capable of adjusting timing sequences automatically in response to increases in traffic flow along MD 140 at any time of the day. The traffic signal at MD 140 and WMC Drive, near the Best Western, currently runs free during the PM peak period. Our traffic engineers believe that the current signal timing is reasonable, evenly distributed, and provides a balanced flow for all users and changes to the signal system are not being recommending at this time. A second through lane will be constructed along westbound MD 140 from MD 97 North to just west of WMC Drive as a condition of the Village of Meadow Creek development. Phase I (residential) is currently under construction and adds the forth leg to the intersection of MD 140 and WMC Drive.

The Phase I improvements also include a separate left turn lane along eastbound MD 140 and an acceleration/deceleration lane along westbound MD 140. The second through lane along westbound MD 140 will be constructed during Phase II of this project which includes both residential and commercial development. There is no schedule for this work because it is developer driven.

Again, thank you for your interest in the MD 140 Transportation Improvement Study. If you have any questions, please contact the project manager, Ms. Carmeletta T. Harris at 410-545-8522 or the project engineer, Mr. Michael Holmes, at 410-545-8509. They can also be reached at 1-800-548-5026 and via email respectively at charris@sha.state.md.us and mholmes1@sha.state.md.us.

Very truly yours,

Cynthia D. Simpson
Deputy Director
Office of Planning and
Preliminary Engineering

By: _____
for Carmeletta T. Harris
Project Manager
Project Planning Division

cc: Ms. Jean Cavey, District 7 Traffic, SHA (w/incoming)
Mr. Steve Foster, Access Permits, SHA (w/incoming)
Ms. Pat Greene, Environmental Manager, SHA (w/incoming)
Mr. Ray Moravec, Project Manager, URS Corp. (w/incoming)

STATE HIGHWAY ADMINISTRATION
QUESTIONS AND/OR COMMENTS

CL702A11
LOCATION/DESIGN PUBLIC HEARING

MD 140 TRANSPORTATION IMPROVEMENT STUDY
FROM MARKET STREET TO SULLIVAN ROAD

TUESDAY, OCTOBER 26, 2004
5:30 P.M. - 8:30 P.M.

HENRY C. EVANS ARMORY
350 HAHN ROAD
WESTMINSTER, MD 21157

PLEASE PRINT

NAME DAVID + DOROTHY TAYLOR **DATE** 11/2/04

ADDRESS 1150 PINCH VALLEY RD.

CITY WESTMINSTER **STATE** MD **ZIP** 21158

I/We wish to comment or inquire about the following aspects of this project:

We frequently travel into Westminster from our home (at least once a day) and try to avoid the rush hour traffic heading West towards our home off of Hughes Shop Rd - where we turn to go to our home. You have developed all these elaborate + expensive plans but has any one thought about the huge gridlock (at Rt. 97 towards the airport Rt. 31 + the light at the Best Western Hotel?) - that would occur when the traffic moves through quickly then comes to a complete stop - which happens now! This would also happen at the other end of town after you pass

☑ **Please add my/our name(s) to the Mailing list.** Malcolm Drive

☐ **Please delete my/our name(s) to the Mailing list.**

* **Persons who have received a copy of this brochure through the mail are already on the project Mailing List.**

Traffic already backs up from the Best Western Hotel to Rt. 97 [illegible]

M

Robert L. Ehrlich, Jr., *Governor*
Michael S. Steele, *Lt. Governor*

SHA State Highway Administration — Drive to Excel

Robert L. Flanagan, *Secretary*
Neil J. Pedersen, *Administrator*

Maryland Department of Transportation

December 9, 2004

Mr. Scott Fisher
19 Hahn Road
Westminster MD 21157

Dear Mr. Fisher:

Thank you for your interest in the MD 140 Transportation Improvement Study in Carroll County. The State Highway Administration (SHA) appreciates your concerns regarding bicyclist and pedestrian safety and traffic through Westminster. Your support of Alternate 5 has been noted. Your comments will be included in the official Public Hearing record.

We have noted your concerns about bicyclist and pedestrian safety along MD 140. It is SHA's objective to provide a safe highway system for all of our customers, whether they are drivers, bicyclists, or pedestrians. All of the proposed alternates provide five foot sidewalks and pedestrian crossings. The outside lanes of the at-grade alternates (Alternate 2 and Alternate 7) and the outside service lanes of the grade separated alternates (Alternate 5 and Alternate 6) will be 16 feet wide to accommodate on road bicyclists.

Again, thank you for your interest in the MD 140 Transportation Improvement Study. If you have any questions, please contact the project manager, Ms. Carmeletta T. Harris at 410-545-8522 or the project engineer, Mr. Michael Holmes, at 410-545-8509. They can also be reached at 1-800-548-5026 and via email respectively at charris@sha.state.md.us and mholmes1@sha.state.md.ns.

Very truly yours,

Cynthia D. Simpson
Deputy Director
Office of Planning and
Preliminary Engineering

By _____
Carmeletta T. Harris
Project Manager
Project Planning Division

cc: Ms. Pat Greene, Environmental Manager, State Highway Administration w/incoming

My telephone number/toll-free number is _____
Maryland Relay Service for Impaired Hearing or Speech 1.800.735.2258 Statewide Toll Free

Street Address: 707 North Calvert Street • Baltimore, Maryland 21202 • *Phone* 410.545.0300 • www.marylandroads.com

STATE HIGHWAY ADMINISTRATION
QUESTIONS AND/OR COMMENTS

CL702A11
LOCATION/DESIGN PUBLIC HEARING

MD 140 TRANSPORTATION IMPROVEMENT STUDY
FROM MARKET STREET TO SULLIVAN ROAD

TUESDAY, OCTOBER 26, 2004
5:30 P.M. - 8:30 P.M.

HENRY C. EVANS ARMORY
350 HAHN ROAD
WESTMINSTER, MD 21157

PLEASE PRINT

NAME Scott Fisher **DATE** 10.11.04

ADDRESS 19 HAHN Rd

CITY Westminster **STATE** MD **ZIP** 21157

I/We wish to comment or inquire about the following aspects of this project:

Proposed alternate 5 seems to be the long term fix in my opinion. Bicycles and Pedestrians should be put on the back burner list. Could make some kind of lane or sidewalk on the bridges for them to cross on.

☐ **Please add my/our name(s) to the Mailing list.**

☐ **Please delete my/our name(s) to the Mailing list.**

*** Persons who have received a copy of this brochure through the mail are already on the project Mailing List.**

Robert L. Ehrlich, Jr., *Governor*
Michael S. Steele, *Lt. Governor*

SHA State Highway Administration

Robert L. Flanagan, *Secretary*
Neil J. Pedersen, *Administrator*

Maryland Department of Transportation

December 9, 2004

Mr. Kevin Beaver
305 Avalon Lane
Westminster MD 21158

Dear Mr. Beaver:

Thank you for your interest in the MD 140 Transportation Improvement Study in Carroll County. The State Highway Administration (SHA) appreciates your concerns regarding bicyclist safety and traffic through Westminster. Your support of Alternate 5 has been noted. Your comments will be included in the official Public Hearing record.

A bypass had been studied in the past, but was dropped during the late 1990's from the Consolidated Transportation Program due to the Smart Growth legislation. Previous studies have shown that even with a bypass, there would still be a need to improve MD 140. The MD 140 Transportation Improvement Study is separate from the previous Westminster Bypass Study.

We have noted your concerns about bicyclist safety along MD 140. It is SHA's objective to provide a safe highway system for all of our customers, whether they are drivers, bicyclists, or pedestrians. All of the proposed alternates provide five foot sidewalks and pedestrian crossings. The outside lanes of the at-grade alternates (Alternate 2 and Alternate 7) and the outside service lanes of the grade separated alternates (Alternate 5 and Alternate 6) will be 16 feet wide to accommodate on road bicyclists.

My telephone number/toll-free number is _____
Maryland Relay Service for Impaired Hearing or Speech 1.800.735.2258 Statewide Toll Free

Street Address: 707 North Calvert Street • Baltimore, Maryland 21202 • *Phone* 410.545.0300 • www.marylandroads.com

Again, thank you for your interest in the MD 140 Transportation Improvement Study. If you have any questions, please contact the project manager, Ms. Carmeletta T. Harris at 410-545-8522 or the project engineer, Mr. Michael Holmes, at 410-545-8509. They can also be reached at 1-800-548-5026 and via email respectively at charris@sha.state.md.us and mholmes1@sha.state.md.us.

Very truly yours,

Cynthia D. Simpson
Deputy Director
Office of Planning and
Preliminary Engineering

By: _____
Carmeletta T. Harris
Project Manager
Project Planning Division

cc: Ms. Pat Greene, Environmental Manager, State Highway Administration (w/incoming)
Mr. Ray Moravec, URS (w/incoming)

STATE HIGHWAY ADMINISTRATION
QUESTIONS AND/OR COMMENTS

CL702A11
LOCATION/DESIGN PUBLIC HEARING

MD 140 (WESTMINSTER)
FROM MARKET STREET TO SULLIVAN ROAD

TUESDAY, OCTOBER 26, 2004, 5:30 P.M.
HENRY C. EVANS ARMORY
350 HAHN ROAD
WESTMINSTER, MD 21157

PLEASE PRINT

NAME Kevin Beaver DATE 10/26/04

ADDRESS 305 Avalon Lane

CITY Westminster STATE Md ZIP 21158

I/We wish to comment or inquire about the following aspects of this project:

1) ~~Please~~ The only viable long term option presented here today would be #3. However, I believe the $230 million would be better spent by building a bypass around RT 140 instead. Land around this new road could be used to create limited access Industrial Parks that the county desperately needs. Money from these parks might even help fund the by-pass Fewer business etc would be disturbed.

2) Bike usage on Rt 140 w/o a by-pass would be suicidal.

☐ Please add my/our name(s) to the Mailing List.*

☐ Please delete my/our name(s) from the Mailing List.

* Persons who have received a copy of this brochure through the mail are already on the project Mailing List

Robert L. Ehrlich, Jr., *Governor*
Michael S. Steele, *Lt. Governor*

SHA State Highway Administration — Drive to Excel

Robert L. Flanagan, *Secretary*
Neil J. Pedersen, *Administrator*

Maryland Department of Transportation

December 9, 2004

Mr. James E. Harris
1176 Brehm Road
Westminster MD 21157

Dear Mr. Harris:

Thank you for your interest in the MD 140 Transportation Improvement Study in Carroll County. The State Highway Administration (SHA) appreciates your concerns regarding traffic through Westminster. Your opposition to a bypass has been noted. Your comments will be included in the official Public Hearing record.

A bypass had been studied in the past, but was dropped during the late 1990's from the Consolidated Transportation Program due to the Smart Growth legislation. Previous studies have shown that even with a bypass, there would still be a need to improve MD 140. The MD 140 Transportation Improvement Study is separate from the previous Westminster Bypass Study.

Again, thank you for your interest in the MD 140 Transportation Improvement Study. If you have any questions, please contact the project manager, Ms. Carmeletta T. Harris at 410-545-8522 or the project engineer, Mr. Michael Holmes, at 410-545-8509. They can also be reached at 1-800-548-5026 and via email respectively at charris@sha.state.md.us and mholmes1@sha.state.md.us.

Very truly yours,

Cynthia D. Simpson
Deputy Director
Office of Planning and
~~Preliminary~~ Engineering

By: _____
Carmeletta T. Harris
Project Manager
Project Planning Division

cc: Ms. Pat Greene, Environmental Manager, State Highway Administration (w/incoming)
Mr. Ray Moravec, URS (w/incoming)

My telephone number/toll-free number is _____
Maryland Relay Service for Impaired Hearing or Speech 1.800.735.2258 Statewide Toll Free

Street Address: 707 North Calvert Street • Baltimore, Maryland 21202 • *Phone* 410.545.0300 • www.marylandroads.com

STATE HIGHWAY ADMINISTRATION
QUESTIONS AND/OR COMMENTS

CL702A11
LOCATION/DESIGN PUBLIC HEARING

MD 140 (WESTMINSTER)
FROM MARKET STREET TO SULLIVAN ROAD

TUESDAY, OCTOBER 26, 2004, 5:30 P.M.
HENRY C. EVANS ARMORY
350 HAHN ROAD
WESTMINSTER, MD 21157

PLEASE PRINT

NAME James E Harris DATE 10-26-04

ADDRESS 1176 Brehm Rd

CITY Westminster STATE MD ZIP 21157

I/We wish to comment or inquire about the following aspects of this project:

I keep hearing the chamber who only represents a small portion of the business community (Appx 35%). They are deeply divided over this issue with only about 40% of the Chamber members support the Bypass. That they keep pushing for. The large businesses do not want the traffic moved from in front of their properties. Examples are Carroll Every Mall and the Cadillac dealership who do not care moved to a Bypass. Because of what you hear and investigate for ther

☑ Please add my/our name(s) to the Mailing List.*

☐ Please delete my/our name(s) from the Mailing List.

* Persons who have received a copy of this brochure through the mail are already on the project Mailing List

Robert L. Ehrlich, Jr., *Governor*
Michael S. Steele, *Lt. Governor*

SHA State Highway Administration — Driven to Excel

Robert L. Flanagan, *Secretary*
Neil J. Pedersen, *Administrator*

Maryland Department of Transportation

December 9, 2004

Ms. Inna Coleman
1109 Chandler Drive
Westminster MD 21157

Dear Ms. Coleman:

Thank you for your interest in the MD 140 Transportation Improvement Study in Carroll County. The State Highway Administration (SHA) appreciates your concerns regarding traffic through Westminster. Your support of Alternate 2 has been noted. Your comments will be included in the official Public Hearing record.

Currently, there are no studies involving the extension of I-795 or building a bypass around the Westminster area. Previous studies have shown that even with a bypass, there would still be a need to improve MD 140. A bypass had been studied in the past, but was dropped during the late 1990's from the Consolidated Transportation Program due to the Smart Growth legislation. The MD 140 Transportation Improvement Study is separate from the previous Westminster Bypass Study.

Again, thank you for your interest in the MD 140 Transportation Improvement Study. If you have any questions, please contact the project manager, Ms. Carmeletta T. Harris at 410-545-8522 or the project engineer, Mr. Michael Holmes, at 410-545-8509. They can also be reached at 1-800-548-5026 and via email respectively at charris@sha.state.md.us and mholmes1@sha.state.md.us.

Very truly yours,

Cynthia D. Simpson
Deputy Director
Office of Planning and
Preliminary Engineering

By: _____
Carmeletta T. Harris
Project Manager
Project Planning Division

cc: Ms. Pat Greene, Environmental Manager, State Highway Administration w/incoming
Mr. Ray Moravec, URS (w/incoming)

My telephone number/toll-free number is _____
Maryland Relay Service for Impaired Hearing or Speech 1.800.735.2258 Statewide Toll Free

Street Address: 707 North Calvert Street • Baltimore, Maryland 21202 • *Phone* 410.545.0300 • www.marylandroads.com

Inna Coleman
1190 Chandler Drive
Westminster, MD 21157
November 1, 2004

Attn Carmen Harris
Maryland Department of Transportation
State Highway Administration

Philosophically, it is hard to build, but it is easy to destroy, and it will be impossible to resurrect the Westminster we all grew to love after the selected project is complete. If it is impossible to return back to the drawing table to create the best solution, the Route 140 bypass, then alternative #2 is the least harmful of all the proposed options. Do we have to waste hundreds of millions of dollars for now reason? Is it possible to look wider at the real problem?

The major traffic flow is going from point A to point Z passing through Westminster. The destination for most people is 795. Would it be better to put a new, and wider road north of 140, to combine bypass solution with easing traffic on 140 toward 795? There is a constant traffic accumulation several miles before 91, in both directions. Something needs to be done there also.
Should 140 be turned into a parking lot with an ugly bridge over 97, or is it possible to leave Westminster and Finksburg alone and preserving their look by redirecting the commuter traffic to a bigger and less congested route?

Thank you,

Inna Coleman

I Coleman

Robert L. Ehrlich, Jr., *Governor*
Michael S. Steele, *Lt. Governor*

SHA State Highway Administration — Drive to End

Robert L. Flanagan, *Secretary*
Neil J. Pedersen, *Administrator*

Maryland Department of Transportation

December 9, 2004

Mr. & Mrs. H.L. Cavey, Jr.
3410 Old Hanover Road
Westminster MD 21158

Dear Mr. & Mrs. Cavey:

Thank you for your interest in the MD 140 Transportation Improvement Study in Carroll County. The State Highway Administration (SHA) appreciates your concerns regarding traffic through Westminster. Your comments will be included in the official Public Hearing record.

Currently, the traffic flow on MD 140 between Market Street and Sullivan Avenue has been operating at acceptable levels. However, traffic models indicate that the intersections within the study area will have a failing Level of Service (LOS of F) by the year 2025. The LOS is determined based on the number of vehicles using an intersection. The LOS is similar to a child's report card; a LOS of "A" represents excellent operating conditions, while a LOS of "F" indicates that there is significant congestion.

Again, thank you for your interest in the MD 140 Transportation Improvement Study. You have been added to the project mailing list. If you have any questions, please contact the project manager, Ms. Carmeletta T. Harris at 410-545-8522 or the project engineer, Mr. Michael Holmes, at 410-545-8509. They can also be reached at 1-800-548-5026 and via email respectively at charris@sha.state.md.us and mholmes1@sha.state.md.us.

Very truly yours,

Cynthia D. Simpson
Deputy Director
Office of Planning and
Preliminary Engineering

By: _____
Carmeletta T. Harris
Project Manager
Project Planning Division

cc: Ms. Pat Greene, Environmental Manager, State Highway Administration w/incoming
Mr. Ray Moravec, URS (w/incoming)

My telephone number/toll-free number is _____
Maryland Relay Service for Impaired Hearing or Speech 1.800.735.2258 Statewide Toll Free

Street Address: 707 North Calvert Street • Baltimore, Maryland 21202 • *Phone* 410.545.0300 • www.marylandroads.com

STATE HIGHWAY ADMINISTRATION
QUESTIONS AND/OR COMMENTS

CL702A11
LOCATION/DESIGN PUBLIC HEARING

MD 140 TRANSPORTATION IMPROVEMENT STUDY
FROM MARKET STREET TO SULLIVAN ROAD

TUESDAY, OCTOBER 26, 2004
5:30 P.M. - 8:30 P.M.

HENRY C. EVANS ARMORY
350 HAHN ROAD
WESTMINSTER, MD 21157

PLEASE PRINT

NAME Mr. + Mrs. H. L. Cavey Jr. **DATE** 11/2/04

ADDRESS 3410 Old Hanover Rd.

CITY Westminster **STATE** Md **ZIP** 21158

I/We wish to comment or inquire about the following aspects of this project:

Any future additional information about this project and any updates to these proposals.

Thank you

☑ **Please add my/our name(s) to the Mailing list.**

☐ **Please delete my/our name(s) to the Mailing list.**

*** Persons who have received a copy of this brochure through the mail are already on the project Mailing List.**

Robert L. Ehrlich, Jr., *Governor*
Michael S. Steele, *Lt. Governor*

SHA State Highway Administration — Drive to Zero!

Robert L. Flanagan, *Secretary*
Neil J. Pedersen, *Administrator*

Maryland Department of Transportation

December 9, 2004

ESPAN Properties, LLC
P.O. Box 468
Reisterstown MD 21136

Dear ESPAN Property Owner:

Thank you for your interest in the MD 140 Transportation Improvement Study in Carroll County. The State Highway Administration (SHA) appreciates your concerns regarding traffic trough Westminster. Your support of the Single Point Urban Interchange, Alternate 5 has been noted. Your comments will be included in the official Public Hearing record.

Currently, the traffic flow on MD 140 between Market Street and Sullivan Avenue has been operating at acceptable levels. However, traffic models indicate that the intersections within the study area will have a failing Level of Service (LOS of F) by the year 2025. The LOS is determined based on the number of vehicles using an intersection. The LOS is similar to a child's report card; a LOS of "A" represents excellent operating conditions, while a LOS of "F" indicates that there is significant congestion.

Again, thank you for your interest in the MD 140 Transportation Improvement Study. If you have any questions, please contact the project manager, Ms. Carmeletta T. Harris at 410-545-8522 or the project engineer, Mr. Michael Holmes, at 410-545-8509. They can also be reached at 1-800-548-5026 and via email respectively at charris@sha.state.md.us and mholmes1@sha.state.md.us.

Very truly yours,

Cynthia D. Simpson
Deputy Director
Office of Planning and
Preliminary Engineering

By: _____
Carmeletta T. Harris
Project Manager
Project Planning Division

cc: Ms. Pat Greene, Environmental Manager, State Highway Administration w/incoming
Mr. Ray Moravec, URS, (w/incoming)

STATE HIGHWAY ADMINISTRATION
QUESTIONS AND/OR COMMENTS

CL702A11
LOCATION/DESIGN PUBLIC HEARING

MD 140 TRANSPORTATION IMPROVEMENT STUDY
FROM MARKET STREET TO SULLIVAN ROAD

TUESDAY, OCTOBER 26, 2004
5:30 P.M. - 8:30 P.M.

HENRY C. EVANS ARMORY
350 HAHN ROAD
WESTMINSTER, MD 21157

PLEASE PRINT

NAME ESPAU Properties, LLC **DATE** 10/7/04

ADDRESS PO Box 468

CITY Reisterstown **STATE** MD **ZIP** 21136

I/We wish to comment or inquire about the following aspects of this project:

The movement of traffic through Westminster is of special concern, especially in morning and evening hours of work traffic. I believe that, although more expensive, Alternate (5) is the most rational long-term solution, given the continuing population growth west of Town.

Thanks —

☐ **Please add my/our name(s) to the Mailing list.**

☐ **Please delete my/our name(s) to the Mailing list.**

*** Persons who have received a copy of this brochure through the mail are already on the project Mailing List.**

Robert L. Ehrlich, Jr., *Governor*
Michael S. Steele, *Lt. Governor*

SHA State Highway Administration — Driven to Excel

Robert L. Flanagan, *Secretary*
Neil J. Pedersen, *Administrator*

Maryland Department of Transportation

December 9, 2004

Ms. Bonnie Grady
Carroll County Chamber of Commerce
700 Corporate Center Court, Suite L
P.O. Box 871
Westminster MD 21158

Dear Ms. Grady:

Thank you for your interest in the MD 140 Transportation Improvement Study in Carroll County. The State Highway Administration (SHA) appreciates your concerns regarding traffic movements in the Westminster area. Your support of Alternate 2 – TSM/TDM and your opposition to Alternate 5 and Alternate 6 have been noted. Your comments along with this background material that you provided will be included in the official Public Hearing record.

As you noted, a bypass had been studied in the past, but was dropped during the late 1990's from the Consolidated Transportation Program due to the Smart Growth legislation. The MD 140 Transportation Improvement Study is separate from the previous Westminster Bypass Study.

Again, thank you for your interest in the MD 140 Transportation Improvement Study. If you have any questions, please contact the project manager, Ms. Carmeletta T. Harris at 410-545-8522 or the project engineer, Mr. Michael Holmes, at 410-545-8509. They can also be reached at 1-800-548-5026 and via email respectively at charris@sha.state.md.us and mholmes1@sha.state.md.us.

Very truly yours,

Cynthia D. Simpson
Deputy Director
Office of Planning and
Preliminary Engineering

By: _____
Carmeletta T. Harris
Project Manager
Project Planning Division

My telephone number/toll-free number is _____
Maryland Relay Service for Impaired Hearing or Speech 1.800.735.2258 Statewide Toll Free

Street Address: 707 North Calvert Street • Baltimore, Maryland 21202 • *Phone* 410.545.0300 • www.marylandroads.com

cc: Ms. Pat Greene, Environmental Manager, State Highway Administration (w/incoming)
Mr. Ray Moravec, URS (w/incoming)

CARROLL COUNTY
CHAMBER OF COMMERCE

Public Hearing Statement
MD 140 Improvement Study
October 26, 2004

I am Bonnie Grady, President and CEO of the Carroll County Chamber of Commerce.

As the State Highway Administration is well aware, the Carroll County Chamber of Commerce strongly supports Alternate 2, which completes long planned improvements in the final phase of Alternate 2.

The Chamber vehemently opposes alternate 5 and alternate 6 or any variation of alternates designed to handle all of the projected future traffic volumes on Baltimore Boulevard (***existing*** Md. 140), in the absence of a bypass.

The Chamber has made its position and the reasons for its position known to the Delegation, the County Commissioners, and the City of Westminster as well as to the State Highway Administration. On behalf of the Chamber I appear here tonight to reaffirm that position for the Hearing record.

I am providing for your Hearing record, a copy of the Carroll County Chamber's official position statement, along with a copy of the Chronology of Planning for MD 140 developed by our Transportation Committee. I respectfully ask that you make these a part of your Hearing record and give our concerns and our position serious and careful consideration in making final decisions in this matter.

Attachments:
Position Statement (MD Rt. 140 & Westminster Bypass) 9/10/04
Chronology of Planning for MD 140 & Westminster Bypass 9/04

700 Corporate Center Court, Suite L, • P.O. Box 871 • Westminster, Maryland 21158
410-848-9050 • 410-876-7212 • Fax 410-876-1023 • www.carrollcountychamber.org

CARROLL COUNTY CHAMBER OF COMMERCE

Connecting our members

MISSION STATEMENT
The Carroll County Chamber of Commerce exists to promote a sound economic environment in which our business community can prosper.

2004 Chairman of the Board
H. Eugene Eyler
Westminster Union Bank

Chairman,
Transportation Committee
Edmund R. Cueman, APA

President/CEO
Bonnie J. Grady, IOM

MD ROUTE 140 and the WESTMINSTER BYPASS

As our community grows, our transportation system has to keep pace with land use. Otherwise, the community begins to suffer serious adversities, such as loss of industry and jobs, resulting from traffic congestion. The ability to move people, goods and services throughout the community is comprised. This is not a new concept.

Formal plans were in place to provide for adequate transportation in the Westminster area, dating as far back as 1962. These plans were synchronized with land use planning and zoning. They included a provision for additional highway capacity in the form of a Westminster Bypass.

In 1999, the State deleted the Westminster Bypass from its program. In 2001, the County removed the project from its Master Plan. Notwithstanding these actions, the Carroll County Chamber of Commerce steadfastly continues to support the construction of a Westminster Bypass, a position it has held for forty years.

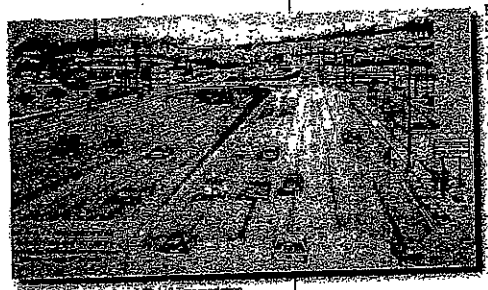

SHA artist conception from MD 140 Transportation Improvement Study. MD 140 at Center Street facing East.

Existing MD 140, which has just been rebuilt, cannot handle the State Highway Administration (SHA) forecasted traffic volumes. These volumes, long planned to be handled by the Westminster Bypass, will have to be accommodated on existing MD 140 meaning that the road will have to be reconstructed into a super-highway.

The adverse implications of what this super-highway will do to the community and the businesses along existing MD 140 are of serious concern.

As a result, the Chamber has raised this issue with the Carroll County Commissioners and urged them to officially join with the City of Westminster in restoring the previously studied SHA alignment for a Westminster Bypass on the County Master Plan.

The implications of the Commissioners not taking this action, as the Chamber sees it, are:

- Any chance for a future bypass will be pre-empted.
- The physically open corridor, protected for forty-two years, will close forever as development occurs.
- That result will ultimately deliver, by default, an Alternate 5, 6 or 7 type road facility, as proposed by the SHA.

This means tearing apart the existing MD 140 as we know it today, and building a super-highway to handle the 78,000 vehicles per day that will be relegated to the existing corridor. In doing so, the business community and economic base along existing MD 140 will be severely and adversely impacted. The City, the entire Westminster community and the County will all suffer as a result, both during and after construction.

Call to Action

The Board of Directors of the Carroll County Chamber of Commerce urges all local residents and businesses to get involved in this important issue. Educate yourself about the proposed alternatives. Weigh the effects of the proposed actions on the future of our community and our quality of life. Decide how you want Westminster to look in the future. Then make your voices heard. Support Alternate 2 of the proposed MD 140 Transportation Improvement Study along with the reinstatement of the Westminster Bypass on County and State plans. It is imperative to maintain the ability to move people, goods and services throughout our community or our quality of life and business will be compromised.

September 10, 2004

Carroll County Chamber of Commerce
P. O. Box 871
Westminster, MD 21158
410-848-9050
info@carrollcountychamber.org
www.carrollcountychamber.org

CHRONOLOGY OF PLANNING FOR THE MD 140 WESTMINSTER BYPASS

To provide a context for the situation we face today, the following time frames and happenings have been listed. These were initially prepared for the Chamber of Commerce's Transportation Committee on which I serve. These are not all-inclusive as I'm sure other significant happenings could have been listed. However, I think those cited below are indicative of the fact that it if there is any chance of saving the Westminster Bypass corridor, it must happen very, very soon or this long protected corridor will close and be gone forever. If that happens the City, the community at large and the entire County will suffer greatly and rue the day the county could not bring itself to do what it had to do. *Edmund R. Cueman, Chairman, Transportation Committee, Carroll County Chamber of Commerce*

Circa 1955 A "Md 140 Bypass" is constructed to relieve traffic on Main Street in Westminster. Access onto the Bypass is not restricted, i.e. it is not built as a "limited access highway".

1959 formal County Planning and Zoning begins in Carroll County with the formation of a County Planning and Zoning Commission by the County Commissioners.

1960 the County Planning Director on behalf of the Planning Commission and County Commissioners urges State to purchase access controls along the Md 140 Bypass. The request was unsuccessful. Development along corridor begins to take place.

1962 Carroll County and State Roads Commission recognize need for a future "***limited access***" Bypass north of Westminster. A "limited access" highway is planned by the State and incorporated on the County's adopted Major Road Plan, knowing the existing the Md 140 Bypass will ultimately become a "business boulevard" in the absence of "access controls".

The **1964** Carroll County Master (Land Use) Plan is adopted. It recognizes the existing Westminster Bypass will inevitably become a "business boulevard". The Land Use Plan provides business and industrial land use designations along the highway. These and other planned land use designations were predicated on the ability to construct a future limited access Md 140 Bypass as shown on the County Road Plan and Master Plan (Land Use) Plan.

1965 Comprehensive zoning is adopted county-wide in accordance with the adopted County Master Plan. Business and industrial zoning districts are created along or near the existing Md 140 Bypass corridor to enable business and industrial enterprises to develop according to the Plan.

1965-1984 Development occurs and continues according to plan. The existing Md. 140 Bypass becomes a significant business boulevard. The planned future Md. 140 Bypass corridor remains open but a more detailed location of this planned future limited access Bypass is needed, as development activity in proximity of the alignment increases. In the early 1980's, the County Commissioners retain The Wilson T. Ballard, Co., an engineering firm to more precisely detail the location of the future highway as part of Westminster and Environs Comprehensive Plan studies underway jointly by County and City.

The **1985** Westminster and Environs Comprehensive Plan is adopted by both the County and City with the Bypass corridor clearly delineated on detailed drawings. A corridor preservation program is instituted by the Commissioners to protect the corridor from development, and to compensate any landowner requesting to be relieved of his or her land within the corridor. Development continues throughout the planning area in accordance with the 1985 Westminster Comprehensive Master Plan which like the 1964 Plan is predicated on construction of a future Westminster bypass.

1986-1992 State Highway Administrators repeatedly commend the County Commissioners for their highway corridor preservation efforts and hold Carroll County up as an example to other jurisdictions. Portions of properties in the path of the future Md. 140 Bypass are purchased by the county only when requested by an affected property owner.

1992 The State Highway Administration undertakes detailed alternative location studies for the long planned future Md 140 Westminster Bypass in accordance with a required federal process.

1997 State Highway Administration nears completion of its 5 year study on alternative alignments for a future Westminster Bypass via the Federally mandated process. The State seeks Federal approval of Alternate 4 modified for the Westminster Bypass corridor and concurrently seeks approval of Alternate 2 (Revised) for improving existing Md. 140 according to plan.

"The reasons for these selections are: The traffic analysis indicates that improvements to the existing road are necessary even if a bypass is built by year 2015. With Alternate 2 (Revised), if no bypass is built, several (existing Md 140)intersections will reach capacity by the design year, 2015. The focus group (operating at that time) concluded that the maximum (improvements) that could be made to the existing Md. 140 while keeping business impacts down to an acceptable level, would be to the extent of what is proposed under Alternate 2 (Revised)". **(source: SHA report March 18, 1997).**

The Report also states: **"Considering the higher cost of a Bypass, it will be several years before a bypass could be built. Although interim improvements will be made in the near future, those alone would not be able to handle the future traffic volumes projected for the existing road. Even with a bypass there will be more than a 25% increase in traffic volumes on the existing road. Therefore, Alternate 2 (Revised) is recommended for improving the existing road, until a bypass could be built."** (source; SHA re March 18, 1997).

As a result, Federal Approval of Alternate 2 improvements to existing Md 140 is received by the State but approval of Alternate 4 modified for the planned Westminster Bypass is held in abeyance pending further environmental study. Alternate 4 studies continue. Construction subsequently begins on existing Md 140 with the selected Alternate 2 improvements.

1997-1998 County Commissioners develop a *reluctance* to spend previously appropriated funds for corridor preservation thereby negatively effecting eligible property owners seeking resolution.

1999 Governer Glendening under the guise of Smart Growth, arbitrarily kills the Md 140 Bypass project which terminates the State Highway Administrations efforts in seeking federal approval of Alternate 4 modified for the Westminster Bypass. As a result the State Highway Administration has to form another new Focus Group to study the "now what" and to determine remaining alternatives for handling all the projected traffic.

1999-2000 County Commissioners curtail utilizing appropriated funds for compensating eligible landowners within the future Bypass corridor. A "due process issue" results in 2000. Rather than compensate the land owner, the County Commissioners "... direct that the Westminster Bypass alignment be removed from the property at issue during the Westminster Comprehensive Plan update process," the Board having decided not to acquire the property.

2001 With the update process still not complete, the property owner files suit against the County in Circuit Court. The case does not reach trial as the Commissioners act to officially remove a portion of the Bypass from the 1985 Westminster & Environs Comprehensive Plan and the litigant's property-- despite the written and verbal pleas of the City of Westminster and others not to do so, until there is an alternative plan.

2003 A new County Commissioner Board inherits a broken Bypass corridor and removes the remaining portion of the Bypass from official Plan. The State begins conducting public information meetings on the results of the Focus Group studies. The results of these studies serve as a wake-up call: The Carroll County Chamber of Commerce and others take a position in reaffirming their long standing support of completing the Alternate 2 improvements and a Md 140 Bypass, in lieu of desecrating the existing Md. 140 and the business community along the boulevard by constructing a super highway. The County Delegation asks the SHA to reconsider the need for the Bypass and meets with the County Commissioners, Mayor and Council of Westminster and SHA officials. It is made clear that it is imperative for the County and City to be on the same page.

2004 the City of Westminster reviews, updates and adopts its Comprehensive Plan and reaffirms on its official Plan, inclusion of the Westminster Bypass corridor (State's Alternate 4 modified). The Carroll County Chamber of Commerce which has historically supported the future Westminster By Pass, supports the City in its doing so, and continues its efforts toward getting the County Commissioners to do likewise by restoring the same corridor to the County's official Plan which is now under review. **Meanwhile the State Highway Administration will hold a Public Hearing in Westminster on Tuesday, October 26, 2004, on several alternates for Existing Md. 140 (exhibits available for viewing 5:30 P.M. to 7:00P.M.; hearing at 7:00 P.M.).**

Decisions made by the State based on its studies, the Hearing record, and the official positions of the City, County, and Delegation will ultimately determine how and by what means the projected inevitable traffic volumes will be handled. This may be the single most important and far reaching decision ever affecting the future of the City of Westminster, the entire Westminster community and the County itself.

Robert L. Ehrlich, Jr., *Governor*
Michael S. Steele, *Lt. Governor*

SHA State Highway Administration — Drive to Excel

Robert L. Flanagan, *Secretary*
Neil J. Pedersen, *Administrator*

Maryland Department of Transportation

December 9, 2004

Mr. Charles W. Call
50 Blue Swallow Court
Westminster MD 21158

Dear Mr. Call:

Thank you for your interest in the MD 140 Transportation Improvement Study in Carroll County. The State Highway Administration (SHA) appreciates your concerns regarding public schools. Your support of Alternate 1 – No Build has been noted. Your comments will be included in the official Public Hearing record.

Your concern about school funding is important. But that is a separate issue from transportation funding. In terms of funding school programs instead of improvements on MD 140, funding for roadway improvements comes primarily from Maryland's Transportation Trust Fund (TTF). The TTF was established as a dedicated fund to support Maryland's transportation and infrastructure needs. This money, in turn, derives primarily from the tax that is part of the price of each gallon of gasoline that is sold in Maryland, as well as other highway user fees.

Currently, there are no studies involving the extension of I-795 or building a bypass around the Westminster area. Previous studies have shown that even with a bypass, there would still be a need to improve MD 140. A bypass had been studied in the past, but was dropped during the late 1990's from the Consolidated Transportation Program due to the Smart Growth legislation. The MD 140 Transportation Improvement Study is separate from the previous Westminster Bypass Study.

Again, thank you for your interest in the MD 140 Transportation Improvement Study. If you have any questions, please contact the project manager, Ms. Carmeletta T. Harris at 410-545-8522 or the project engineer, Mr. Michael Holmes, at 410-545-8509. They can also be reached at 1-800-548-5026 and via email respectively at charris@sha.state.md.us and mholmes1@sha.state.md.us.

Very truly yours,

Cynthia D. Simpson
Deputy Director
Office of Planning and
Preliminary Engineering

By: _____
Carmeletta T. Harris
Project Manager
Project Planning Division

cc: Ms. Pat Greene, Environmental Manager, State Highway Administration (w/incoming)
Mr. Ray Moravec, URS (w/incoming)

STATE HIGHWAY ADMINISTRATION
QUESTIONS AND/OR COMMENTS

CL702A11
LOCATION/DESIGN PUBLIC HEARING

MD 140 (WESTMINSTER)
FROM MARKET STREET TO SULLIVAN ROAD

TUESDAY, OCTOBER 26, 2004, 5:30 P.M.
HENRY C. EVANS ARMORY
350 HAHN ROAD
WESTMINSTER, MD 21157

PLEASE PRINT

NAME Charles W Cull DATE 11/22/04

ADDRESS #60 Blue Swallow Ct

CITY Westminster STATE Md ZIP 21158

I/We wish to comment or inquire about the following aspects of this project:

I think this expense far exceeds the benefit.

We should concentrate on improving all of the Bridge work, which is being done.

Develop the Limited Access By Pass for which a great deal of property has been acquired.

Any of these proposed funds should be diverted to our Public School System STATE Wide. Distribution could be based upon level of Competence within each System based on Test Scores Completed Annually.

Charles W Cull

☒ Please add my/our name(s) to the Mailing List.*

☐ Please delete my/our name(s) from the Mailing List.

* Persons who have received a copy of this brochure through the mail are already on the project Mailing List

Robert L. Ehrlich, Jr., *Governor*
Michael S. Steele, *Lt. Governor*

SHA State Highway Administration — Driven to Excel

Robert L. Flanagan, *Secretary*
Neil J. Pedersen, *Administrator*

Maryland Department of Transportation

December 9, 2004

Mr. and Mrs. Bill Zepp
106 N. Center Street
Westminster MD 21157

Dear Mr. & Mrs. Zepp:

Thank you for your interest in the MD 140 Transportation Improvement Study in Carroll County. The State Highway Administration (SHA) appreciates your concerns regarding pedestrian crossings. Your support of Alternate 1 – No Build has been noted. Your comments will be included in the official Public Hearing record.

Currently, there are no studies involving the extension of I-795 or building a bypass around the Westminster area. Previous studies have shown that even with a bypass, there would still be a need to improve MD 140. A bypass had been studied in the past, but was dropped during the late 1990's from the Consolidated Transportation Program due to the Smart Growth legislation. The MD 140 Transportation Improvement Study is separate from the previous Westminster Bypass Study.

We have noted your concerns about pedestrian and bicyclist safety along MD 140. It is SHA's objective to provide a safe highway system for all of our customers, whether they are drivers, bicyclists, or pedestrians. All of the proposed alternates provide five foot sidewalks and pedestrian crossings. The outside lanes of the at-grade alternates (Alternate 2 and Alternate 7) and the outside service lanes of the grade separated alternates (Alternate 5 and Alternate 6) will be 16 feet wide to accommodate on road bicyclists.

Again, thank you for your interest in the MD 140 Transportation Improvement Study. If you have any questions, please contact the project manager, Ms. Carmeletta T. Harris at 410-545-8522 or the project engineer, Mr. Michael Holmes, at 410-545-8509. They can also be reached at 1-800-548-5026 and via email respectively at charris@sha.state.md.us and mholmes1@sha.state.md.us.

Very truly yours,

Cynthia D. Simpson
Deputy Director
Office of Planning and
Preliminary Engineering

By: _____
Carmeletta T. Harris
Project Manager
Project Planning Division

cc: Ms. Pat Greene, Environmental Manager, State Highway Administration (w/incoming)
Mr. Ray Moravec, URS (w/incoming)

STATE HIGHWAY ADMINISTRATION
QUESTIONS AND/OR COMMENTS

CL702A11
LOCATION/DESIGN PUBLIC HEARING

MD 140 (WESTMINSTER)
FROM MARKET STREET TO SULLIVAN ROAD

TUESDAY, OCTOBER 26, 2004, 5:30 P.M.
HENRY C. EVANS ARMORY
350 HAHN ROAD
WESTMINSTER, MD 21157

PLEASE PRINT

NAME Bill & Barbara Zepp DATE Oct. 26, 2004

ADDRESS 106 N. Center St.

CITY Westminster STATE Md. ZIP 21157

I/We wish to comment or inquire about the following aspects of this project:

No improvements or change to Rt. 140 —
We do Need some predestrian walks at
2 or 3 major street intersections . . .
And We Need to put the By-pass back on
the burner. Suggest extending Rt. 795 to
Pennsylvania line — Then let PA take up
the headaches of extending it!

Note: The last thing Needed are sidewalks &
bike paths along a major highway —

☐ Please add my/our name(s) to the Mailing List.*

☐ Please delete my/our name(s) from the Mailing List.

* Persons who have received a copy of this brochure through the mail are already on the project Mailing List

Robert L. Ehrlich, Jr., *Governor*
Michael S. Steele, *Lt. Governor*

SHA State Highway Administration — Drive to Excel

Robert L. Flanagan, *Secretary*
Neil J. Pedersen, *Administrator*

Maryland Department of Transportation

December 9, 2004

Mr. Ben Perrieone
P.O. Box 1332
Westminster MD 21158

Dear Mr. Perrieone:

Thank you for your interest in the MD 140 Transportation Improvement Study in Carroll County. The State Highway Administration (SHA) appreciates your concerns regarding traffic through Westminster. Your support of Alternate 1, No-Build has been noted. Your comments will be included in the official Public Hearing record.

Currently, the traffic flow on MD 140 between Market Street and Sullivan Avenue has been operating at acceptable levels. However, traffic models indicate that the intersections within the study area will have a failing Level Of Service (LOS of F) by the year 2025. The LOS is determined based on the number of vehicles using an intersection. The LOS is similar to a child's report card; a LOS of "A" represents excellent operating conditions, while a LOS of "F" indicates that there is significant congestion.

While there may be other traffic issues in the area, this project team is currently identifying solutions to improve the MD 140 Corridor from Market Street to Sullivan Road. The limits were chosen to keep the project a manageable size and deal with traffic issues in the immediate Westminster area.

Again, thank you for your interest in the MD 140 Transportation Improvement Study. If you have any questions, please contact the project manager, Ms. Carmeletta T. Harris at 410-545-8522 or the project engineer, Mr. Michael Holmes, at 410-545-8509. They can also be reached at 1-800-548-5026 and via email respectively at charris@sha.state.md.us and mholmes1@sha.state.md.us.

Very truly yours,

Cynthia D. Simpson
Deputy Director
Office of Planning and
Preliminary Engineering

By: _____
Carmeletta T. Harris
Project Manager
Project Planning Division

cc: Ms. Pat Greene, Environmental Manager, State Highway Administration (w/incoming)
Mr. Ray Moravec, URS (w/incoming)

STATE HIGHWAY ADMINISTRATION
QUESTIONS AND/OR COMMENTS

CL702A11
LOCATION/DESIGN PUBLIC HEARING

MD 140 (WESTMINSTER)
FROM MARKET STREET TO SULLIVAN ROAD

TUESDAY, OCTOBER 26, 2004, 5:30 P.M.
HENRY C. EVANS ARMORY
350 HAHN ROAD
WESTMINSTER, MD 21157

PLEASE PRINT

NAME Ben Perriene DATE 10/26/04

ADDRESS PO Box 1332

CITY Westminster STATE md ZIP 21158

I/We wish to comment or inquire about the following aspects of this project:

I favor and strongly urge Alternate 1. The fact is only during Rush hour is traffic flow heavy. Even on weekends, no uncontrollable delays exist. Building a highway thru Westminster while leaving the entering portion of 140 and existing portion just 2 lanes leads one to wonder why the expense "racetrack" thru town.??

☐ Please add my/our name(s) to the Mailing List.*

☐ Please delete my/our name(s) from the Mailing List.

* Persons who have received a copy of this brochure through the mail are already on the project Mailing List

Robert L. Ehrlich, Jr., *Governor*
Michael S. Steele, *Lt. Governor*

SHA State Highway Administration — Driven to Excel

Robert L. Flanagan, *Secretary*
Neil J. Pedersen, *Administrator*

Maryland Department of Transportation

December 9, 2004

Ms. Elizabeth Drumgoole
BB&T Vice President
Regional Branch Operations Manager
45 West Main Street
Westminster MD 21157

Dear Ms. Drumgoole:

Thank you for your interest in the MD 140 Transportation Improvement Study in Carroll County. The State Highway Administration (SHA) appreciates your concerns regarding business impacts. Your support of Alternate 2 with a bypass has been noted. Your support of Alternate 7 without a bypass has also been noted. Your comments will be included in the official Public Hearing record.

A bypass had been studied in the past, but was dropped during the late 1990's from the Consolidated Transportation Program due to the Smart Growth legislation. The MD 140 Transportation Improvement Study is separate from the previous Westminster Bypass Study.

Again, thank you for your interest in the MD 140 Transportation Improvement Study. If you have any questions, please contact the project manager, Ms. Carmeletta T. Harris at 410-545-8522 or the project engineer, Mr. Michael Holmes, at 410-545-8509. They can also be reached at 1-800-548-5026 and via email respectively at charris@sha.state.md.us and mholmes1@sha.state.md.us.

Very truly yours,

Cynthia D. Simpson
Deputy Director
Office of Planning and
Preliminary Engineering

By: _____
Carmeletta T. Harris
Project Manager
Project Planning Division

cc: Ms. Pat Greene, Environmental Manager, State Highway Administration (w/incoming)
Mr. Ray Moravec, URS (w/incoming)

STATE HIGHWAY ADMINISTRATION
QUESTIONS AND/OR COMMENTS

CL702A11
LOCATION/DESIGN PUBLIC HEARING

MD 140 (WESTMINSTER)
FROM MARKET STREET TO SULLIVAN ROAD

TUESDAY, OCTOBER 26, 2004, 5:30 P.M.
HENRY C. EVANS ARMORY
350 HAHN ROAD
WESTMINSTER, MD 21157

PLEASE PRINT

NAME BB&T / Elizabeth Drumgoole DATE 10/27/2004

ADDRESS English Road & 140

CITY Westminster STATE MD ZIP 21157

I/We wish to comment or inquire about the following aspects of this project:

The preference for greatest positive impact and least negative impact would be alternate 2 with a bypass. Please consider planning for that in the future. In lieu of that, please consider our recommendation as alternate 1.
BB&T is already on the mailing list and a member of the Chamber of Commerce.

Elizabeth A. Drumgoole - Regional Branch Operations Vice President Manager
BB&T
45 West Main Street
Westminster MD 21157
410-857-3455

☐ Please add my/our name(s) to the Mailing List.*

☐ Please delete my/our name(s) from the Mailing List.

* Persons who have received a copy of this brochure through the mail are already on the project Mailing List

Robert L. Ehrlich, Jr., *Governor*
Michael S. Steele, *Lt. Governor*

SHA State Highway Administration — Driven to Excel

Robert L. Flanagan, *Secretary*
Neil J. Pedersen, *Administrator*

Maryland Department of Transportation

December 8, 2004

Mr. Bucky Edgett
Mrs. Dolores Maminski
663 Lake Drive
Westminster MD 21158

Dear Mr. Edgett & Mrs. Maminski:

Thank you for your interest in the MD 140 Transportation Improvement Study in Carroll County. The State Highway Administration (SHA) appreciates your concerns regarding this study. Your roadway improvement suggestions have been noted and will be included in the official Public Hearing record.

Your suggestion to use the outer most lanes on MD 140 as service roads has been incorporated in the Alternate 5 – Single Point Urban Interchange (SPUI) proposal. With this alternate, the inner most lanes would be depressed under the intersections at Englar Road, Center Street, and Malcolm Drive. Off and on ramps would be provided to allow access to and from these intersections. The through traffic would continue without stopping at traffic lights. Alternate 5 incorporates a system of one-way service roads to separate through traffic and local traffic traveling to the properties along MD 140 between Malcolm Drive and Center Street.

Alternate 6, the Half Bridge Alternate, is similar to the SPUI. Under this alternate, only the westbound MD 140 lanes would be depressed under Malcolm Drive and Center Street, while the eastbound lanes would be depressed under Englar Road. A service road would be used between Center Street and Malcolm Drive

Again, thank you for your interest in the MD 140 Transportation Improvement Study. If you have any questions, please contact the project manager, Ms. Carmeletta T. Harris at 410-545-8522 or the project engineer, Mr. Michael Holmes, at 410-545-8509. They can also be reached at 1-800-548-5026 and via email respectively at charris@sha.state.md.us and mholmes1@sha.state.md.us.

Very truly yours,

Cynthia D. Simpson
Deputy Director
Office of Planning and
Preliminary Engineering

By: _____
Carmeletta T. Harris
Project Manager
Project Planning Division

cc: Ms. Pat Greene, Environmental Manager, State Highway Administration (w/incoming)
Mr. Ray Moravec, URS (w/incoming)

From: Bucky Edgett <bucky@luckypro.com>
To: Carmen Harris <CHarris@sha.state.md.us>
Date: 09/12/2004 11:17:08 AM
Subject: Route 140 in Westminster

Dear Carmen,
My wife and I understand that we will be out of town when the public meeting on Route 140 through Westminster will be held. Is it possible that you might forward this--our public comment--to the relevant officials? We would very much appreciate that.

Public Comment by Two Westminster Dwellers
Please reduce the number of lanes of Route 140 through Westminster to the four innermost lanes: two on each side. Replace all traffic lights with "round-abouts," also known as "circles." Limit access to Route 140 to these traffic circles ONLY. Use the current outer lanes as parallel access roads, divided from the actual four lanes of Route 140 by impassable curbs. Thank you very much for considering our public comment.
Dolores Maminski and Bucky Edgett
663 Lake Drive
Westminster MD 21158-1448

CC: <planning@sha.state.md.us>, <enhancement@sha.state.md.us>

Appendix B
Traffic Data

Traffic Data
&
Critical Lane Analysis

2006 Existing Volumes & ADT

Turning Movement Summary and Level of Service

Count Date: 0
Conditions/
Design Year: 2006 Existing

Location: Old Baltimore Rd. / Market St./MD 140

Computed by: MCS Date: 1/10/07 Checked by: Date:

AM Peak Hour

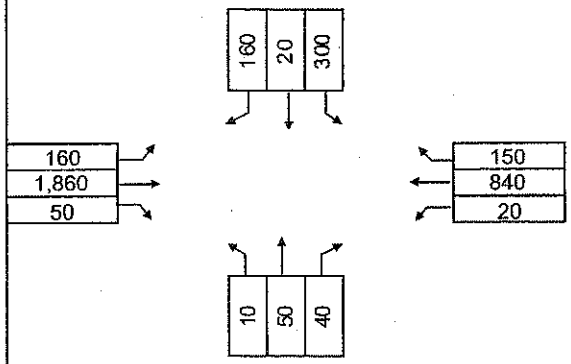

# Indicates shared lane for all movements

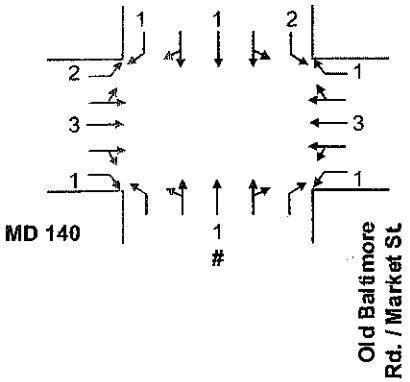

PM Peak Hour

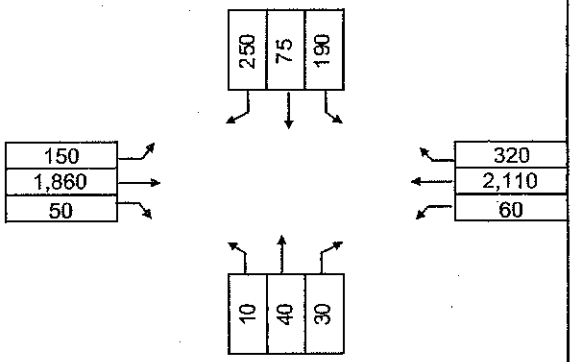

North/South movements are split-phased

No. of Lanes	Lane Use Factor	Level of Service	Critical Lane Volume Total
1	1.00	A	1,000 or LESS
2	0.55	B	1,000 to 1,150
3	0.40	C	1,150 to 1,300
4	0.30	D	1,300 to 1,450
5	0.25	E	1,450 to 1,600
Double turn	0.60	F	1,600 or MORE
Triple turn	0.45		

AM Peak Hour

Phase	Movement	Volume	Lane Use Factor	Lane Volume	Opposing Volume	Sum	Critical Lane Volume
1	NB	100	1	100	0	100	100
	NBR	0	1	0	0	0	
	NBL	0	1	0		0	
2	SB	20	1	20	0	20	180
	SBR	64	1	64	0	64	
	SBL	300	0.6	180		180	
3	EB	1,860	0.4	744	20	764	764
	EBR	50	1	50	20	70	
	EBL	0	0.6	0		0	
	WB	840	0.4	336	96	432	
	WBR	0	1	0	0	0	
	WBL	0	1	0		0	
							1,044
						Level Of Service	B
						v/c ratio	0.65

PM Peak Hour

Phase	Movement	Volume	Lane Use Factor	Lane Volume	Opposing Volume	Sum	Critical Lane Volume
1	NB	80	1	80	0	80	80
	NBR	0	1	0	0	0	
	NBL	0	1	0		0	
2	SB	75	1	75	0	75	160
	SBR	160	1	160	0	160	
	SBL	190	0.6	114	0	114	
3	EB	1,860	0.4	744	60	804	934
	EBR	50	1	50	60	110	
	EBL	0	0.6	0		0	
	WB	2,110	0.4	844	90	934	
	WBR	206	1	206	90	296	
	WBL	0	1	0		0	
							1,174
						Level Of Service	C
						v/c ratio	0.73

Turning Movement Summary and Level of Service

Count Date: 0 | Location: MD 97 / Malcolm Drive/MD 140
Conditions/
Design Year: 2006 Existing
Computed by: MCS | Date: 1/10/07 | Checked by: | Date:

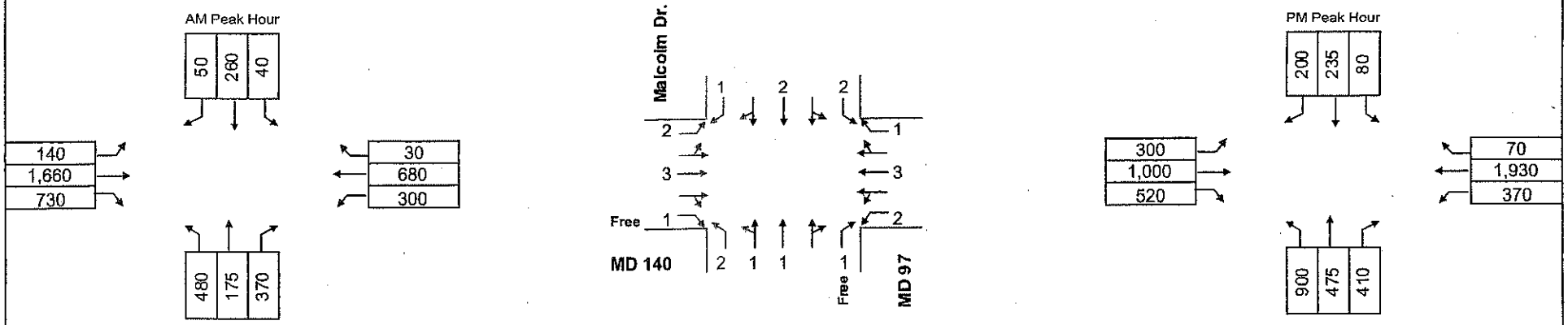

North/South movements are split-phased

No. of Lanes	Lane Use Factor	Level of Service	Critical Lane Volume Total
1	1.00	A	1,000 or LESS
2	0.55	B	1,000 to 1,150
3	0.40	C	1,150 to 1,300
4	0.30	D	1,300 to 1,450
5	0.25	E	1,450 to 1,600
Double turn	0.60	F	1,600 or MORE
Triple turn	0.45		

AM Peak Hour

Phase	Movement	Volume	Lane Use Factor	Lane Volume	Opposing Volume	Sum	Critical Lane Volume
1	NB	655	0.35	229	0	229	229
	NBR	0	1	0	0	0	
	NBL	0	0.6	0		0	
2	SB	260	0.55	143	0	143	143
	SBR	0	1	0	0	0	
	SBL	40	0.6	24		24	
3	EB	1,660	0.4	664	180	844	844
	EBR	0	1	0	0	0	
	EBL	0	0.6	0		0	
	WB	680	0.4	272	84	356	
	WBR	6	1	6	84	90	
	WBL	0	0.6	0		0	
							1,216
						Level Of Service	C
						v/c ratio	0.76

PM Peak Hour

Phase	Movement	Volume	Lane Use Factor	Lane Volume	Opposing Volume	Sum	Critical Lane Volume
1	NB	1,375	0.35	481	0	481	481
	NBR	0	1	0	0	0	
	NBL	0	0.6	0		0	
2	SB	235	0.55	129	0	129	129
	SBR	20	1	20	0	20	
	SBL	80	0.6	48	0	48	
3	EB	1,000	0.4	400	222	622	952
	EBR	0	1	0	0	0	
	EBL	0	0.6	0		0	
	WB	1,930	0.4	772	180	952	
	WBR	22	1	22	180	202	
	WBL	0	0.6	0		0	
							1,562
						Level Of Service	E
						v/c ratio	0.98

Turning Movement Summary and Level of Service

Count Date: 0 Location: Gorsuch Road/MD 140
Conditions/
Design Year: 2006 Existing

Computed by: MCS Date: 1/10/07 Checked by: Date:

AM Peak Hour

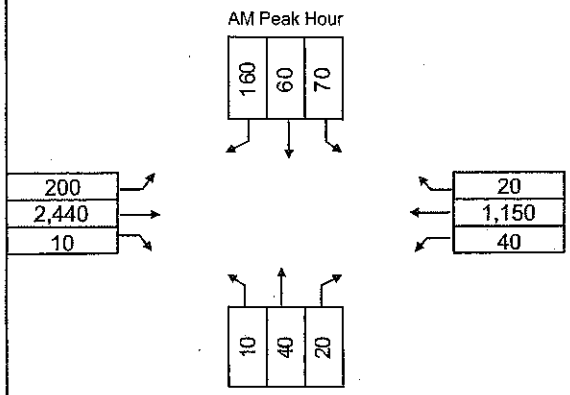

# Indicates shared lane for all movements

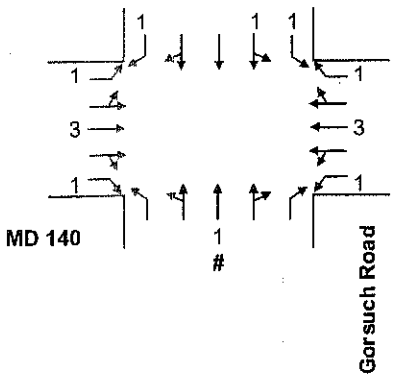

PM Peak Hour

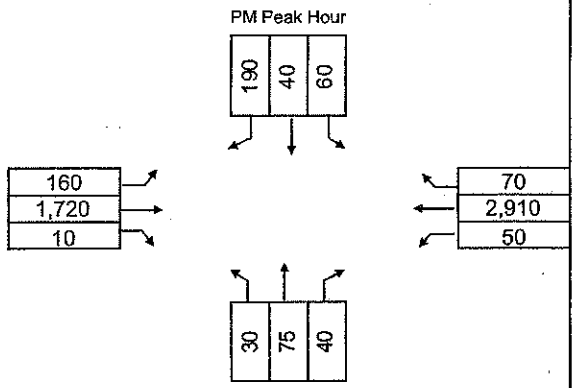

North/South movements are split-phased

No. of Lanes	Lane Use Factor	Level of Service	Critical Lane Volume Total
1	1.00	A	1,000 or LESS
2	0.55	B	1,000 to 1,150
3	0.40	C	1,150 to 1,300
4	0.30	D	1,300 to 1,450
5	0.25	E	1,450 to 1,600
Double turn	0.60	F	1,600 or MORE
Triple turn	0.45		

AM Peak Hour

Phase	Movement	Volume	Lane Use Factor	Lane Volume	Opposing Volume	Sum	Critical Lane Volume
1	NB	70	1	70	0	70	70
	NBR	0	1	0	0	0	
	NBL	0	1	0		0	
2	SB	130	0.6	78	0	78	78
	SBR	0	1	0	0	0	
	SBL	0	1	0		0	
3	EB	2,440	0.4	976	40	1,016	1,016
	EBR	10	1	10	40	50	
	EBL	0	1	0		0	
	WB	1,150	0.4	460	200	660	
	WBR	20	1	20	200	220	
	WBL	0	1	0		0	
							1,164
						Level Of Service	C
						v/c ratio	0.73

PM Peak Hour

Phase	Movement	Volume	Lane Use Factor	Lane Volume	Opposing Volume	Sum	Critical Lane Volume
1	NB	145	1	145	0	145	145
	NBR	0	1	0	0	0	
	NBL	0	1	0		0	
2	SB	100	0.6	60	0	60	60
	SBR	30	1	30	0	30	
	SBL	0	1	0	0	0	
3	EB	1,720	0.4	688	50	738	1,324
	EBR	10	1	10	50	60	
	EBL	0	1	0		0	
	WB	2,910	0.4	1,164	160	1,324	
	WBR	70	1	70	160	230	
	WBL	0	1	0		0	
							1,529
						Level Of Service	E
						v/c ratio	0.96

Turning Movement Summary and Level of Service

Count Date: 0
Conditions/
Design Year: 2006 Existing

Location: Ralph Street / Cranberry Road/MD 140

Computed by: MCS Date: 1/10/07 Checked by: Date:

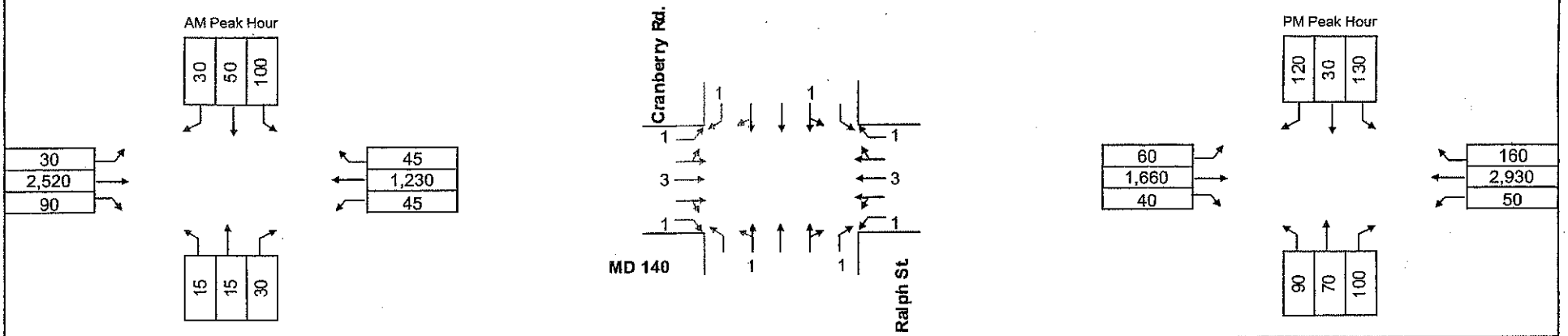

North/South movements are split-phased

No. of Lanes	Lane Use Factor	Level of Service	Critical Lane Volume Total
1	1.00	A	1,000 or LESS
2	0.55	B	1,000 to 1,150
3	0.40	C	1,150 to 1,300
4	0.30	D	1,300 to 1,450
5	0.25	E	1,450 to 1,600
Double turn	0.60	F	1,600 or MORE
Triple turn	0.45		

AM Peak Hour

Phase	Movement	Volume	Lane Use Factor	Lane Volume	Opposing Volume	Sum	Critical Lane Volume
1	NB	30	1	30	0	30	30
	NBR	0	1	0	0	0	
	NBL	0	1	0		0	
2	SB	150	1	150	0	150	150
	SBR	0	1	0	0	0	
	SBL	0	1	0		0	
3	EB	2,520	0.4	1,008	45	1,053	1,053
	EBR	90	1	90	45	135	
	EBL	0	1	0		0	
	WB	1,230	0.4	492	30	522	
	WBR	45	1	45	30	75	
	WBL	0	1	0		0	
							1,233
						Level Of Service	C
						v/c ratio	0.77

PM Peak Hour

Phase	Movement	Volume	Lane Use Factor	Lane Volume	Opposing Volume	Sum	Critical Lane Volume
1	NB	160	1	160	0	160	160
	NBR	50	1	50	0	50	
	NBL	0	1	0		0	
2	SB	160	1	160	0	160	160
	SBR	60	1	60	0	60	
	SBL	0	1	0	0	0	
3	EB	1,660	0.4	664	50	714	1,232
	EBR	40	1	40	50	90	
	EBL	0	1	0		0	
	WB	2,930	0.4	1,172	60	1,232	
	WBR	160	1	160	60	220	
	WBL	0	1	0		0	
							1,552
						Level Of Service	E
						v/c ratio	0.97

Turning Movement Summary and Level of Service

Count Date: 0 Location: Center Street/MD 140
Conditions/
Design Year: 2006 Existing

Computed by: MCS Date: 1/10/07 Checked by: Date:

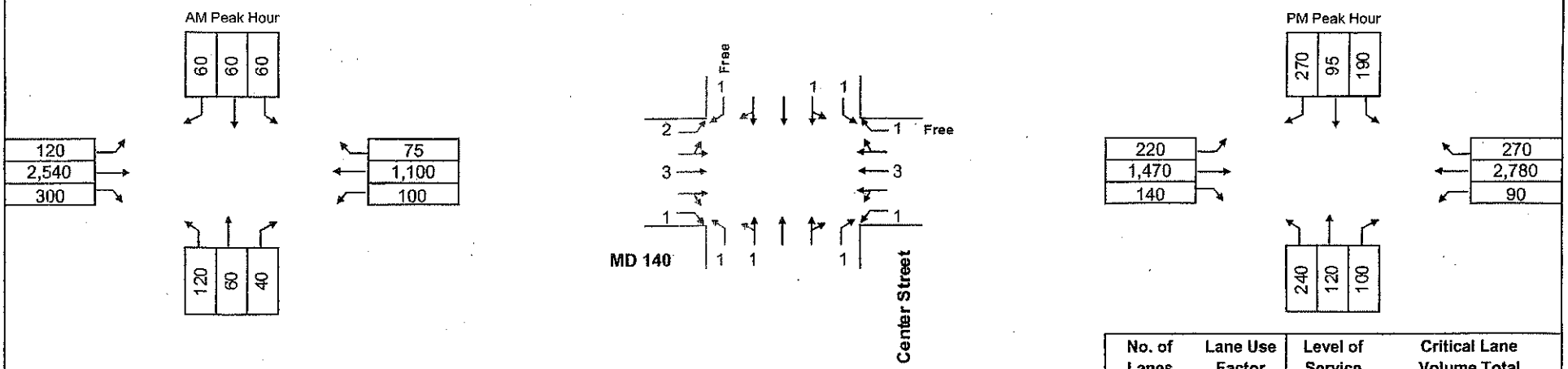

North/South movements are split-phased

No. of Lanes	Lane Use Factor	Level of Service	Critical Lane Volume Total
1	1.00	A	1,000 or LESS
2	0.55	B	1,000 to 1,150
3	0.40	C	1,150 to 1,300
4	0.30	D	1,300 to 1,450
5	0.25	E	1,450 to 1,600
Double turn	0.60	F	1,600 or MORE
Triple turn	0.45		

AM Peak Hour

Phase	Movement	Volume	Lane Use Factor	Lane Volume	Opposing Volume	Sum	Critical Lane Volume
1	NB	180	0.6	108	0	108	108
	NBR	0	1	0	0	0	
	NBL	0	1	0		0	
2	SB	120	0.6	72	0	72	72
	SBR	0	1	0	0	0	
	SBL	0	1	0		0	
3	EB	2,540	0.4	1,016	100	1,116	1,116
	EBR	300	1	300	100	400	
	EBL	0	0.6	0		0	
	WB	1,100	0.4	440	72	512	
	WBR	0	1	0	0	0	
	WBL	0	1	0		0	
							1,296
						Level Of Service	C
						v/c ratio	0.81

PM Peak Hour

Phase	Movement	Volume	Lane Use Factor	Lane Volume	Opposing Volume	Sum	Critical Lane Volume
1	NB	360	0.6	216	0	216	216
	NBR	10	1	10	0	10	
	NBL	0	1	0		0	
2	SB	285	0.6	171	0	171	171
	SBR	0	1	0	0	0	
	SBL	0	1	0	0	0	
3	EB	1,470	0.4	588	90	678	1,244
	EBR	140	1	140	90	230	
	EBL	0	0.6	0		0	
	WB	2,780	0.4	1,112	132	1,244	
	WBR	0	1	0	0	0	
	WBL	0	1	0		0	
							1,631
						Level Of Service	F
						v/c ratio	1.02

O:\D100000727\12\Design (non-Cad)\traffic\FONSI Stuff\[CLV-MD140_at_Center.xls]Report

Turning Movement Summary and Level of Service

Count Date:
Condition: Existing
Design Year: 2006
Computed by: TAR Date: 10/31/2007

Location: MD 140 Eastbound/MD 27
Checked by: RLT Date: 10/31/2007

URS

AM PEAK HOUR:

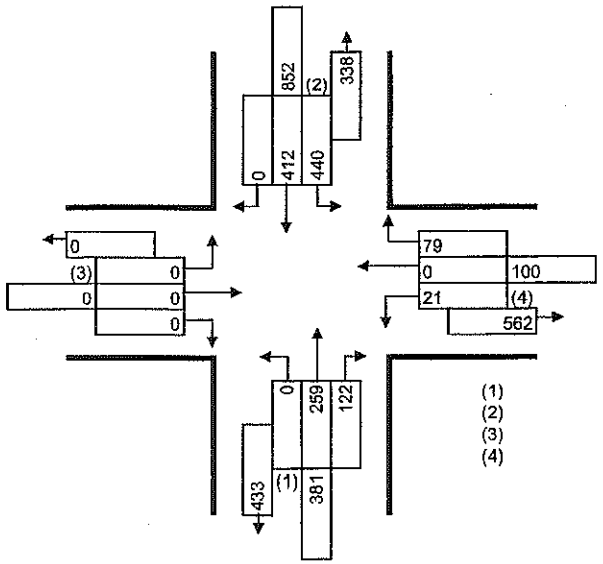

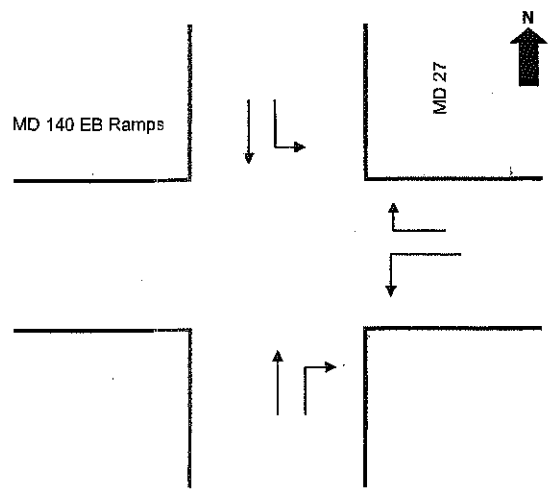

PM PEAK HOUR:

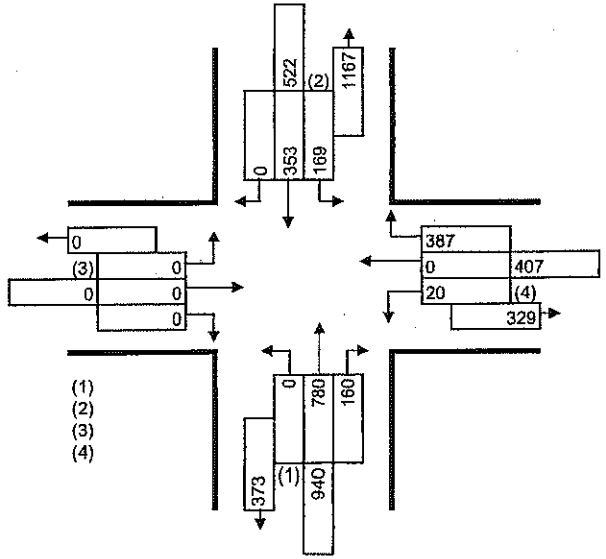

Phasing (Φ)

1	2	3	4
5	6	7	8

Intersection Control Type:
Signal X Stop _____ Ways _____

No. of Lanes		Lane Use Factor
1	=	1.00
2	=	0.55
3	=	0.40
4	=	0.30
Dble. Left	=	0.60
Trpl. Left	=	0.45

Level of Service		Critical Lane Vol. Total
A	≤	1000
B	≤	1150
C	≤	1300
D	≤	1450
E	≤	1600
F	>	1600

Opposing Volume (vph)		PCE
≤	199	1.1
≤	599	2.0
≤	799	3.0
≤	999	4.0
>	1000	5.0

Φ	Movement	Volume (1)	Lane Use Factor (2)	Lane Volume (1)*(2)=(3)	Opposing Lefts (4)	Lefts Lane Use Factor (5)	Left Volume (4)*(5)=(6)	Critical Lane Volume (3)+(6)	*
	NB	259	1.00	259	440	1.00	440	699	*
	SB	412	1.00	412	0	1.00	0	412	
	WBL	21	1.00	21	0	1.00	0	21	*

Remarks:
WBR: 79 - 440 < 0

* Critical Volume.

AM TOTAL 720
v/c = 0.45 LOS A

Φ	Movement	Volume (1)	Lane Use Factor (2)	Lane Volume (1)*(2)=(3)	Opposing Lefts (4)	Lefts Lane Use Factor (5)	Left Volume (4)*(5)=(6)	Critical Lane Volume (3)+(6)	*
	NB	780	1.00	780	169	1.00	169	949	*
	SB	353	1.00	353	0	1.00	0	353	
	WBL	20	1.00	20	0	1.00	0	20	
	WBR	218	1.00	218	0	1.00	0	218	*

Remarks:
WBR: 387 - 169 = 218

* Critical Volume.

PM TOTAL 1167
v/c = 0.73 LOS C

Turning Movement Summary and Level of Service

Count Date:
Condition: Existing
Design Year: 2006
Computed by: TAR Date: 10/31/2007

Location: MD 140 Westbound/MD 27
Checked by: RLT Date: 10/31/2007

URS

AM PEAK HOUR:

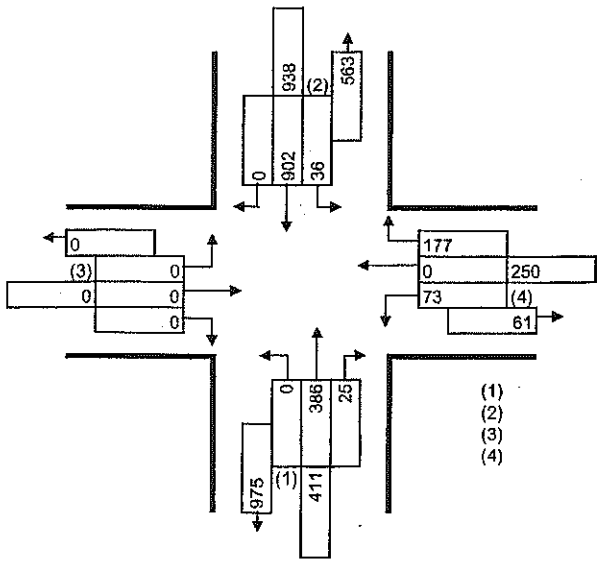

MD 140 WB Ramps

MD 27

N

PM PEAK HOUR:

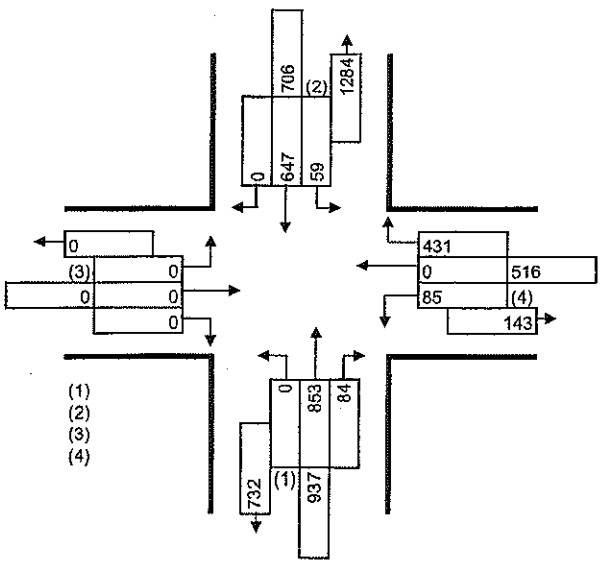

Phasing (Φ)			
1	2	3	4
5	6	7	8

Intersection Control Type:
Signal X Stop _____ Ways _____

No. of Lanes		Lane Use Factor
1	=	1.00
2	=	0.55
3	=	0.40
4	=	0.30
Dble. Left	=	0.60
Trpl. Left	=	0.45

Level of Service		Critical Lane Vol. Total
A	≤	1000
B	≤	1150
C	≤	1300
D	≤	1450
E	≤	1600
F	>	1600

Opposing Volume (vph)		PCE
≤	199	1.1
≤	599	2.0
≤	799	3.0
≤	999	4.0
>	1000	5.0

Φ	Movement	Volume (1)	Lane Use Factor (2)	Lane Volume (1)*(2)=(3)	Opposing Lefts (4)	Lefts Lane Use Factor (5)	Left Volume (4)*(5)=(6)	Critical Lane Volume (3)+(6)	*
	NB	386	1.00	386	36	1.00	36	422	
	SB	902	1.00	902	0	1.00	0	902	*
	WBL	73	1.00	73	0	1.00	0	73	
	WBR	141	1.00	141	0	1.00	0	141	*

Remarks:
WBR = 177 - 36 = 141
* Critical Volume.

AM TOTAL 1043
v/c = 0.65 LOS B

Φ	Movement	Volume (1)	Lane Use Factor (2)	Lane Volume (1)*(2)=(3)	Opposing Lefts (4)	Lefts Lane Use Factor (5)	Left Volume (4)*(5)=(6)	Critical Lane Volume (3)+(6)	*
	NB	853	1.00	853	59	1.00	59	912	*
	SB	647	1.00	647	0	1.00	0	647	
	WBL	85	1.00	85	0	1.00	0	85	
	WBR	372	1.00	372	0	1.00	0	372	*

Remarks:
WBR = 431 - 59 = 372
* Critical Volume.

PM TOTAL 1284
v/c = 0.80 LOS C

Turning Movement Summary and Level of Service

Count Date: 0 Location: Englar Road/MD 140
Conditions/
Design Year: 2006 Existing
Computed by: MCS Date: 2/1/07 Checked by: Date:

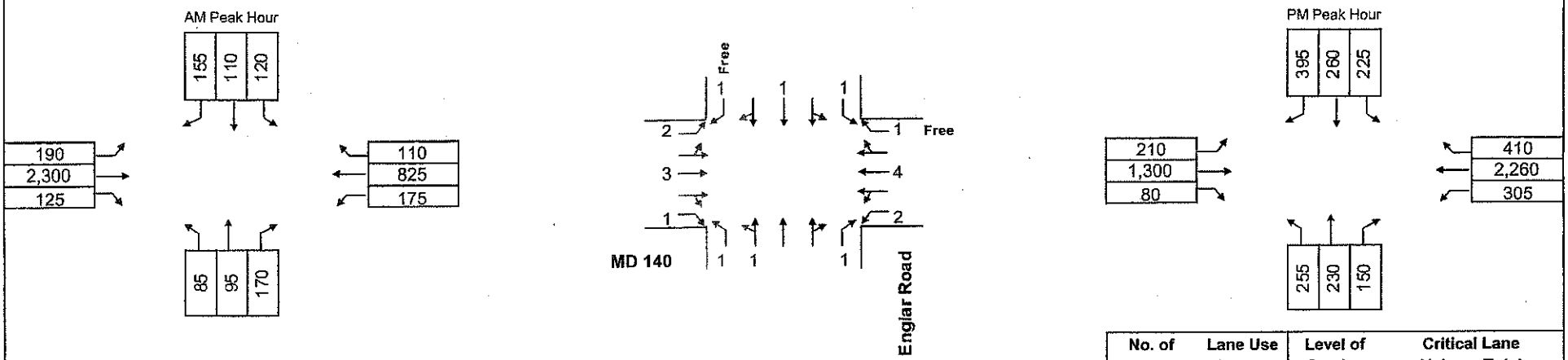

North/South movements are split-phased

No. of Lanes	Lane Use Factor	Level of Service	Critical Lane Volume Total
1	1.00	A	1,000 or LESS
2	0.55	B	1,000 to 1,150
3	0.40	C	1,150 to 1,300
4	0.30	D	1,300 to 1,450
5	0.25	E	1,450 to 1,600
Double turn	0.60	F	1,600 or MORE
Triple turn	0.45		

AM Peak Hour

Phase	Movement	Volume	Lane Use Factor	Lane Volume	Opposing Volume	Sum	Critical Lane Volume
1	NB	180	0.6	108	0	108	170
	NBR	170	1	170	0	170	
	NBL	0	1	0		0	
2	SB	110	1	110	0	110	120
	SBR	0	1	0	0	0	
	SBL	120	1	120		120	
3	EB	2,300	0.4	920	105	1,025	1,025
	EBR	125	1	125	105	230	
	EBL	0	0.6	0		0	
	WB	825	0.3	248	114	362	
	WBR	0	1	0	0	0	
	WBL	0	0.6	0		0	
							1,315
						Level Of Service	D
						v/c ratio	0.82

PM Peak Hour

Phase	Movement	Volume	Lane Use Factor	Lane Volume	Opposing Volume	Sum	Critical Lane Volume
1	NB	485	0.6	291	0	291	291
	NBR	150	1	150	0	150	
	NBL	0	1	0		0	
2	SB	260	1	260	0	260	260
	SBR	0	1	0	0	0	
	SBL	225	1	225	0	225	
3	EB	1,300	0.4	520	183	703	804
	EBR	80	1	80	183	263	
	EBL	0	0.6	0		0	
	WB	2,260	0.3	678	126	804	
	WBR	0	1	0	0	0	
	WBL	0	0.6	0		0	
							1,355
						Level Of Service	D
						v/c ratio	0.85

Turning Movement Summary and Level of Service

Count Date: 0 Location: Sullivan Road/MD 140
Conditions/
Design Year: 2006 Existing

Computed by: MCS Date: 2/1/07 Checked by: Date:

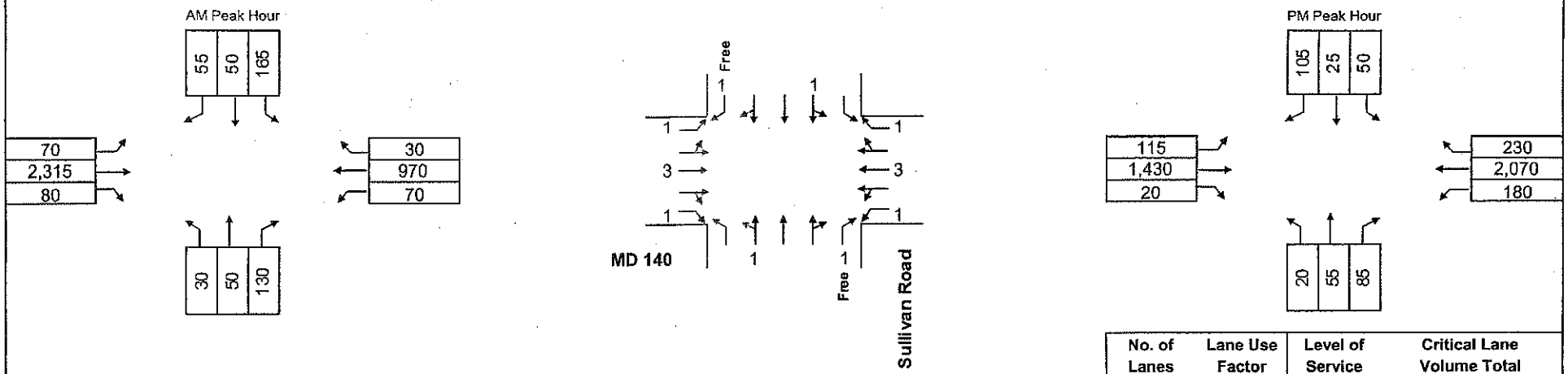

North/South movements are split-phased

No. of Lanes	Lane Use Factor	Level of Service	Critical Lane Volume Total
1	1.00	A	1,000 or LESS
2	0.55	B	1,000 to 1,150
3	0.40	C	1,150 to 1,300
4	0.30	D	1,300 to 1,450
5	0.25	E	1,450 to 1,600
Double turn	0.60	F	1,600 or MORE
Triple turn	0.45		

AM Peak Hour

Phase	Movement	Volume	Lane Use Factor	Lane Volume	Opposing Volume	Sum	Critical Lane Volume
1	NB	80	1	80	0	80	80
	NBR	0	1	0	0	0	
	NBL	0	1	0		0	
2	SB	215	1	215	0	215	215
	SBR	0	1	0	0	0	
	SBL	0	1	0		0	
3	EB	2,315	0.4	926	70	996	996
	EBR	80	1	80	70	150	
	EBL	0	1	0		0	
	WB	970	0.4	388	70	458	
	WBR	30	1	30	70	100	
	WBL	0	1	0		0	
							1,291
						Level Of Service	C
						v/c ratio	0.81

PM Peak Hour

Phase	Movement	Volume	Lane Use Factor	Lane Volume	Opposing Volume	Sum	Critical Lane Volume
1	NB	75	1	75	0	75	75
	NBR	0	1	0	0	0	
	NBL	0	1	0		0	
2	SB	75	1	75	0	75	75
	SBR	0	1	0	0	0	
	SBL	0	1	0	0	0	
3	EB	1,430	0.4	572	180	752	943
	EBR	20	1	20	180	200	
	EBL	0	1	0		0	
	WB	2,070	0.4	828	115	943	
	WBR	230	1	230	115	345	
	WBL	0	1	0		0	
							1,093
						Level Of Service	B
						v/c ratio	0.68

2006 EXISTING ADT

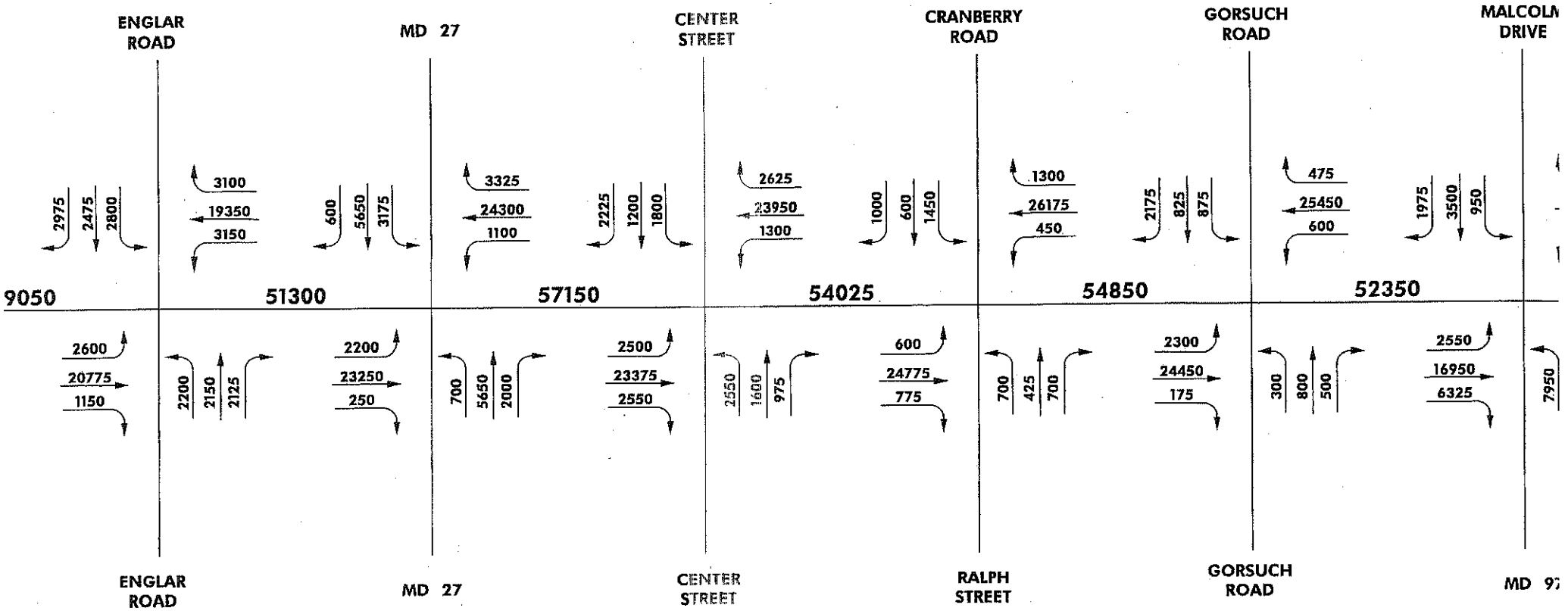

2006 EXISTING ADT

WESTMINSTER MD140 INTERCHANGE STUDY

2006 AM & PM PEAK HOURS

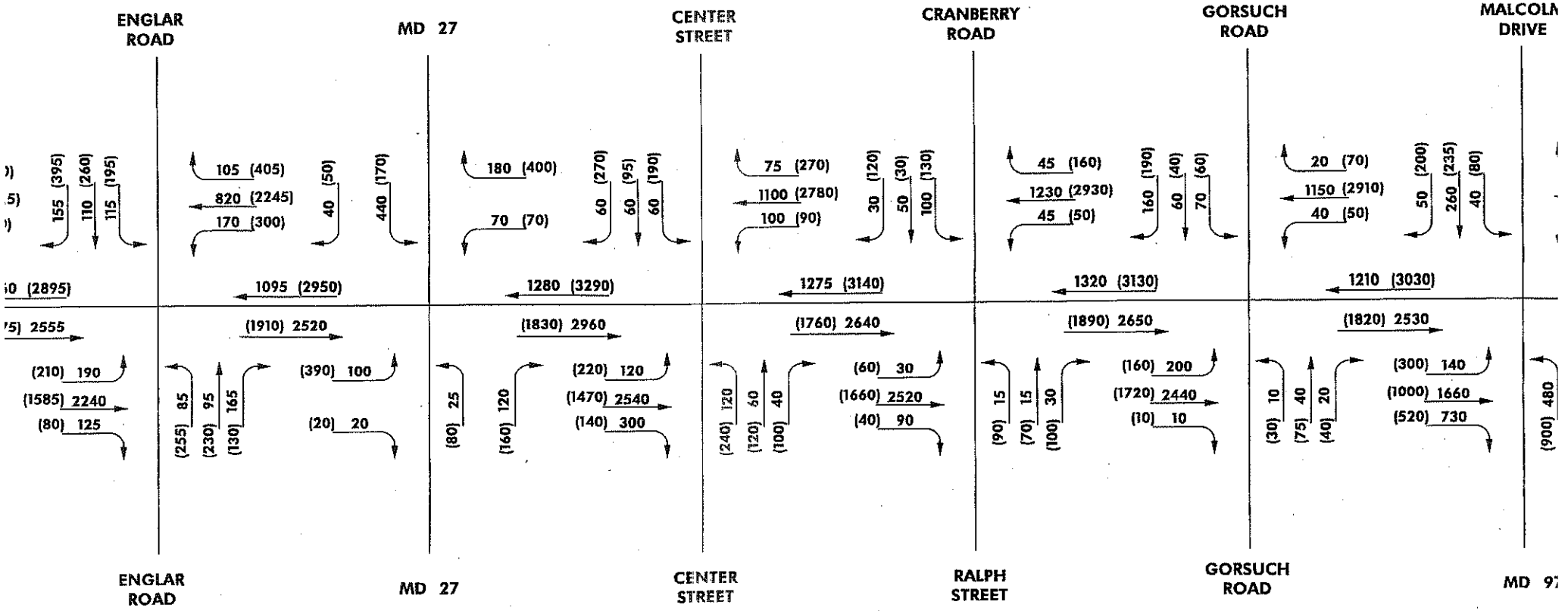

AM (PM)

WESTMINSTER MD140 INTERCHANGE STUDY

Traffic Data
&
Critical Lane Analysis

Alternate 1 – 2025 No-Build & ADT

Turning Movement Summary and Level of Service

Count Date: 2025 | Condition: No Build | Design Year: | Computed by: SDB Date: 9/6/02

Location: MD 140 & Sullivan Rd | Checked by: TAR Date: 10/2/02

URS

AM PEAK HOUR:

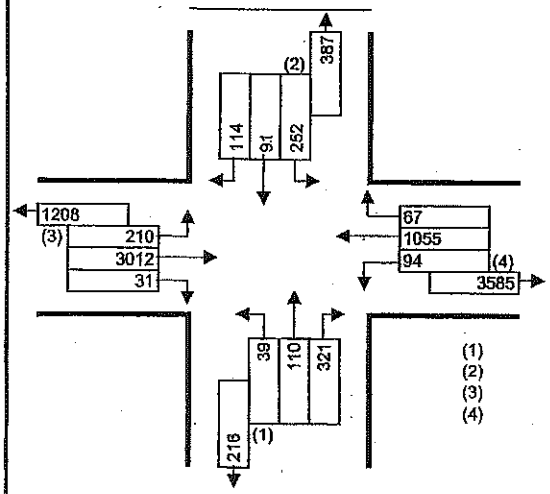

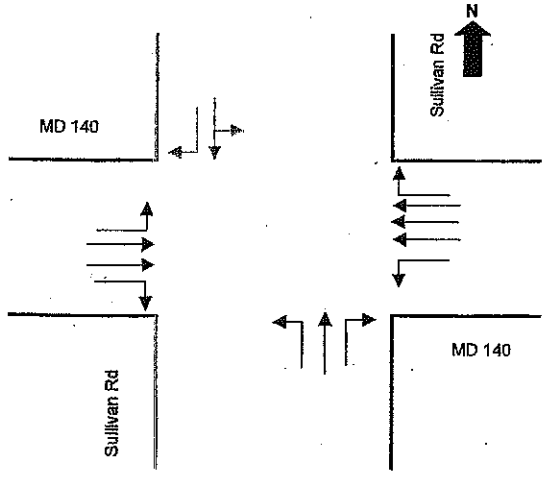

PM PEAK HOUR:

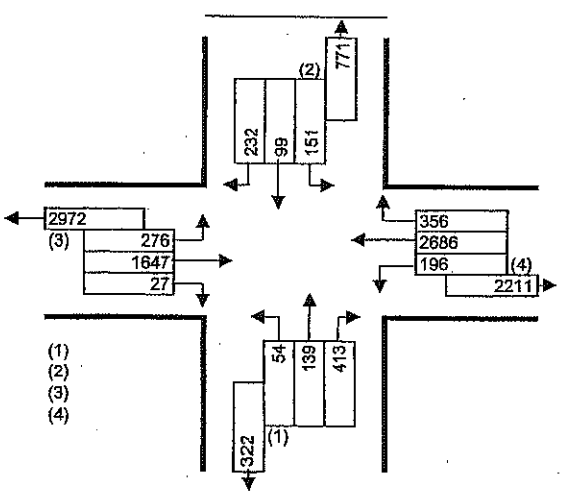

Phasing (Φ)

1	2	3	4
5	6	7	8

Intersection Control Type: Signal X Stop ____ Ways ____

No. of Lanes		Lane Use Factor
1	=	1.00
2	=	0.55
3	=	0.40
4	=	0.30
Dble. Left	=	0.60
Trpl. Left	=	0.50

Level of Service		Critical Lane Vol. Total
A	V ≤	1000
B	V ≤	1150
C	V ≤	1300
D	V ≤	1450
E	V ≤	1600
F	V >	1600

Opposing Volume (vph)	PCE
V ≤ 199	1.1
V ≤ 599	2.0
V ≤ 799	3.0
V ≤ 999	4.0
V > 1000	5.0

Φ	Movement	Volume (1)	Lane Use Factor (2)	Lane Volume (1)*(2)=(3)	Opposing Lefts (4)	Lefts Lane Use Factor (5)	Left Volume (4)*(5)=(6)	Critical Lane Volume (3)+(6)	*
1	NBR	227	1.00	227	0	1.00	0	227	*
2	SBTL	343	1.00	343	0	1.00	0	343	*
3	EBT	3012	0.55	1657	94	1.00	94	1751	*
3	WBT	1055	0.40	422	210	1.00	210	632	

Remarks: NBR = 321 - 94 = 227

* Critical Volume.

AM TOTAL 2321

v/c = 1.45 LOS F

Φ	Movement	Volume (1)	Lane Use Factor (2)	Lane Volume (1)*(2)=(3)	Opposing Lefts (4)	Lefts Lane Use Factor (5)	Left Volume (4)*(5)=(6)	Critical Lane Volume (3)+(6)	*
1	NBR	217	1.00	217	0	1.00	0	217	*
2	SBTL	250	1.00	250	0	1.00	0	250	*
3	EBT	1647	0.55	906	196	1.00	196	1102	
3	WBT	2686	0.40	1074	276	1.00	276	1350	*

Remarks: NBR = 413 - 196 = 217

* Critical Volume.

PM TOTAL 1817

v/c = 1.14 LOS F

Turning Movement Summary and Level of Service

Count Date: 2025 | Condition: No Build | Design Year: | Computed by: SDB Date: 9/6/02

Location: MD 140 & Englar Rd | Checked by: TAR Date: 10/2/02

URS

AM PEAK HOUR:

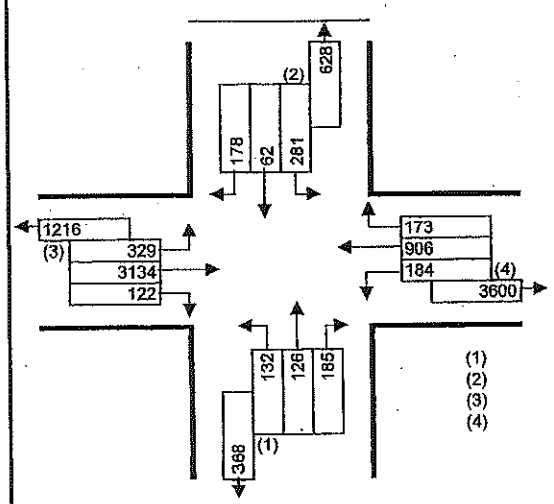

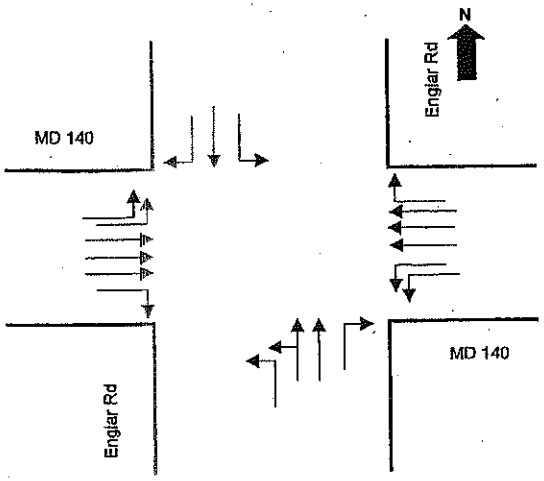

PM PEAK HOUR:

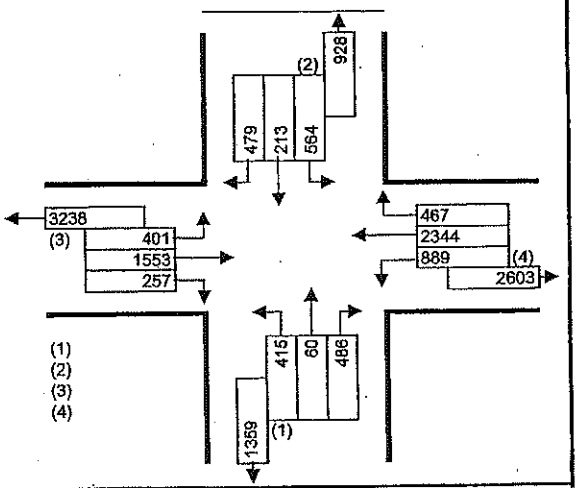

No. of Lanes	Lane Use Factor
1	= 1.00
2	= 0.55
3	= 0.40
4	= 0.30
Dble. Left	= 0.60
Trpl. Left	= 0.50

Level of Service	Critical Lane Vol. Total
A	≤ 1000
B	≤ 1150
C	≤ 1300
D	≤ 1450
E	≤ 1600
F	> 1600

Opposing Volume (vph)	PCE
≤ 199	1.1
≤ 599	2.0
≤ 799	3.0
≤ 999	4.0
> 1000	5.0

Phasing (Φ)

1	2	3	4
5	6	7	8

Intersection Control Type: Signal X Stop ____ Ways ____

Φ	Movement	Volume (1)	Lane Use Factor (2)	Lane Volume (1)*(2)=(3)	Opposing Lefts (4)	Lefts Lane Use Factor (5)	Left Volume (4)*(5)=(6)	Critical Lane Volume (3)+(6)	*
1	NBLT	258	0.50	129	0	1.00	0	129	*
2	SBL	281	1.00	281	0	1.00	0	281	*
3	EBT	3134	0.40	1254	184	0.60	110	1364	*
3	WBT	906	0.40	362	329	0.60	197	560	
				0			0	0	

Remarks: NBR - not critical

* Critical Volume.

AM TOTAL 1774

v/c = 1.11 LOS F

Φ	Movement	Volume (1)	Lane Use Factor (2)	Lane Volume (1)*(2)=(3)	Opposing Lefts (4)	Lefts Lane Use Factor (5)	Left Volume (4)*(5)=(6)	Critical Lane Volume (3)+(6)	*
1	NBL	415	0.60	249	0	1.00	0	249	*
2	SBL	564	1.00	564	0	1.00	0	564	*
3	EBT	1553	0.40	621	889	0.60	533	1155	
3	WBT	2344	0.40	938	401	0.60	241	1178	*
				0			0	0	

Remarks: NBR - not critical
NBT - won't use shared right turn lane

* Critical Volume.

PM TOTAL 1991

v/c = 1.24 LOS F

Turning Movement Summary and Level of Service

Count Date: 2025
Condition: No Build
Design Year:
Computed by: SDB Date: 9/16/2002

Location: MD 140 EB on/off ramp & MD 27
Checked by: TAR Date: 10/2/2002

URS

AM PEAK HOUR:

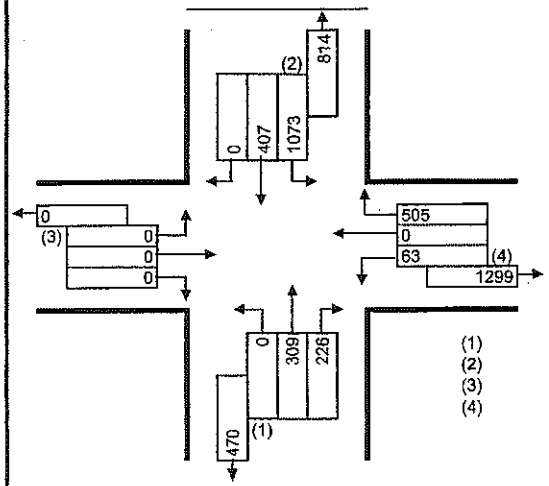

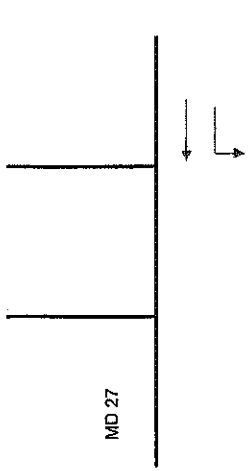

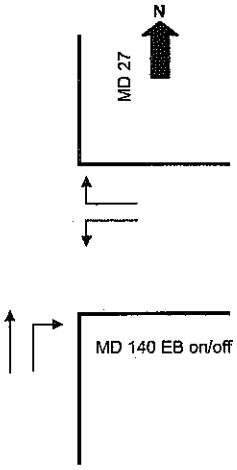

PM PEAK HOUR:

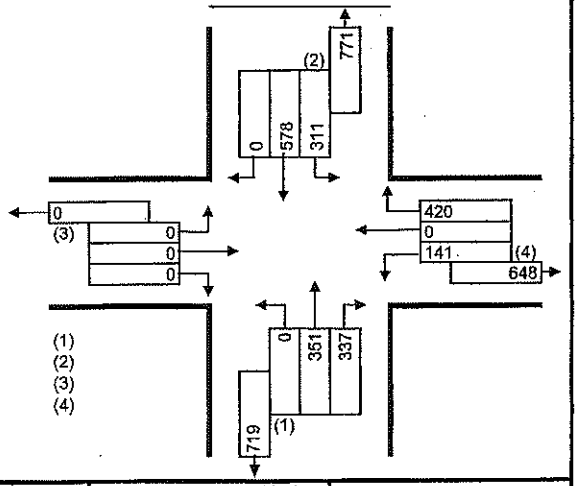

No. of Lanes		Lane Use Factor
1	=	1.00
2	=	0.55
3	=	0.40
4	=	0.30
Dble. Left	=	0.60
Trpl. Left	=	0.50

Level of Service		Critical Lane Vol. Total
A	≤	1000
B	≤	1150
C	≤	1300
D	≤	1450
E	≤	1600
F	>	1600

Opposing Volume (vph)		PCE
≤ 199		1.1
≤ 599		2.0
≤ 799		3.0
≤ 999		4.0
> 1000		5.0

Phasing (Φ)

1	2	3	4
5	6	7	8

Intersection Control Type:
Signal X Stop ____ Ways ____

Φ	Movement	Volume (1)	Lane Use Factor (2)	Lane Volume (1)*(2)=(3)	Opposing Lefts (4)	Lefts Lane Use Factor (5)	Left Volume (4)*(5)=(6)	Critical Lane Volume (3)+(6)	*
	NBT	309	1.00	309	1073	1.00	1073	1382	*
	SBT	407	1.00	407	0	1.00	0	407	
	WBL	63	1.00	63	0	1.00	0	63	*
				0			0	0	

Remarks: WBR = 0

* Critical Volume.

AM TOTAL 1445

v/c = 0.90 LOS D

Φ	Movement	Volume (1)	Lane Use Factor (2)	Lane Volume (1)*(2)=(3)	Opposing Lefts (4)	Lefts Lane Use Factor (5)	Left Volume (4)*(5)=(6)	Critical Lane Volume (3)+(6)	*
	NBT	351	1.00	351	311	1.00	311	662	*
	SBT	578	1.00	578	0	1.00	0	578	
	WBL	141	1.00	141	0	1.00	0	141	*
				0			0	0	

Remarks: WBR = 420 - 311 = 109

* Critical Volume.

PM TOTAL 803

v/c = 0.50 LOS A

Turning Movement Summary and Level of Service

Count Date: 2025 | Condition: No Build | Design Year: | Computed by: SDB Date: 9/16/2002

Location: MD 140 WB on/off ramp & MD 27 | Checked by: TAR Date: 10/2/2002

URS

AM PEAK HOUR:

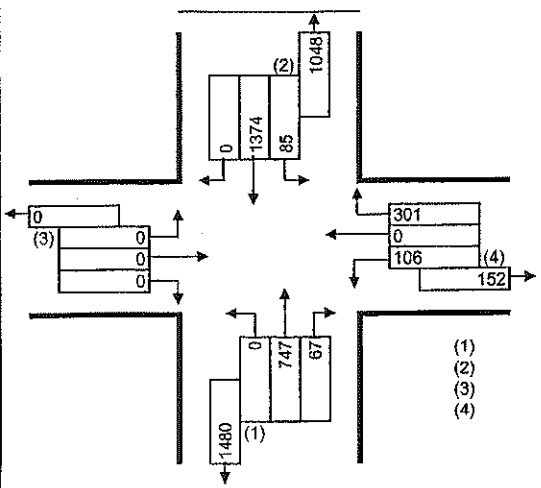

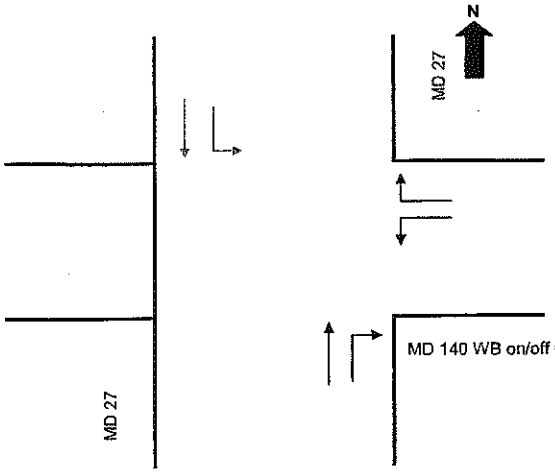

PM PEAK HOUR:

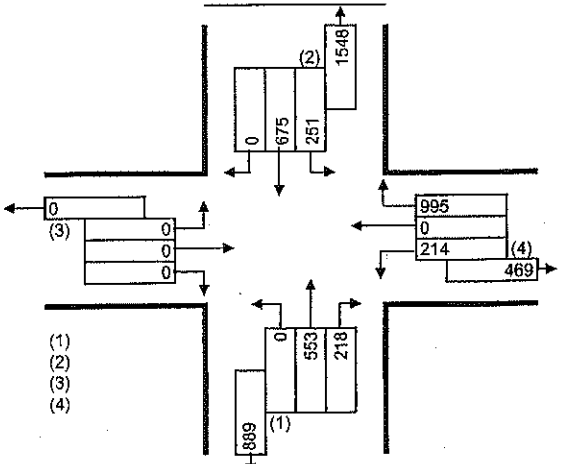

Phasing (Φ)

1	2	3	4
5	6	7	8

Intersection Control Type: Signal X Stop ____ Ways ____

No. of Lanes		Lane Use Factor
1	=	1.00
2	=	0.55
3	=	0.40
4	=	0.30
Dble. Left	=	0.60
Trpl. Left	=	0.50

Level of Service		Critical Lane Vol. Total
A	≤	1000
B	≤	1150
C	≤	1300
D	≤	1450
E	≤	1600
F	>	1600

Opposing Volume (vph)		PCE
≤	199	1.1
≤	599	2.0
≤	799	3.0
≤	999	4.0
>	1000	5.0

Φ	Movement	Volume (1)	Lane Use Factor (2)	Lane Volume (1)*(2)=(3)	Opposing Lefts (4)	Lefts Lane Use Factor (5)	Left Volume (4)*(5)=(6)	Critical Lane Volume (3)+(6)	*
	NBT	747	1.00	747	85	1.00	85	832	
	SBT	1374	1.00	1374	0	1.00	0	1374	*
	WBR	216	1.00	216	0	1.00	0	216	*
				0			0	0	

Remarks: WBR = 301 - 85 = 216

AM TOTAL 1590

v/c = 0.99 LOS E

* Critical Volume.

Φ	Movement	Volume (1)	Lane Use Factor (2)	Lane Volume (1)*(2)=(3)	Opposing Lefts (4)	Lefts Lane Use Factor (5)	Left Volume (4)*(5)=(6)	Critical Lane Volume (3)+(6)	*
	NBT	553	1.00	553	251	1.00	251	804	
	SBT	675	1.00	675	0	1.00	0	675	
	WBR	744	1.00	744	0	1.00	0	744	*
				0			0	0	

Remarks: WBR = 995 - 251 = 744

PM TOTAL 1548

v/c = 0.97 LOS E

* Critical Volume.

Turning Movement Summary and Level of Service

Count Date: 2025 | Condition: No Build | Design Year: | Computed by: SDB Date: 9/6/02

Location: MD 140 & Center St | Checked by: TAR Date: 10/2/02

URS

AM PEAK HOUR:

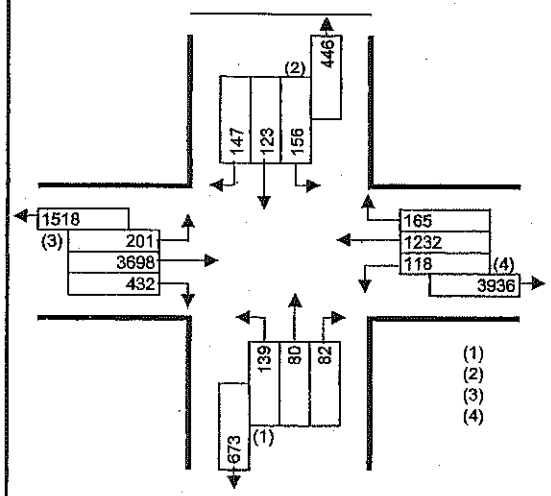

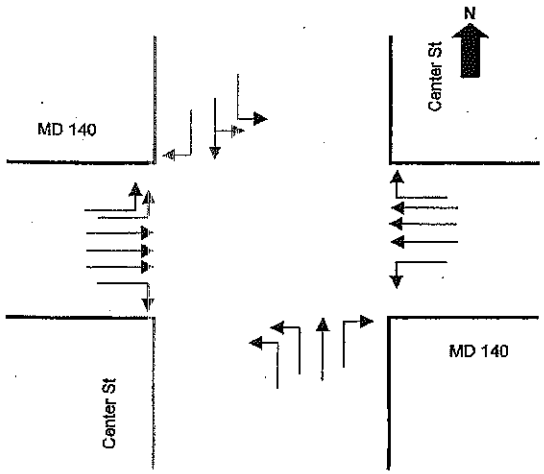

PM PEAK HOUR:

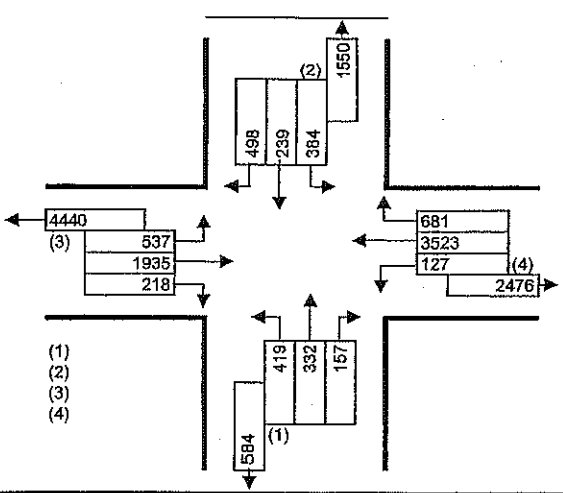

Phasing (Φ)

1	2	3	4
5	6	7	8

Intersection Control Type: Signal X Stop ____ Ways ____

No. of Lanes		Lane Use Factor
1	=	1.00
2	=	0.55
3	=	0.40
4	=	0.30
Dble. Left	=	0.60
Trpl. Left	=	0.50

Level of Service	Critical Lane Vol. Total
A	≤ 1000
B	1150
C	1300
D	1450
E	1600
F	> 1600

Opposing Volume (vph)	PCE
≤ 199	1.1
≤ 599	2.0
≤ 799	3.0
≤ 999	4.0
> 1000	5.0

Φ	Movement	Volume (1)	Lane Use Factor (2)	Lane Volume (1)*(2)=(3)	Opposing Lefts (4)	Lefts Lane Use Factor (5)	Left Volume (4)*(5)=(6)	Critical Lane Volume (3)+(6)	*
1	NBT	80	1.00	80	0	1.00	0	80	
2	SBLT	279	0.60	167	0	1.00	0	167	*
3	EBT	3698	0.40	1479	118	1.00	118	1597	*
3	WBT	1232	0.40	493	201	0.60	121	613	
1	NBL	139	0.60	83	0	1.00	0	83	*

Remarks:

* Critical Volume.

AM TOTAL 1848

v/c = 1.16 LOS F

Φ	Movement	Volume (1)	Lane Use Factor (2)	Lane Volume (1)*(2)=(3)	Opposing Lefts (4)	Lefts Lane Use Factor (5)	Left Volume (4)*(5)=(6)	Critical Lane Volume (3)+(6)	*
1	NBT	332	1.00	332	0	1.00	0	332	*
2	SBLT	623	0.60	374	0	1.00	0	374	*
3	EBT	1935	0.40	774	127	1.00	127	901	
3	WBT	3523	0.40	1409	537	0.60	322	1731	*
				0			0	0	

Remarks: SBR = 0

* Critical Volume.

PM TOTAL 2437

v/c = 1.52 LOS F

Turning Movement Summary and Level of Service

Count Date: 2025
Condition: No Build
Design Year:
Computed by: SDB Date: 9/6/02

Location: MD 140 & Cranberry Rd / Ralph St
Checked by: TAR Date: 10/2/02

URS

AM PEAK HOUR:

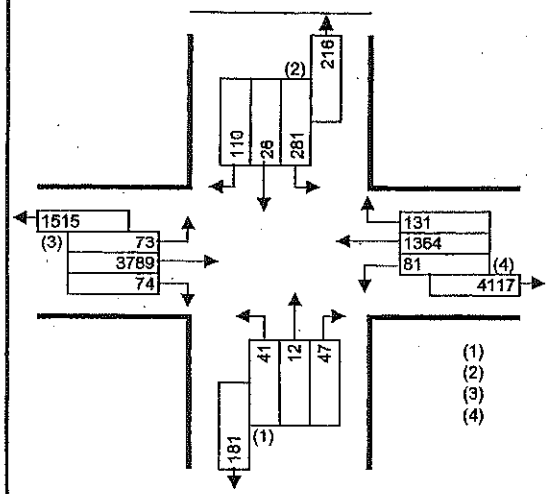

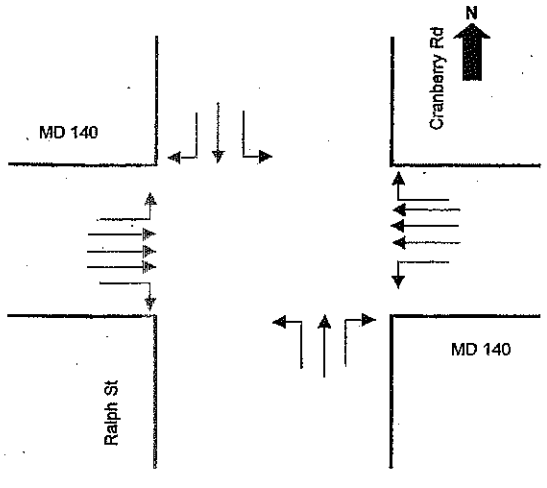

PM PEAK HOUR:

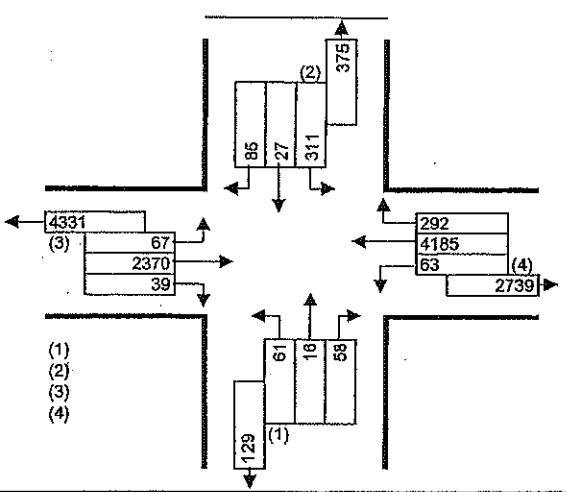

Phasing (Φ)			
1	2	3	4
5	6	7	8

Intersection Control Type:
Signal X Stop _____ Ways _____

No. of Lanes		Lane Use Factor
1	=	1.00
2	=	0.55
3	=	0.40
4	=	0.30
Dble. Left	=	0.60
Trpl. Left	=	0.50

Level of Service	Critical Lane Vol. Total
A	≤ 1000
B	≤ 1150
C	≤ 1300
D	≤ 1450
E	≤ 1600
F	> 1600

Opposing Volume (vph)	PCE
≤ 199	1.1
≤ 599	2.0
≤ 799	3.0
≤ 999	4.0
> 1000	5.0

Φ	Movement	Volume (1)	Lane Use Factor (2)	Lane Volume (1)*(2)=(3)	Opposing Lefts (4)	Lefts Lane Use Factor (5)	Left Volume (4)*(5)=(6)	Critical Lane Volume (3)+(6)	*
	NBT	12	1.00	12	281	1.00	281	293	*
	SBR	37	1.00	37	41	1.00	41	78	
	EBT	3789	0.40	1516	81	1.00	81	1597	*
	WBT	1364	0.40	546	73	1.00	73	619	

Remarks: NBR = 0
SBR = 110-73 = 37

* Critical Volume.

AM TOTAL 1890
v/c = 1.18 LOS F

Φ	Movement	Volume (1)	Lane Use Factor (2)	Lane Volume (1)*(2)=(3)	Opposing Lefts (4)	Lefts Lane Use Factor (5)	Left Volume (4)*(5)=(6)	Critical Lane Volume (3)+(6)	*
	NBT	16	1.00	16	311	1.00	311	327	*
	SBT	27	1.00	27	61	1.00	61	88	
	EBT	2370	0.40	948	63	1.00	63	1011	
	WBT	4185	0.40	1674	67	1.00	67	1741	*

Remarks: NBR = 0

* Critical Volume.

PM TOTAL 2068
v/c = 1.29 LOS F

Turning Movement Summary and Level of Service

Count Date: 2025 | Condition: No Build | Design Year: | Computed by: SDB Date: 9/6/02

Location: MD 140 & Gorsuch Rd | Checked by: TAR Date: 10/2/02

URS

AM PEAK HOUR:

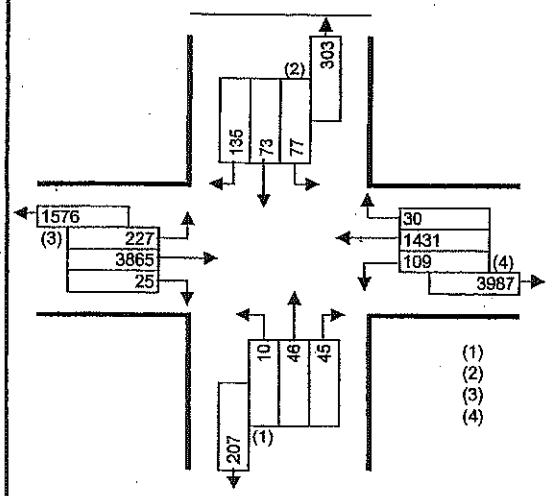

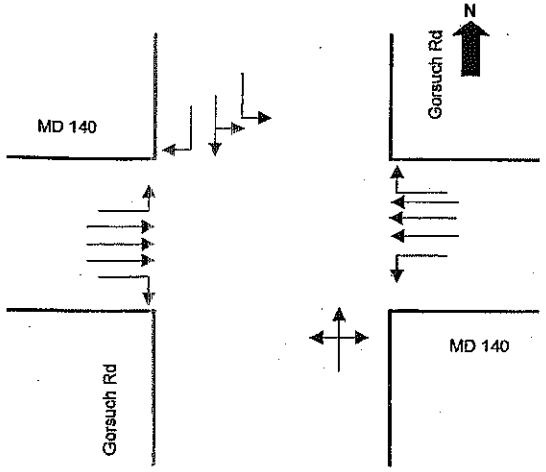

PM PEAK HOUR:

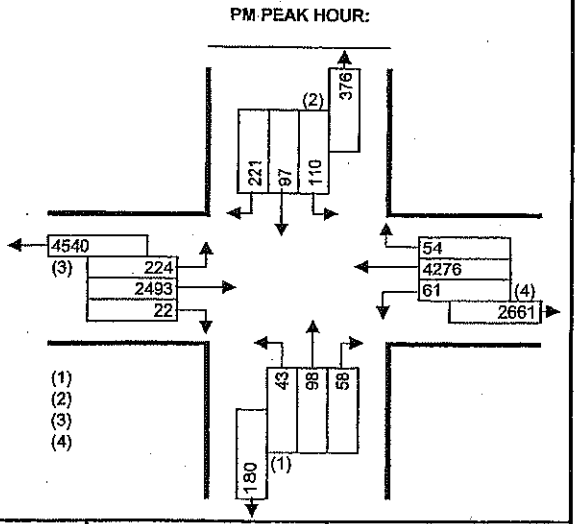

Phasing (Φ)			
1	2	3	4
5	6	7	8

Intersection Control Type: Signal X Stop ____ Ways ____

No. of Lanes		Lane Use Factor
1	=	1.00
2	=	0.55
3	=	0.40
4	=	0.30
Dble. Left	=	0.60
Trpl. Left	=	0.50

Level of Service		Critical Lane Vol. Total
A	≤	1000
B	≤	1150
C	≤	1300
D	≤	1450
E	≤	1600
F	>	1600

Opposing Volume (vph)		PCE
≤	199	1.1
≤	599	2.0
≤	799	3.0
≤	999	4.0
>	1000	5.0

Φ	Movement	Volume (1)	Lane Use Factor (2)	Lane Volume (1)*(2)=(3)	Opposing Lefts (4)	Lefts Lane Use Factor (5)	Left Volume (4)*(5)=(6)	Critical Lane Volume (3)+(6)	*
1	NBTLR	101	1.00	101	0	1.00	0	101	*
2	SBTL	150	0.60	90	0	1.00	0	90	*
3	EBT	3865	0.40	1546	109	1.00	109	1655	*
3	WBT	1431	0.40	572	227	1.00	227	799	

Remarks:

* Critical Volume.

AM TOTAL 1846

v/c = 1.15 LOS F

Φ	Movement	Volume (1)	Lane Use Factor (2)	Lane Volume (1)*(2)=(3)	Opposing Lefts (4)	Lefts Lane Use Factor (5)	Left Volume (4)*(5)=(6)	Critical Lane Volume (3)+(6)	*
1	NBTLR	199	1.00	199	0	1.00	0	199	*
2	SBTL	207	0.60	124	0	1.00	0	124	*
3	EBT	2493	0.40	997	61	1.00	61	1058	
3	WBT	4276	0.40	1710	224	1.00	224	1934	*

Remarks:

* Critical Volume.

PM TOTAL 2258

v/c = 1.41 LOS F

Turning Movement Summary and Level of Service

Count Date: 2025 | Condition: No Build | Design Year: | Computed by: SDB Date: 9/13/02

Location: MD 140 & Malcolm Dr / MD 97 | Checked by: TAR Date: 10/2/02

URS

AM PEAK HOUR:

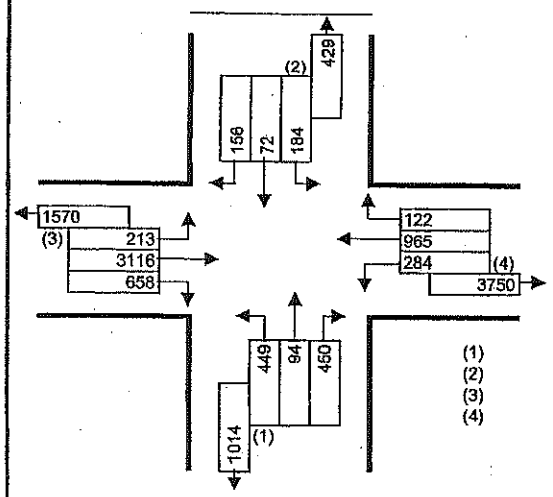

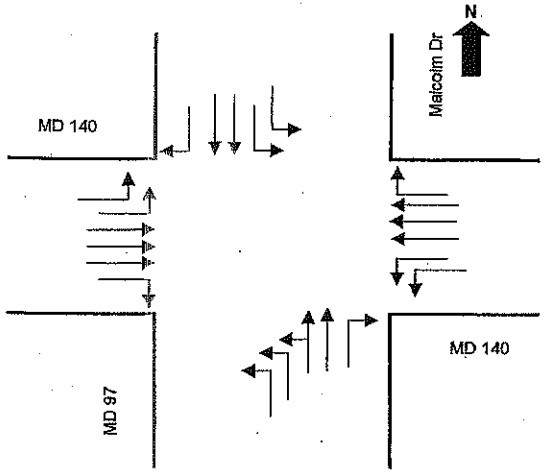

PM PEAK HOUR:

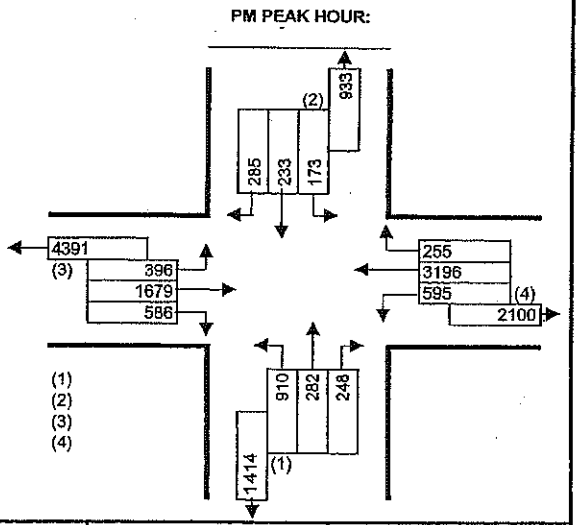

Phasing (Φ)

1	2	3	4
5	6	7	8

Intersection Control Type: Signal X Stop ____ Ways ____

No. of Lanes		Lane Use Factor
1	=	1.00
2	=	0.55
3	=	0.40
4	=	0.30
Dble. Left	=	0.60
Trpl. Left	=	0.50

Level of Service	Critical Lane Vol. Total
A	1000
B	1150
C	1300
D	1450
E	1600
F	1600

Opposing Volume (vph)	PCE
199	1.1
599	2.0
799	3.0
999	4.0
1000	5.0

Φ	Movement	Volume (1)	Lane Use Factor (2)	Lane Volume (1)*(2)=(3)	Opposing Lefts (4)	Lefts Lane Use Factor (5)	Left Volume (4)*(5)=(6)	Critical Lane Volume (3)+(6)	*
1	NBL	449	0.50	225	0	1.00	0	225	
2	SBL	184	0.60	110	0	1.00	0	110	*
3	EBT	3116	0.40	1246	284	0.60	170	1417	*
3	WBT	965	0.40	386	213	0.60	128	514	
1	NBR	280	1.00	280	0	1.00	0	280	*

Remarks: NBR = 450 - (284*0.6) = 280
NBT - won't use shared right turn lane

* Critical Volume.

AM TOTAL 1807

v/c = 1.13 LOS F

Φ	Movement	Volume (1)	Lane Use Factor (2)	Lane Volume (1)*(2)=(3)	Opposing Lefts (4)	Lefts Lane Use Factor (5)	Left Volume (4)*(5)=(6)	Critical Lane Volume (3)+(6)	*
1	NBL	910	0.50	455	0	1.00	0	455	*
2	SBT	233	0.55	128	0	1.00	0	128	*
3	EBT	1679	0.40	672	595	0.60	357	1029	
3	WBT	3196	0.40	1278	396	0.60	238	1516	*

Remarks:
NBT - won't use shared right turn lane

* Critical Volume.

PM TOTAL 2099

v/c = 1.31 LOS F

Turning Movement Summary and Level of Service

Count Date: 2025
Condition: No Build
Design Year:
Computed by: SDB Date: 9/6/02

Location: MD 140 & Leidy Rd / Old Balto. Rd
Checked by: TAR Date: 10/2/02

URS

AM PEAK HOUR:

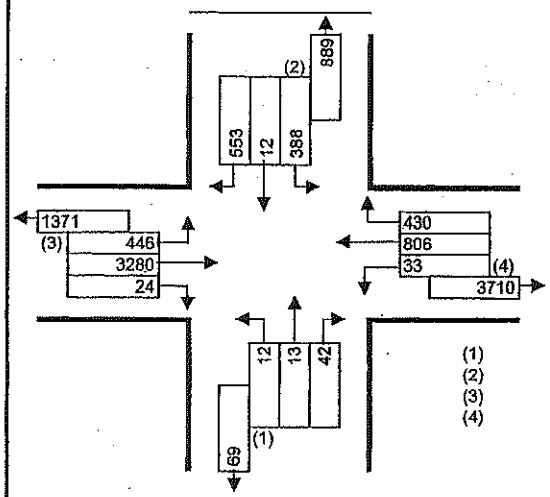

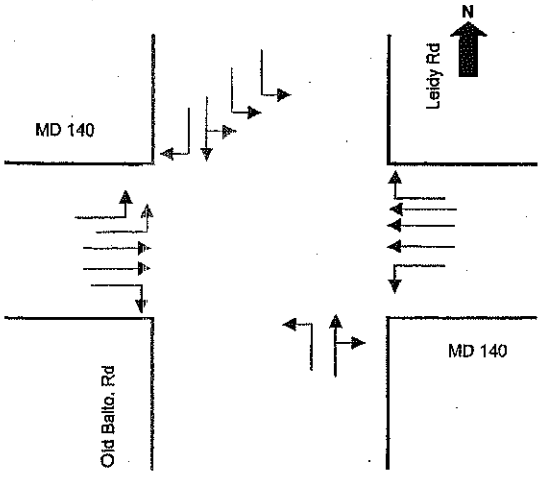

PM PEAK HOUR:

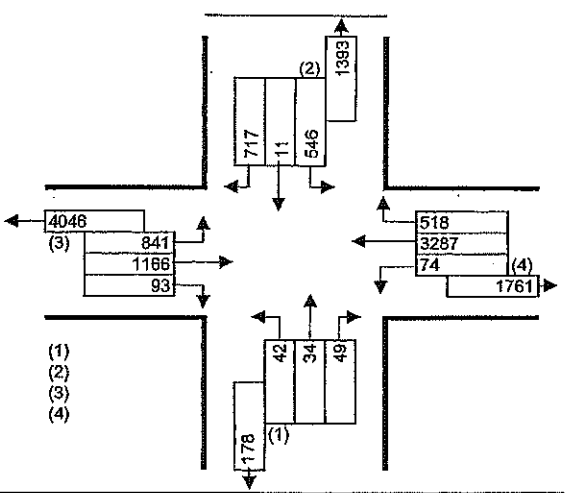

Phasing (Φ)			
1	2	3	4
5	6	7	8

Intersection Control Type:
Signal X Stop _____ Ways _____

No. of Lanes	Lane Use Factor
1	1.00
2	0.55
3	0.40
4	0.30
Dble. Left	0.60
Trpl. Left	0.50

Level of Service	Critical Lane Vol. Total
A	1000
B	1150
C	1300
D	1450
E	1600
F	1600

Opposing Volume (vph)	PCE
199	1.1
599	2.0
799	3.0
999	4.0
1000	5.0

Φ	Movement	Volume (1)	Lane Use Factor (2)	Lane Volume (1)*(2)=(3)	Opposing Lefts (4)	Lefts Lane Use Factor (5)	Left Volume (4)*(5)=(6)	Critical Lane Volume (3)+(6)	*
1	NBTR	55	1.00	55	0	1.00	0	55	*
2	SBR	285	1.00	285	0	1.00	0	285	*
3	EBT	3280	0.55	1804	33	1.00	33	1837	*
3	WBR	430	1.00	430	446	0.60	268	698	
2	SBLT	400	0.50	200	0	1.00	0	200	

Remarks: SBR = 553 - (446*0.6) = 285

* Critical Volume.

AM TOTAL 2177
v/c = 1.36 LOS F

Φ	Movement	Volume (1)	Lane Use Factor (2)	Lane Volume (1)*(2)=(3)	Opposing Lefts (4)	Lefts Lane Use Factor (5)	Left Volume (4)*(5)=(6)	Critical Lane Volume (3)+(6)	*
1	NBTR	83	1.00	83	0	1.00	0	83	*
2	SBR	212	1.00	212	0	1.00	0	212	
3	EBT	1166	0.55	641	74	1.00	74	715	
3	WBT	3287	0.40	1315	841	0.60	505	1819	*
2	SBLT	557	0.50	279	0	1.00	0	279	*

Remarks: SBR = 717 - (841*0.6) = 212

* Critical Volume.

PM TOTAL 2181
v/c = 1.36 LOS F

2025 "NO BUILD" AM & PM PEAK HOURS

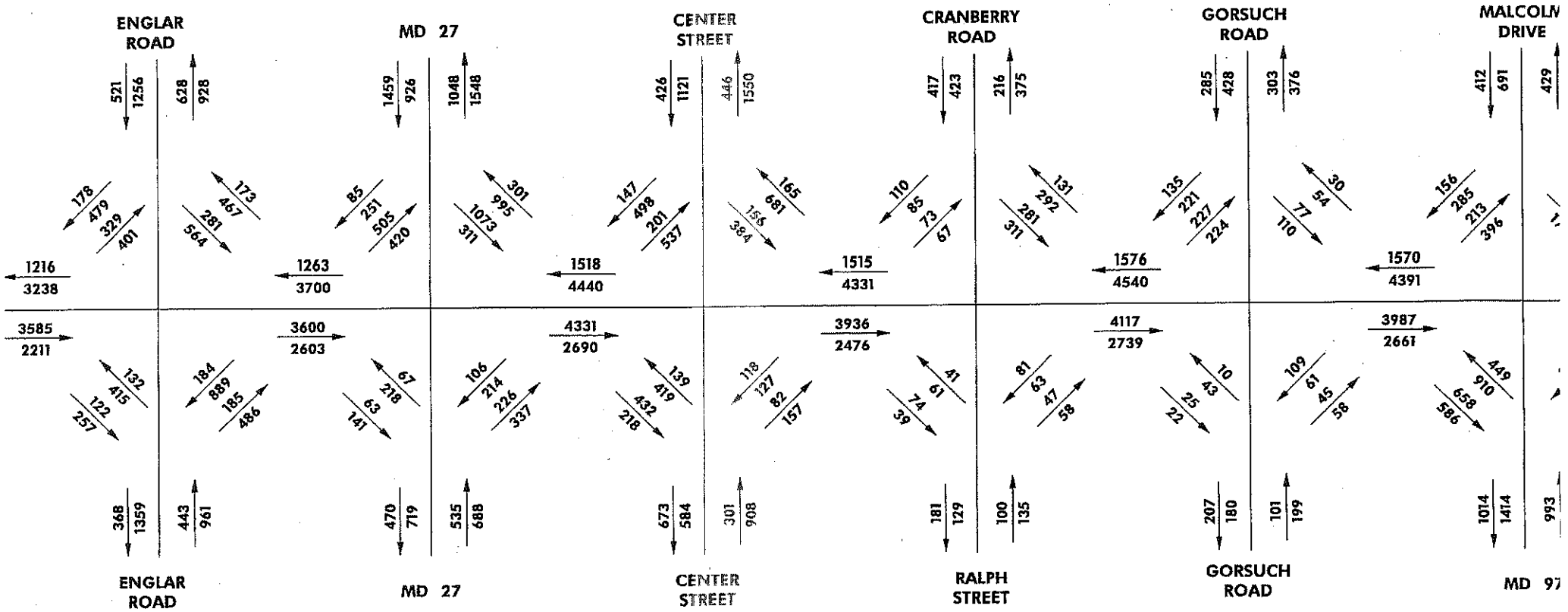

2025 "NO BUILD" AM PK
2025 "NO BUILD" PM PK

WESTMINSTER MD140 INTERCHANGE STUDY

2025 "NO BUILD" AM & PM PEAK HOURS

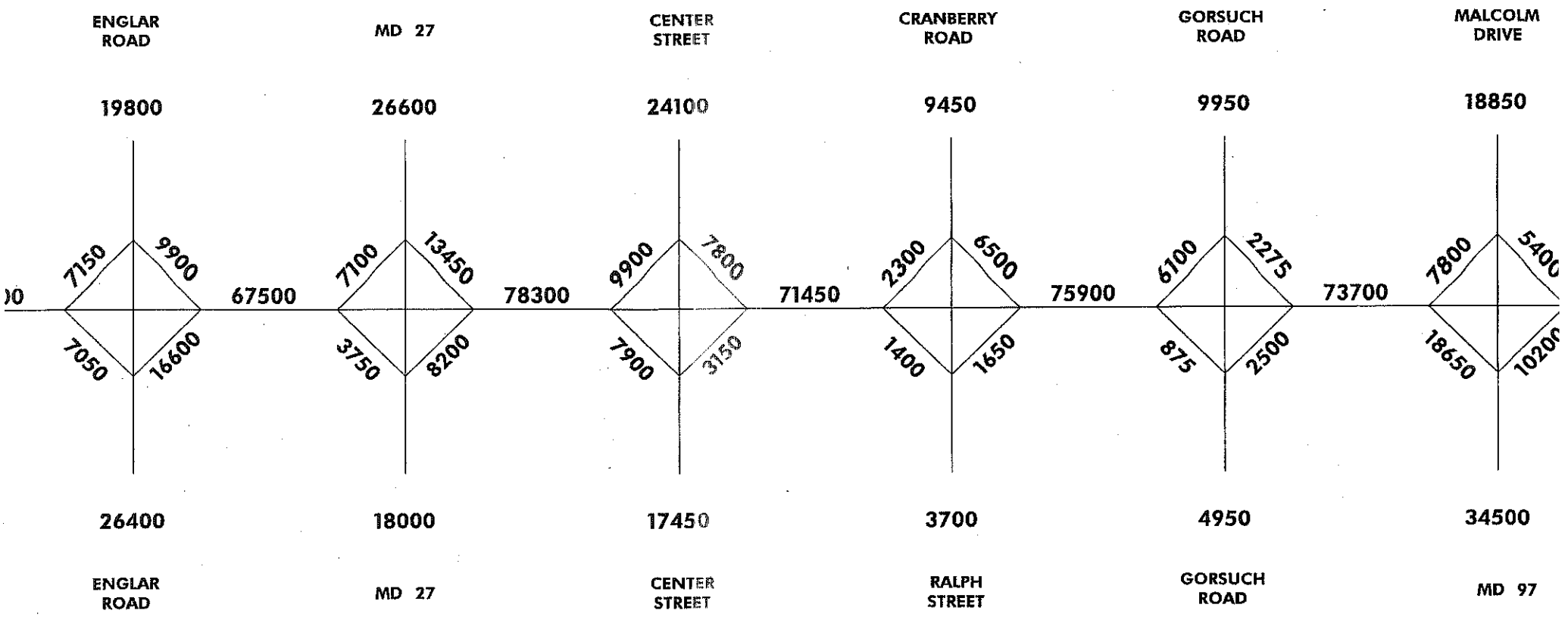

UILD" ADT

WESTMINSTER MD140 INTERCHANGE STUDY

Traffic Data
&
Critical Lane Analysis

Alternate 2 – 2025 TSM/TDM

Turning Movement Summary and Level of Service

Count Date: 2025 | Location: MD 140 @ Sullivan
Condition: TSM
Design Year:
Computed by: RLT | Date: 1/11/2007 | Checked by: TAR | Date: 1/11/2007

URS

AM PEAK HOUR:

PM PEAK HOUR:

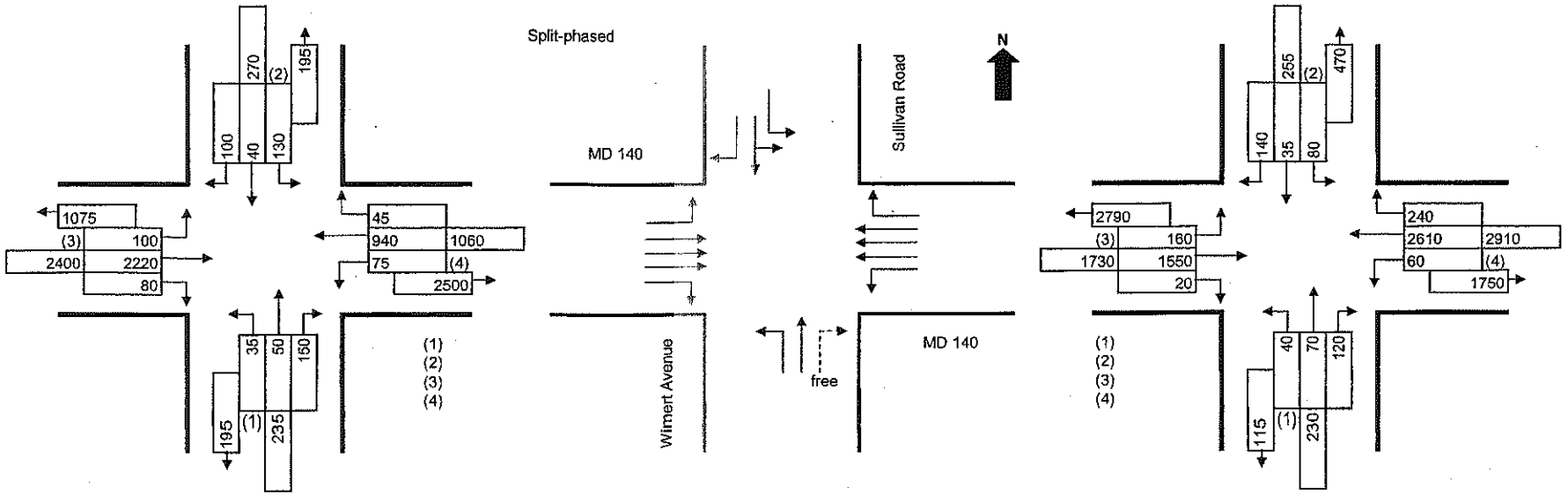

Phasing (Φ)

1	2	3	4
5	6	7	8

Intersection Control Type:
Signal X Stop ____ Ways ____

No. of Lanes		Lane Use Factor
1	=	1.00
2	=	0.55
3	=	0.40
4	=	0.30
Dble. Left	=	0.60
Trpl. Left	=	0.45

Level of Service		Critical Lane Vol. Total
A	≤	1000
B	≤	1150
C	≤	1300
D	≤	1450
E	≤	1600
F	>	1600

Opposing Volume (vph)		PCE
	≤ 199	1.1
	≤ 599	2.0
	≤ 799	3.0
	≤ 999	4.0
	> 1000	5.0

Φ	Movement	Volume (1)	Lane Use Factor (2)	Lane Volume (1)*(2)=(3)	Opposing Lefts (4)	Lefts Lane Use Factor (5)	Left Volume (4)*(5)=(6)	Critical Lane Volume (3)+(6)	*
	NBT	50	1.00	50	0	1.00	0	50	*
	SBTL	170	0.60	102	0	1.00	0	102	*
	EBT	2220	0.40	888	75	1.00	75	963	*
	WBT	940	0.40	376	100	1.00	100	476	

Remarks:
* Critical Volume.

AM TOTAL 1115
v/c = 0.70 LOS B

Φ	Movement	Volume (1)	Lane Use Factor (2)	Lane Volume (1)*(2)=(3)	Opposing Lefts (4)	Lefts Lane Use Factor (5)	Left Volume (4)*(5)=(6)	Critical Lane Volume (3)+(6)	*
	NBT	70	1.00	70	0	1.00	0	70	*
	SBTL	115	0.60	69	0	1.00	0	69	*
	EBT	1550	0.40	620	60	1.00	60	680	
	WBT	2610	0.40	1044	160	1.00	160	1204	*

Remarks:
* Critical Volume.

PM TOTAL 1343
v/c = 0.84 LOS D

Turning Movement Summary and Level of Service

Count Date: 2025 | Location: MD 140 & Englar Rd
Condition: TSM - As Shown on the Alt 2 Map
Design Year:
Computed by: RLT Date: 4/22/2004 | Checked by: TAR Date: 4/22/2004

URS

AM PEAK HOUR:

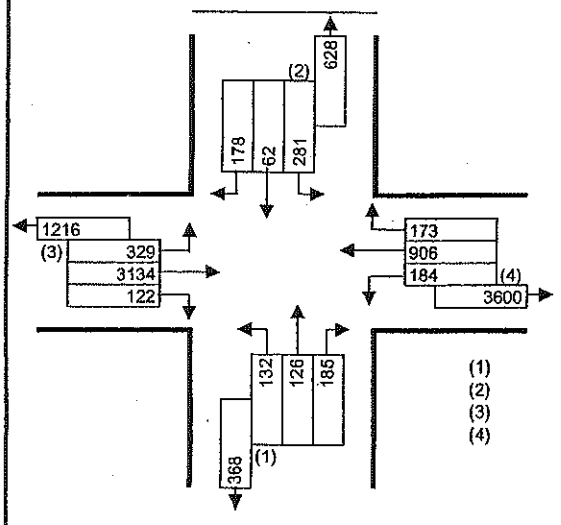

Split Phase Signal Operation

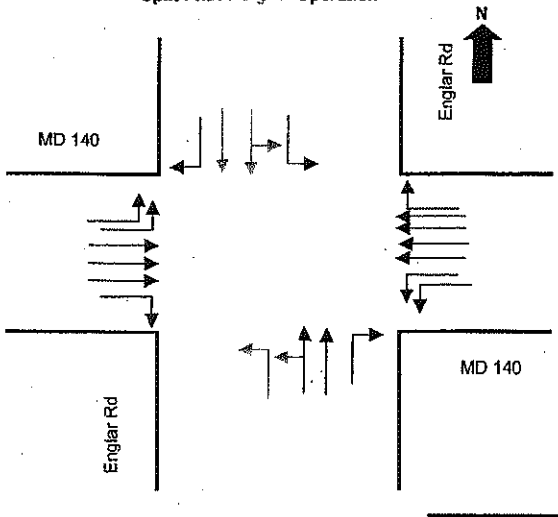

PM PEAK HOUR:

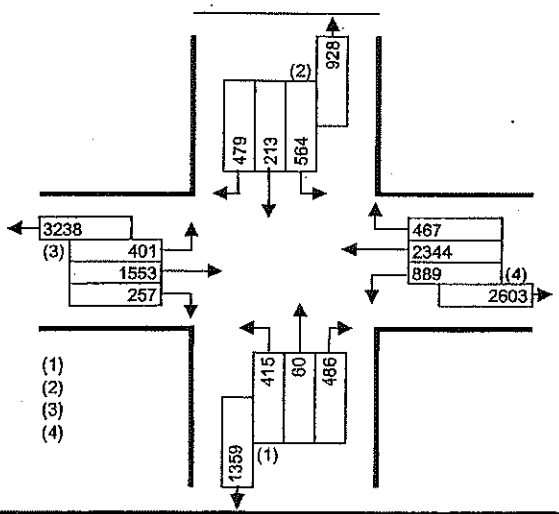

Phasing (Φ)			
1	2	3	4
5	6	7	8

Intersection Control Type: Signal X Stop ____ Ways ____

No. of Lanes		Lane Use Factor
1	=	1.00
2	=	0.55
3	=	0.40
4	=	0.30
Dble. Left	=	0.60
Trpl. Left	=	0.50

Level of Service		Critical Lane Vol. Total
A	≤	1000
B	≤	1150
C	≤	1300
D	≤	1450
E	≤	1600
F	>	1600

Opposing Volume (vph)		PCE
≤	199	1.1
≤	599	2.0
≤	799	3.0
≤	999	4.0
>	1000	5.0

Φ	Movement	Volume (1)	Lane Use Factor (2)	Lane Volume (1)*(2)=(3)	Opposing Lefts (4)	Lefts Lane Use Factor (5)	Left Volume (4)*(5)=(6)	Critical Lane Volume (3)+(6)	*
	NBTL	258	0.50	129	0	1.00	0	129	*
	SBTL	343	0.50	172	0	1.00	0	172	*
	EBT	3134	0.40	1254	184	0.60	110	1364	*
	WBT	906	0.30	272	329	0.60	197	469	

Remarks:

* Critical Volume.

AM TOTAL 1665

v/c = 1.04 **LOS** F

Φ	Movement	Volume (1)	Lane Use Factor (2)	Lane Volume (1)*(2)=(3)	Opposing Lefts (4)	Lefts Lane Use Factor (5)	Left Volume (4)*(5)=(6)	Critical Lane Volume (3)+(6)	*
	NBTL	475	0.50	238	0	1.00	0	238	*
	SBTL	777	0.50	389	0	1.00	0	389	*
	EBT	1553	0.40	621	889	0.60	533	1155	*
	WBT	2344	0.30	703	401	0.60	241	944	

Remarks:

* Critical Volume.

PM TOTAL 1781

v/c = 1.11 **LOS** F

Turning Movement Summary and Level of Service

Count Date:	2025		Location:	MD 140	
Condition:	TSM			&	
Design Year:				Center St	
Computed by:	EWM	Date: 11/16/2002	Checked by:	TAR	Date: 11/21/2002

URS

AM PEAK HOUR:

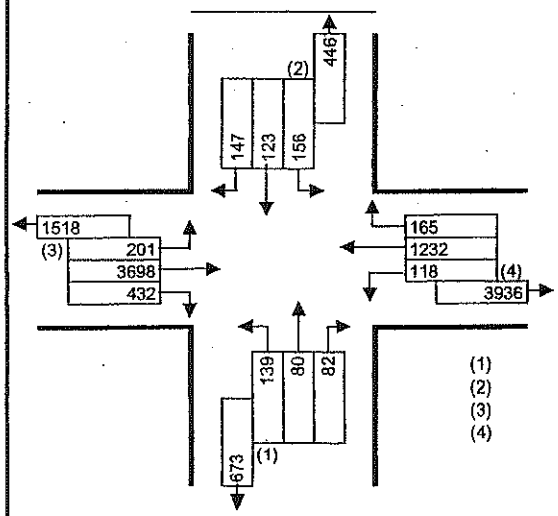

Split Phase Signal Operation

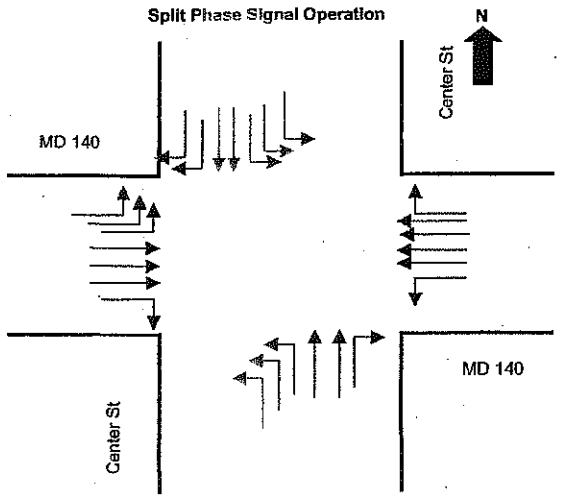

PM PEAK HOUR:

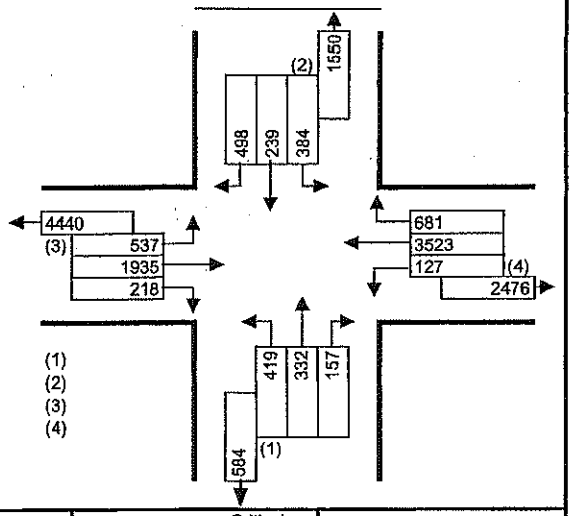

Phasing (Φ)			
1	2	3	4
5	6	7	8

Intersection Control Type: Signal X Stop ____ Ways ____

No. of Lanes		Lane Use Factor
1	=	1.00
2	=	0.55
3	=	0.40
4	=	0.30
Dble. Left	=	0.60
Trpl. Left	=	0.50

Level of Service		Critical Lane Vol. Total
A	≤	1000
B	≤	1150
C	≤	1300
D	≤	1450
E	≤	1600
F	>	1600

Opposing Volume (vph)			PCE
≤	199		1.1
≤	599		2.0
≤	799		3.0
≤	999		4.0
>	1000		5.0

Φ	Movement	Volume (1)	Lane Use Factor (2)	Lane Volume (1)*(2)=(3)	Opposing Lefts (4)	Lefts Lane Use Factor (5)	Left Volume (4)*(5)=(6)	Critical Lane Volume (3)+(6)	*
	NBL	139	0.50	70	0	1.00	0	70	*
	SBL	156	0.50	78	0	1.00	0	78	*
	EBT	3698	0.40	1479	118	1.00	118	1597	*
	WBT	1232	0.30	370	201	0.50	101	470	
				0			0	0	

Remarks:

* Critical Volume.

AM TOTAL 1745

v/c = 1.09 LOS F

Φ	Movement	Volume (1)	Lane Use Factor (2)	Lane Volume (1)*(2)=(3)	Opposing Lefts (4)	Lefts Lane Use Factor (5)	Left Volume (4)*(5)=(6)	Critical Lane Volume (3)+(6)	*
	NBL	419	0.50	210	0	1.00	0	210	*
	SBL	384	0.50	192	0	1.00	0	192	*
	EBT	1935	0.40	774	127	1.00	127	901	
	WBT	3523	0.30	1057	537	0.50	269	1325	*
				0			0	0	

Remarks:

* Critical Volume.

PM TOTAL 1727

v/c = 1.08 LOS F

Turning Movement Summary and Level of Service

Count Date:	2025		Location:	MD 140	
Condition:	TSM - As Shown on the Alt 2 Map			&	
Design Year:				Cranberry Rd / Ralph St	
Computed by:	RLT	Date: 4/26/2004	Checked by:	TAR	Date: 5/6/2004

URS

AM PEAK HOUR:

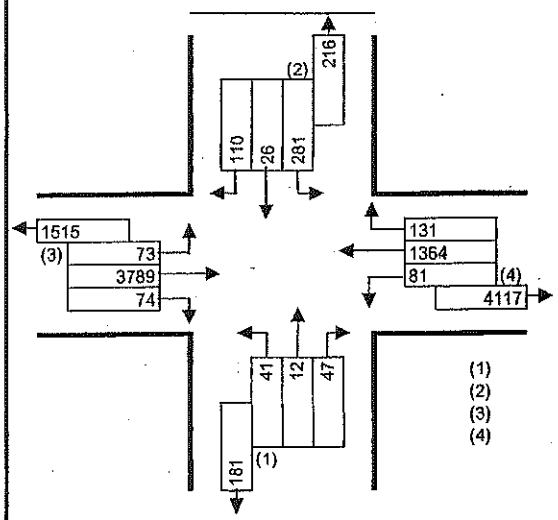

Split Phase Signal Operation

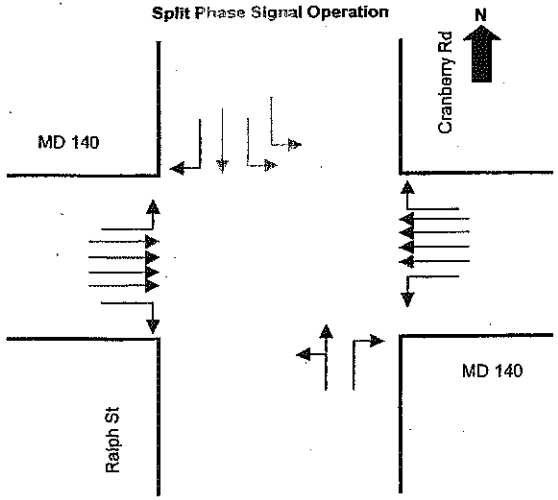

PM PEAK HOUR:

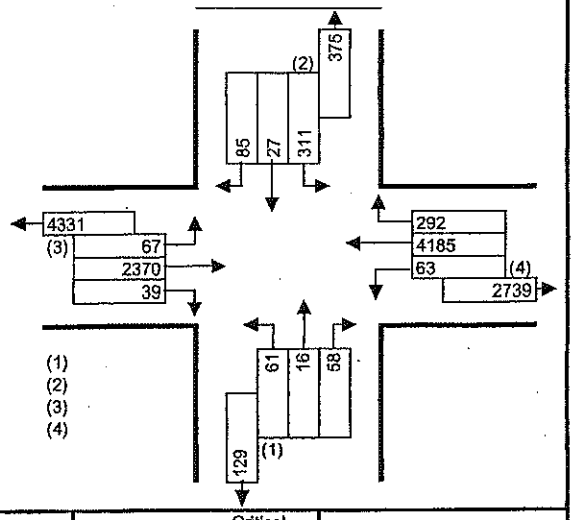

Phasing (Φ)			
1	2	3	4
5	6	7	8

Intersection Control Type:
Signal X Stop _____ Ways _____

No. of Lanes		Lane Use Factor
1	=	1.00
2	=	0.55
3	=	0.40
4	=	0.30
Dble. Left	=	0.60
Trpl. Left	=	0.50

Level of Service		Critical Lane Vol. Total
A	≤	1000
B	≤	1150
C	≤	1300
D	≤	1450
E	≤	1600
F	>	1600

Opposing Volume (vph)		PCE
≤	199	1.1
≤	599	2.0
≤	799	3.0
≤	999	4.0
>	1000	5.0

Φ	Movement	Volume (1)	Lane Use Factor (2)	Lane Volume (1)*(2)=(3)	Opposing Lefts (4)	Lefts Lane Use Factor (5)	Left Volume (4)*(5)=(6)	Critical Lane Volume (3)+(6)	*
	NBTL	53	1.00	53	0	1.00	0	53	*
	SBL	281	0.60	169	0	1.00	0	169	*
	EBT	3789	0.30	1137	81	1.00	81	1218	*
	WBT	1364	0.30	409	73	1.00	73	482	

Remarks:
SBR = 110-73 = 37

* Critical Volume.

AM TOTAL 1439
v/c = 0.90 LOS D

Φ	Movement	Volume (1)	Lane Use Factor (2)	Lane Volume (1)*(2)=(3)	Opposing Lefts (4)	Lefts Lane Use Factor (5)	Left Volume (4)*(5)=(6)	Critical Lane Volume (3)+(6)	*
	NBTL	77	1.00	77	0	1.00	0	77	*
	SBL	311	0.60	187	0	1.00	0	187	*
	EBT	2370	0.30	711	63	1.00	63	774	
	WBT	4185	0.30	1256	67	1.00	67	1323	*

Remarks:
SBR = 85 - 67 = 18

* Critical Volume.

PM TOTAL 1586
v/c = 0.99 LOS E

Turning Movement Summary and Level of Service

Count Date: 2025 | Location: MD 140 & Gorsuch Rd
Condition: TSM - As Shown on the Alt 2 Map
Design Year:
Computed by: RLT Date: 4/26/2004 | Checked by: TAR Date: 5/6/2004

URS

AM PEAK HOUR:

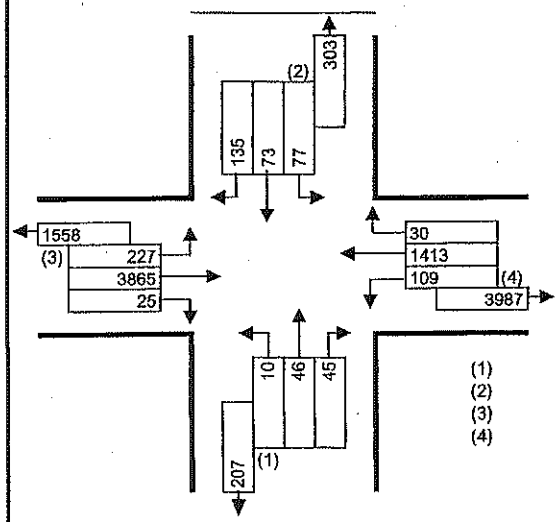

Split Phase Signal Operation

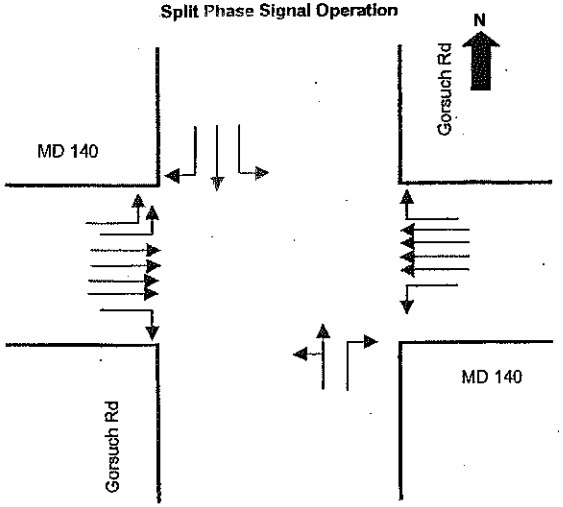

PM PEAK HOUR:

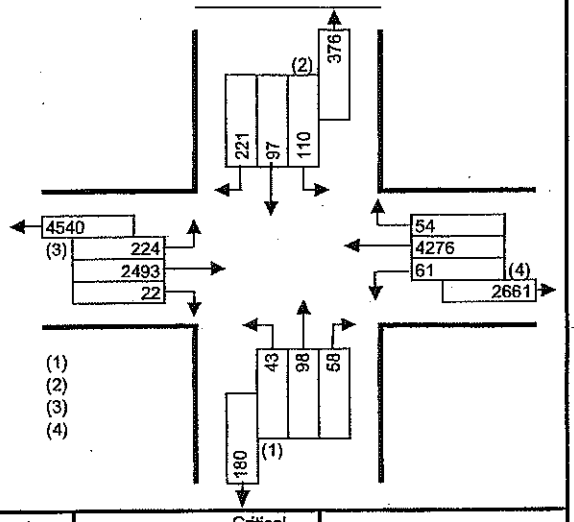

Phasing (Φ)			
1	2	3	4
5	6	7	8

Intersection Control Type:
Signal X Stop ____ Ways ____

No. of Lanes		Lane Use Factor
1	=	1.00
2	=	0.55
3	=	0.40
4	=	0.30
Dble. Left	=	0.60
Trpl. Left	=	0.50

Level of Service		Critical Lane Vol. Total
A	≤	1000
B	≤	1150
C	≤	1300
D	≤	1450
E	≤	1600
F	>	1600

Opposing Volume (vph)		PCE
≤	199	1.1
≤	599	2.0
≤	799	3.0
≤	999	4.0
>	1000	5.0

Φ	Movement	Volume (1)	Lane Use Factor (2)	Lane Volume (1)*(2)=(3)	Opposing Lefts (4)	Lefts Lane Use Factor (5)	Left Volume (4)*(5)=(6)	Critical Lane Volume (3)+(6)	*
	NBTL	56	1.00	56	0	1.00	0	56	*
	SBL	77	1.00	77	0	1.00	0	77	*
	EBT	3865	0.30	1160	109	1.00	109	1269	*
	WBT	1413	0.30	424	227	0.60	136	560	

Remarks: SBR: 135 - 227*0.6 < 0 NBR: 45 - 109 < 0

AM TOTAL 1402
v/c = 0.88 LOS D

* Critical Volume.

Φ	Movement	Volume (1)	Lane Use Factor (2)	Lane Volume (1)*(2)=(3)	Opposing Lefts (4)	Lefts Lane Use Factor (5)	Left Volume (4)*(5)=(6)	Critical Lane Volume (3)+(6)	*
	NBTL	141	1.00	141	0	1.00	0	141	*
	SBL	110	1.00	110	0	1.00	0	110	*
	EBT	2493	0.30	748	61	1.00	61	809	
	WBT	4276	0.30	1283	224	0.60	134	1417	*

Remarks: SBR: 221 - 224*0.6 = 87 NBR: 58 - 61 < 0

PM TOTAL 1668
v/c = 1.04 LOS F

* Critical Volume.

Turning Movement Summary and Level of Service

Count Date: 2025 | Location: MD 140 & Malcolm Dr / MD 97
Condition: TSM
Design Year:
Computed by: EWM Date: 11/16/2002 | Checked by: TAR Date: 11/21/2002

URS

AM PEAK HOUR:

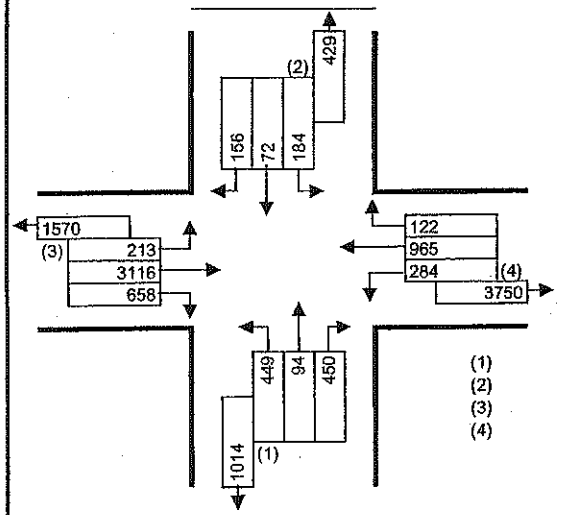

Split Phase Signal Operation

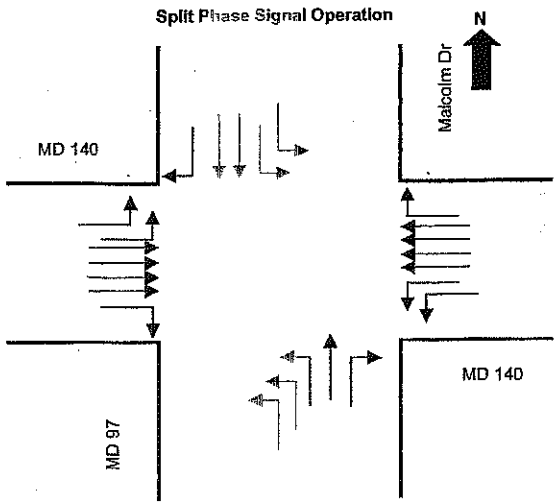

PM PEAK HOUR:

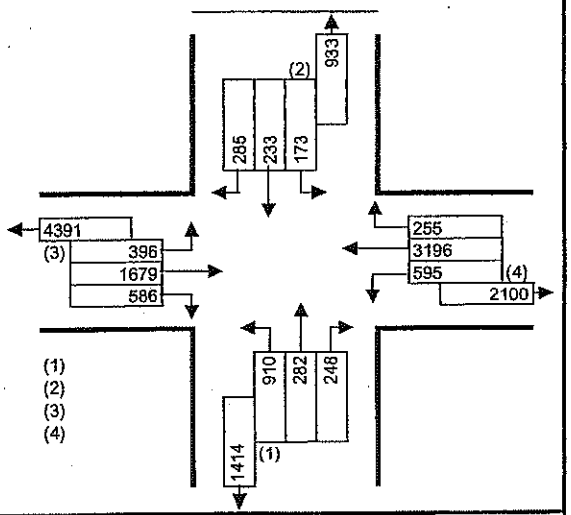

Phasing (Φ)

1	2	3	4
5	6	7	8

Intersection Control Type:
Signal X Stop _____ Ways _____

No. of Lanes		Lane Use Factor
1	=	1.00
2	=	0.55
3	=	0.40
4	=	0.30
Dble. Left	=	0.60
Trpl. Left	=	0.50

Level of Service		Critical Lane Vol. Total
A	≤	1000
B	≤	1150
C	≤	1300
D	≤	1450
E	≤	1600
F	>	1600

Opposing Volume (vph)		PCE
≤	199	1.1
≤	599	2.0
≤	799	3.0
≤	999	4.0
>	1000	5.0

Φ	Movement	Volume (1)	Lane Use Factor (2)	Lane Volume (1)*(2)=(3)	Opposing Lefts (4)	Lefts Lane Use Factor (5)	Left Volume (4)*(5)=(6)	Critical Lane Volume (3)+(6)	*
	NBL	449	0.50	225	0	1.00	0	225	
	SBL	184	0.60	110	0	1.00	0	110	
	EBT	3116	0.30	935	284	0.60	170	1105	*
	WBT	965	0.30	290	213	0.60	128	417	
	NBR	280	1.00	280	0	1.00	0	280	*

Remarks: NBR = 450 - (284*0.6) = 280
SBR=0

* Critical Volume.

AM TOTAL 1496
v/c = 0.93 LOS E

Φ	Movement	Volume (1)	Lane Use Factor (2)	Lane Volume (1)*(2)=(3)	Opposing Lefts (4)	Lefts Lane Use Factor (5)	Left Volume (4)*(5)=(6)	Critical Lane Volume (3)+(6)	*
	NBL	910	0.50	455	0	1.00	0	455	*
	SBL	173	0.60	104	0	1.00	0	104	
	EBT	1679	0.30	504	595	0.60	357	861	
	WBT	3196	0.30	959	396	0.60	238	1196	*
	SBT	233	0.55	128	0	1.00	0	128	*

Remarks:
SBR=47

* Critical Volume.

PM TOTAL 1780
v/c = 1.11 LOS F

Turning Movement Summary and Level of Service

Count Date: 2025 | Location: MD 140 & Market
Condition: TSM - As Shown on the Alt 2 Map
Design Year:
Computed by: RLT Date: 4/20/2004 | Checked by: TAR Date: 4/22/2004

URS

AM PEAK HOUR:

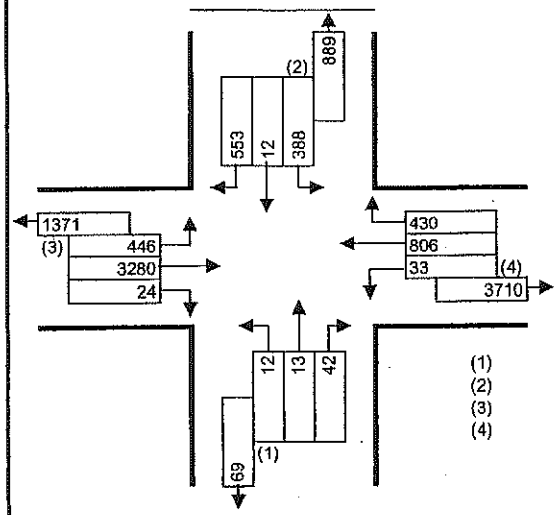

Split Phase Signal Operation

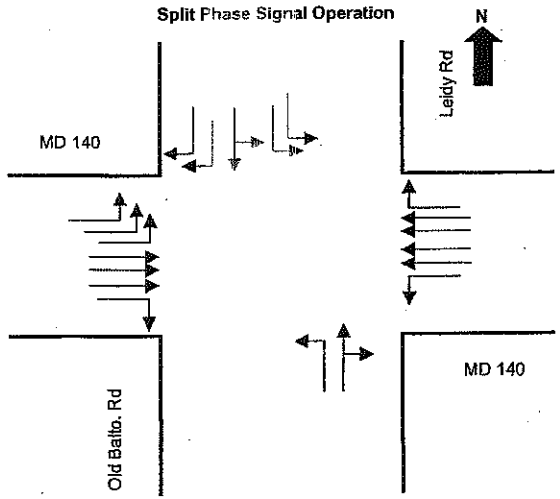

PM PEAK HOUR:

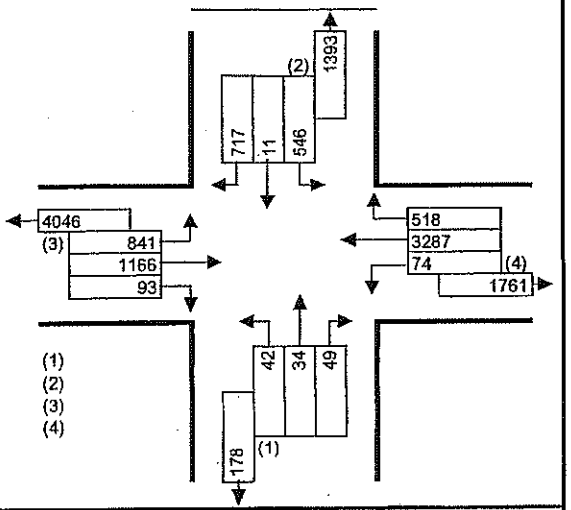

Phasing (Φ)

1	2	3	4
5	6	7	8

Intersection Control Type:
Signal X Stop _____ Ways _____

No. of Lanes		Lane Use Factor
1	=	1.00
2	=	0.55
3	=	0.40
4	=	0.30
Dble. Left	=	0.60
Trpl. Left	=	0.50

Level of Service		Critical Lane Vol. Total
A	≤	1000
B	≤	1150
C	≤	1300
D	≤	1450
E	≤	1600
F	>	1600

Opposing Volume (vph)		PCE
≤	199	1.1
≤	599	2.0
≤	799	3.0
≤	999	4.0
>	1000	5.0

Φ	Movement	Volume (1)	Lane Use Factor (2)	Lane Volume (1)*(2)=(3)	Opposing Lefts (4)	Lefts Lane Use Factor (5)	Left Volume (4)*(5)=(6)	Critical Lane Volume (3)+(6)	*
	NBTR	55	1.00	55	0	1.00	0	55	*
	SBTL	400	0.50	200	0	1.00	0	200	*
	EBT	3280	0.40	1312	33	1.00	33	1345	*
	WBT	806	0.30	242	446	0.50	223	465	

Remarks:
* Critical Volume.

AM TOTAL 1600
v/c = 1.00 LOS E

Φ	Movement	Volume (1)	Lane Use Factor (2)	Lane Volume (1)*(2)=(3)	Opposing Lefts (4)	Lefts Lane Use Factor (5)	Left Volume (4)*(5)=(6)	Critical Lane Volume (3)+(6)	*
	NBTR	83	1.00	83	0	1.00	0	83	*
	SBTL	557	0.50	279	0	1.00	0	279	*
	EBT	1166	0.40	466	74	1.00	74	540	
	WBT	3287	0.30	986	841	0.50	421	1407	*

Remarks:
* Critical Volume.

PM TOTAL 1768
v/c = 1.11 LOS F

Traffic Data
&
Critical Lane Analysis

Alternate 5 – 2025 SPUI

Turning Movement Summary and Level of Service

Count Date: 2025 | Condition: TSM | Design Year: | Computed by: RLT Date: 1/11/2007 | Location: MD 140 @ Sullivan | Checked by: TAR Date: 1/11/2007

URS

AM PEAK HOUR:

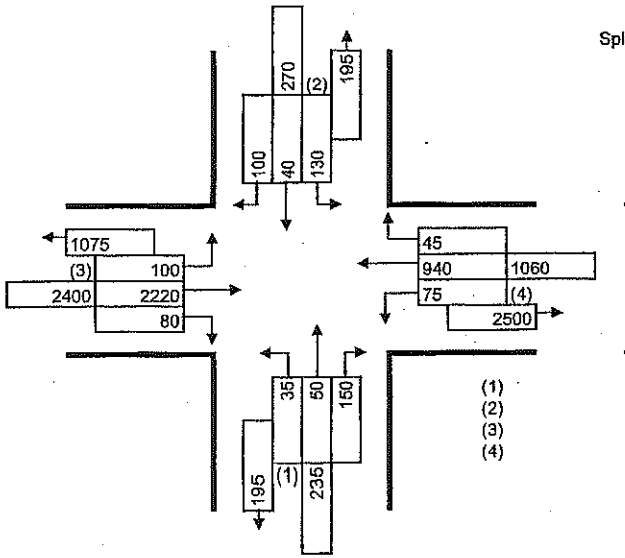

Split-phased

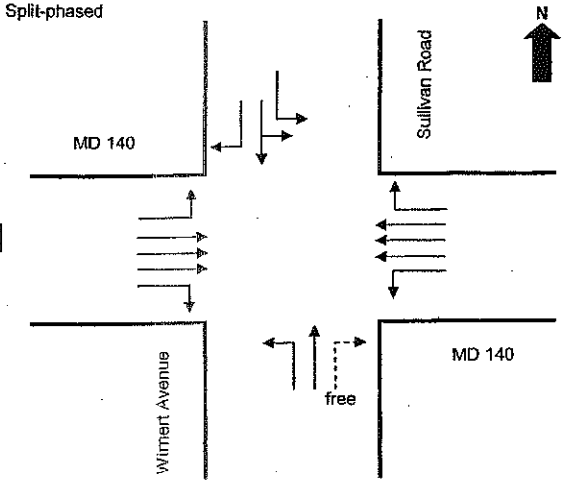

PM PEAK HOUR:

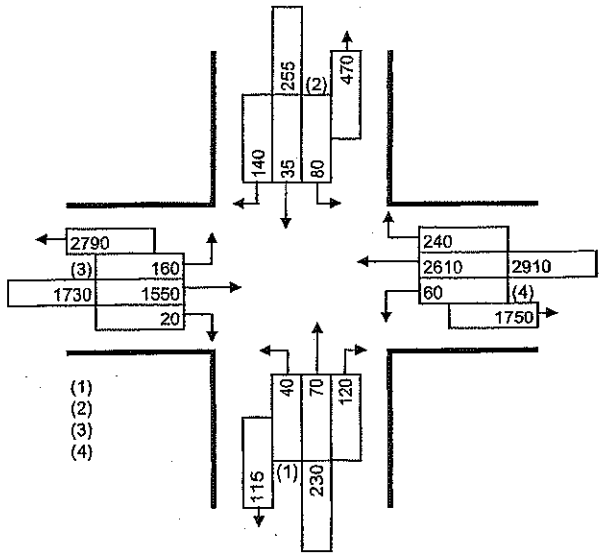

Phasing (Φ)			
1	2	3	4
5	6	7	8

Intersection Control Type:
Signal ___X___ Stop _____ Ways _____

No. of Lanes		Lane Use Factor
1	=	1.00
2	=	0.55
3	=	0.40
4	=	0.30
Dble. Left	=	0.60
Trpl. Left	=	0.45

Level of Service		Critical Lane Vol. Total
A	≤	1000
B	≤	1150
C	≤	1300
D	≤	1450
E	≤	1600
F	>	1600

Opposing Volume (vph)		PCE
≤	199	1.1
≤	599	2.0
≤	799	3.0
≤	999	4.0
>	1000	5.0

Φ	Movement	Volume (1)	Lane Use Factor (2)	Lane Volume (1)*(2)=(3)	Opposing Lefts (4)	Lefts Lane Use Factor (5)	Left Volume (4)*(5)=(6)	Critical Lane Volume (3)+(6)	*
	NBT	50	1.00	50	0	1.00	0	50	*
	SBTL	170	0.60	102	0	1.00	0	102	*
	EBT	2220	0.40	888	75	1.00	75	963	*
	WBT	940	0.40	376	100	1.00	100	476	

Remarks:

* Critical Volume.

AM TOTAL 1115

v/c = 0.70 LOS B

Φ	Movement	Volume (1)	Lane Use Factor (2)	Lane Volume (1)*(2)=(3)	Opposing Lefts (4)	Lefts Lane Use Factor (5)	Left Volume (4)*(5)=(6)	Critical Lane Volume (3)+(6)	*
	NBT	70	1.00	70	0	1.00	0	70	*
	SBTL	115	0.60	69	0	1.00	0	69	*
	EBT	1550	0.40	620	60	1.00	60	680	
	WBT	2610	0.40	1044	160	1.00	160	1204	*

Remarks:

* Critical Volume.

PM TOTAL 1343

v/c = 0.84 LOS D

Turning Movement Summary and Level of Service

Count Date: 2025
Condition: Alt 4 - Single Point Urban Diam.
Design Year:
Computed by: EWM Date: 11/16/02

Location: MD 140 & Englar Rd (N)
Checked by: TAR Date: 11/22/02

URS

AM PEAK HOUR:

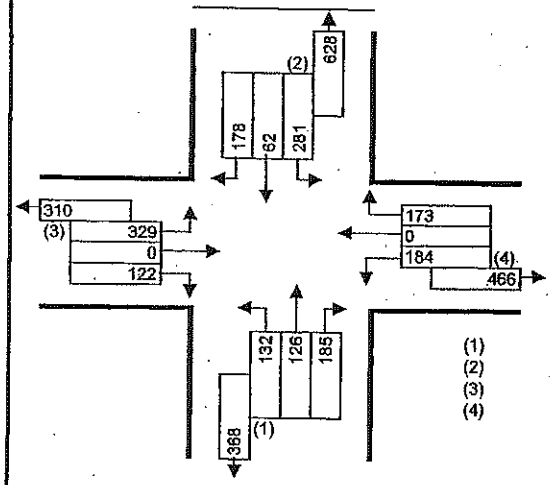

SPUI with concurrent left turns.

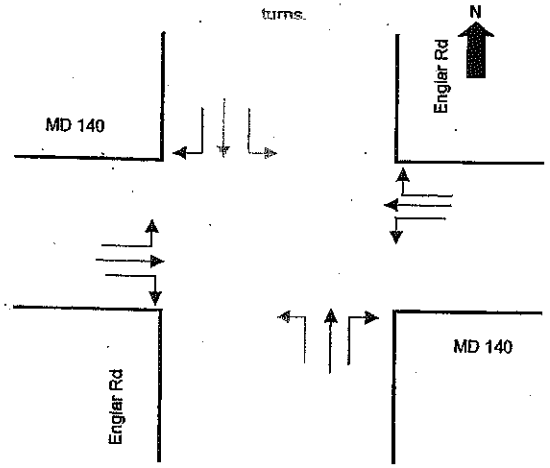

PM PEAK HOUR:

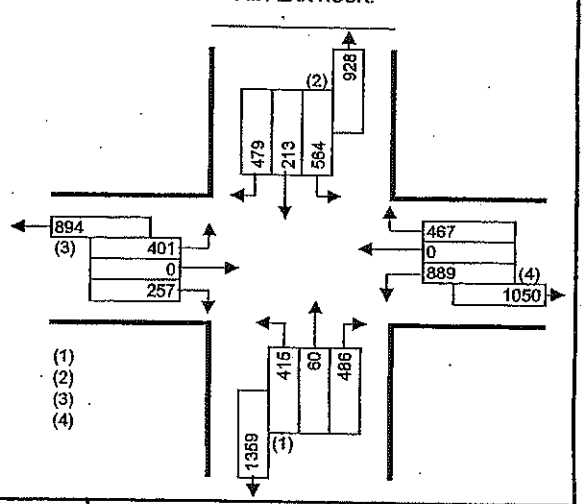

Phasing (Φ)

1	2	3	4
5	6	7	8

Intersection Control Type:
Signal X Stop _____ Ways _____

No. of Lanes		Lane Use Factor
1	=	1.00
2	=	0.55
3	=	0.40
4	=	0.30
Dble. Left	=	0.60
Trpl. Left	=	0.50

Level of Service		Critical Lane Vol. Total
A	≤	1000
B	≤	1150
C	≤	1300
D	≤	1450
E	≤	1600
F	>	1600

Opposing Volume (vph)		PCE
≤ 199		1.1
≤ 599		2.0
≤ 799		3.0
≤ 999		4.0
> 1000		5.0

Φ	Movement	Volume (1)	Lane Use Factor (2)	Lane Volume (1)*(2)=(3)	Opposing Lefts (4)	Lefts Lane Use Factor (5)	Left Volume (4)*(5)=(6)	Critical Lane Volume (3)+(6)	*
1	NBT	126	1.00	126	281	1.00	281	407	*
1	SBT	62	1.00	62	132	1.00	132	194	
2	EBR	11	1.00	11	184	1.00	184	195	
2	WBR	0	1.00	0	329	1.00	329	329	*
				0	0	1.00	0	0	

Remarks:
* Critical Volume.

AM TOTAL 736
v/c = 0.46 LOS A

Φ	Movement	Volume (1)	Lane Use Factor (2)	Lane Volume (1)*(2)=(3)	Opposing Lefts (4)	Lefts Lane Use Factor (5)	Left Volume (4)*(5)=(6)	Critical Lane Volume (3)+(6)	*
1	NBT	60	1.00	60	564	1.00	564	624	
1	SBT	213	1.00	213	415	1.00	415	628	*
2	EBR	0	1.00	0	889	1.00	889	889	*
2	WBR	0	1.00	0	401	1.00	401	401	
1	SBR	78	1.00	78	415	1.00	415	493	

Remarks:
* Critical Volume.

PM TOTAL 1517
v/c = 0.95 LOS E

Turning Movement Summary and Level of Service

Count Date: 2025
Condition: Alt 4 - Single Point Urban Diam.
Design Year:
Computed by: EWM Date: 11/16/02

Location: MD 140 & Center St (N)
Checked by: TAR Date: 11/22/02

URS

AM PEAK HOUR:

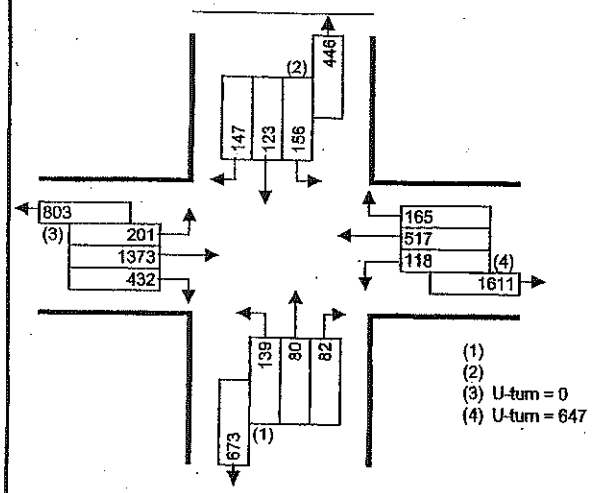

(1)
(2)
(3) U-turn = 0
(4) U-turn = 647

SPUI with concurrent left turns.

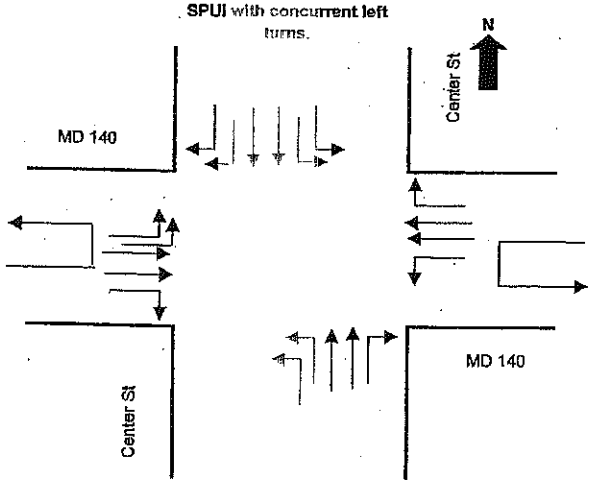

PM PEAK HOUR:

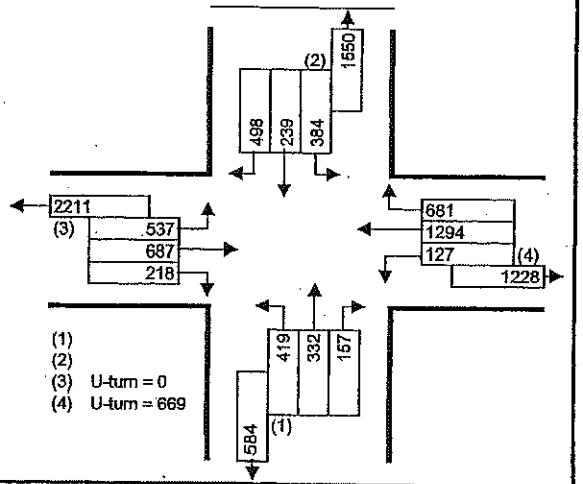

(1)
(2)
(3) U-turn = 0
(4) U-turn = 669

Phasing (Φ)

1	2	3	4
5	6	7	8

Intersection Control Type:
Signal X Stop ____ Ways ____

No. of Lanes		Lane Use Factor
1	=	1.00
2	=	0.55
3	=	0.40
4	=	0.30
Dble. Left	=	0.60
Trpl. Left	=	0.50

Level of Service		Critical Lane Vol. Total
A	≤	1000
B		1150
C		1300
D		1450
E		1600
F	>	1600

Opposing Volume (vph)		PCE
≤	199	1.1
	599	2.0
	799	3.0
	999	4.0
>	1000	5.0

Φ	Movement	Volume (1)	Lane Use Factor (2)	Lane Volume (1)*(2)=(3)	Opposing Lefts (4)	Lefts Lane Use Factor (5)	Left Volume (4)*(5)=(6)	Critical Lane Volume (3)+(6)	*
1	NBT	80	0.55	44	156	0.60	94	138	
1	SBT	123	0.55	68	139	0.60	83	151	*
2	EBT	1373	0.55	755	118	1.00	118	873	*
2	WBT	517	0.55	284	201	0.60	121	405	
2	EBT w/U	1373	0.55	755	647	1.00	647	1402	

Remarks: If WB U-turn is not given free entry, it becomes critical
CLV then = 1553

* Critical Volume.

AM TOTAL 1024
v/c = 0.64 LOS B

Φ	Movement	Volume (1)	Lane Use Factor (2)	Lane Volume (1)*(2)=(3)	Opposing Lefts (4)	Lefts Lane Use Factor (5)	Left Volume (4)*(5)=(6)	Critical Lane Volume (3)+(6)	*
1	NBT	332	0.55	183	384	0.60	230	413	*
1	SBT	239	0.55	131	419	0.60	251	383	
2	EBT	687	0.55	378	127	1.00	127	505	
2	WBT	1294	0.55	712	537	0.60	322	1034	*
2	EBT w/U	687	0.55	378	669	1.00	669	1047	

Remarks: If WB U-turn is not given free entry, it becomes critical
CLV then = 1460

* Critical Volume.

PM TOTAL 1447
v/c = 0.90 LOS D

Turning Movement Summary and Level of Service

Count Date: 2025
Condition: Alt 4
Design Year:
Computed by: EWM Date: 11/16/02

Location: MD 140 & Cranberry Rd / Ralph St (N)
Checked by: TAR Date: 11/21/02

URS

AM PEAK HOUR:

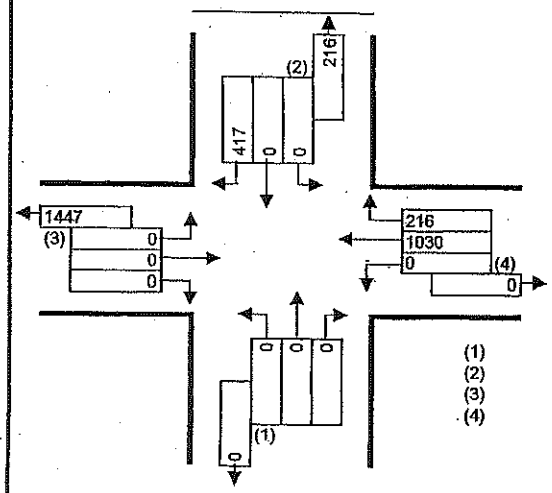

SBR has its own receiving lane heading west

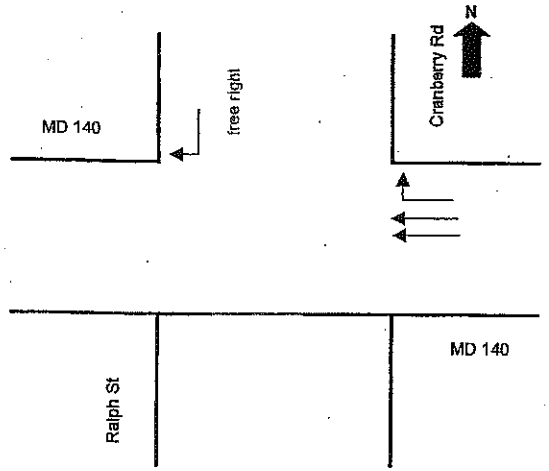

PM PEAK HOUR:

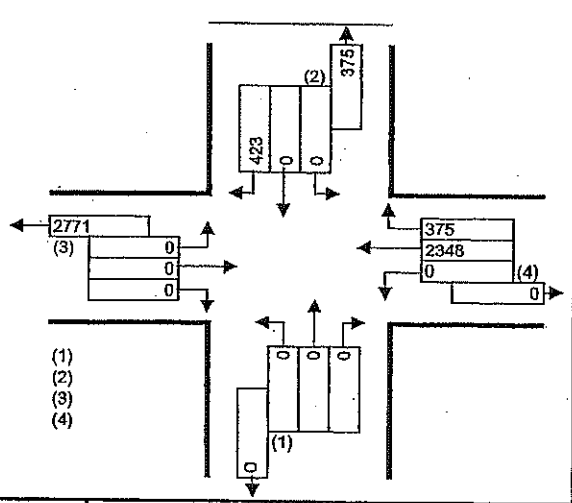

Phasing (Φ)

1	2	3	4
5	6	7	8

Intersection Control Type:
Signal X Stop ____ Ways ____

No. of Lanes		Lane Use Factor
1	=	1.00
2	=	0.55
3	=	0.40
4	=	0.30
Dble. Left	=	0.60
Trpl. Left	=	0.50

Level of Service		Critical Lane Vol. Total
A	≤	1000
B	≤ ≤	1150
C	≤ ≤	1300
D	≤ ≤	1450
E	≤ ≤	1600
F	> ≤	1600

Opposing Volume (vph)		PCE
≤	199	1.1
≤ ≤	599	2.0
≤ ≤	799	3.0
≤ ≤	999	4.0
>	1000	5.0

Φ	Movement	Volume (1)	Lane Use Factor (2)	Lane Volume (1)*(2)=(3)	Opposing Lefts (4)	Lefts Lane Use Factor (5)	Left Volume (4)*(5)=(6)	Critical Lane Volume (3)+(6)	*
	SBR	417	1.00	417	0	1.00	0	417	
	WBT	1030	0.55	567	0	1.00	0	567	*
				0			0	0	
				0			0	0	

Remarks:
* Critical Volume.

AM TOTAL 567
v/c = 0.35 LOS A

Φ	Movement	Volume (1)	Lane Use Factor (2)	Lane Volume (1)*(2)=(3)	Opposing Lefts (4)	Lefts Lane Use Factor (5)	Left Volume (4)*(5)=(6)	Critical Lane Volume (3)+(6)	*
	SBR	423	1.00	423	0	1.00	0	423	
	WBT	2348	0.55	1291	0	1.00	0	1291	*
				0			0	0	
				0			0	0	

Remarks:
* Critical Volume.

PM TOTAL 1291
v/c = 0.81 LOS C

Turning Movement Summary and Level of Service

Count Date: 2025
Condition: Alt 4
Design Year:
Computed by: EWM Date: 11/16/02

Location: MD 140 & Cranberry Rd / Ralph St (S)
Checked by: TAR Date: 11/21/02

URS

AM PEAK HOUR:

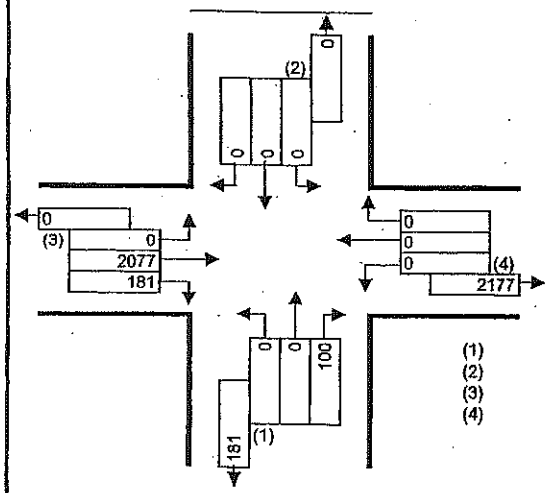

NBR has its own receiving lane heading east

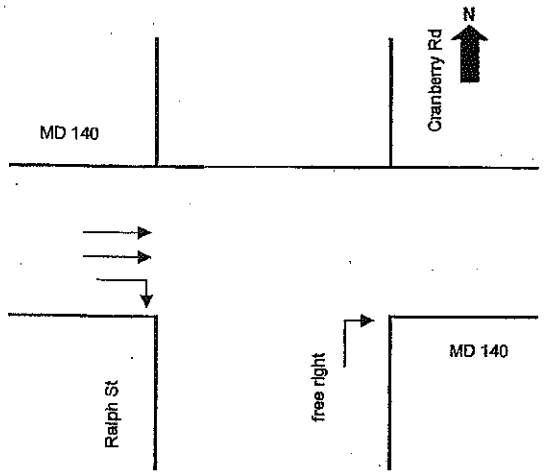

PM PEAK HOUR:

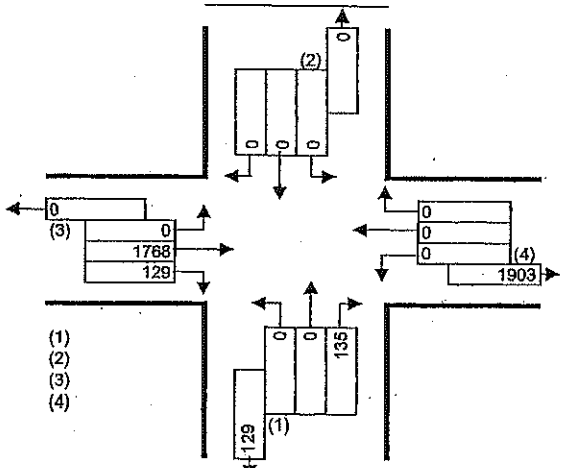

Phasing (Φ)

1	2	3	4
5	6	7	8

Intersection Control Type:
Signal X Stop ____ Ways ____

No. of Lanes		Lane Use Factor
1	=	1.00
2	=	0.55
3	=	0.40
4	=	0.30
Dble. Left	=	0.60
Trpl. Left	=	0.50

Level of Service		Critical Lane Vol. Total
A	≤	1000
B	≤	1150
C	≤	1300
D	≤	1450
E	≤	1600
F	>	1600

Opposing Volume (vph)		PCE
≤	199	1.1
≤	599	2.0
≤	799	3.0
≤	999	4.0
>	1000	5.0

Φ	Movement	Volume (1)	Lane Use Factor (2)	Lane Volume (1)*(2)=(3)	Opposing Lefts (4)	Lefts Lane Use Factor (5)	Left Volume (4)*(5)=(6)	Critical Lane Volume (3)+(6)	*
	NBR	100	1.00	100	0	1.00	0	100	
	EBT	2077	0.55	1142	0	1.00	0	1142	*
				0			0	0	
				0			0	0	

Remarks:
* Critical Volume.

AM TOTAL 1142
v/c = 0.71 LOS B

Φ	Movement	Volume (1)	Lane Use Factor (2)	Lane Volume (1)*(2)=(3)	Opposing Lefts (4)	Lefts Lane Use Factor (5)	Left Volume (4)*(5)=(6)	Critical Lane Volume (3)+(6)	*
	NBR	135	1.00	135	0	1.00	0	135	
	EBT	1768	0.55	972	0	1.00	0	972	*
				0			0	0	
				0			0	0	

Remarks:
* Critical Volume.

PM TOTAL 972
v/c = 0.61 LOS A

Turning Movement Summary and Level of Service

Count Date: 2025
Condition: Alt 4
Design Year:
Computed by: EWM Date: 11/16/02

Location: MD 140 & Gorsuch Rd (N)
Checked by: TAR Date: 11/21/02

URS

AM PEAK HOUR:

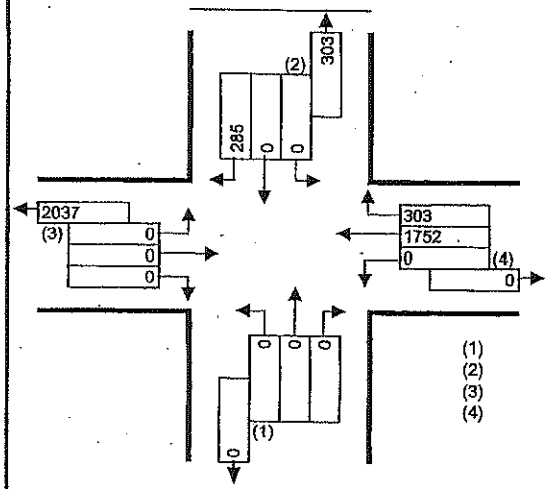

SBR has its own receiving lane

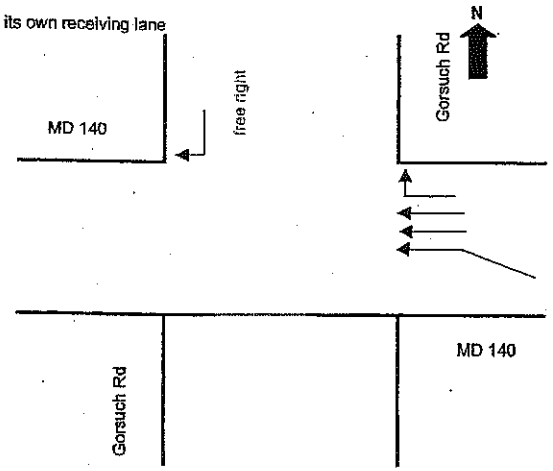

PM PEAK HOUR:

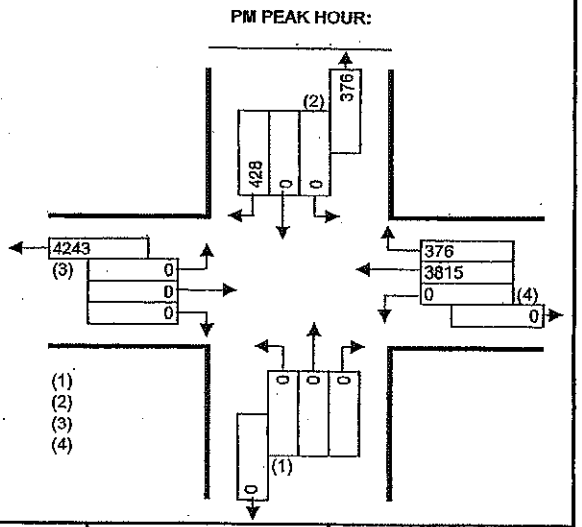

Lane balance issues westbound from slip ramp.

Intersection Control Type:
Signal ___X___ Stop _____ Ways _____

Phasing (Φ)

1	2	3	4
5	6	7	8

No. of Lanes		Lane Use Factor
1	=	1.00
2	=	0.55
3	=	0.40
4	=	0.30
Dble. Left	=	0.60
Trpl. Left	=	0.50

Level of Service		Critical Lane Vol. Total
A	≤	1000
B	≤	1150
C	≤	1300
D	≤	1450
E	≤	1600
F	>	1600

Opposing Volume (vph)		PCE
≤ 199		1.1
≤ 599		2.0
≤ 799		3.0
≤ 999		4.0
> 1000		5.0

Φ	Movement	Volume (1)	Lane Use Factor (2)	Lane Volume (1)*(2)=(3)	Opposing Lefts (4)	Lefts Lane Use Factor (5)	Left Volume (4)*(5)=(6)	Critical Lane Volume (3)+(6)	*
	SBR	285	1.00	285	0	1.00	0	285	
	WBT	1752	0.40	701	0	1.00	0	701	*
				0			0	0	
				0			0	0	

Remarks: WBR - is exclusive

* Critical Volume.

AM TOTAL 701

v/c = 0.44 LOS A

Φ	Movement	Volume (1)	Lane Use Factor (2)	Lane Volume (1)*(2)=(3)	Opposing Lefts (4)	Lefts Lane Use Factor (5)	Left Volume (4)*(5)=(6)	Critical Lane Volume (3)+(6)	*
	SBR	428	1.00	428	0	1.00	0	428	
	WBT	3815	0.40	1526	0	1.00	0	1526	*
				0			0	0	
				0			0	0	

Remarks:

* Critical Volume.

PM TOTAL 1526

v/c = 0.95 LOS E

Turning Movement Summary and Level of Service

Count Date: 2025
Condition: Alt 4
Design Year:
Computed by: EWM Date: 11/16/02
Location: MD 140 & Gorsuch Rd (S)
Checked by: TAR Date: 11/21/02

URS

AM PEAK HOUR:

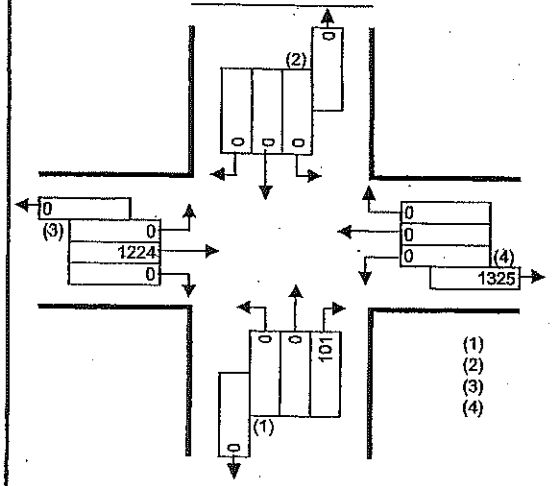

This location is downstream from the slip ramp entering thru-trips.

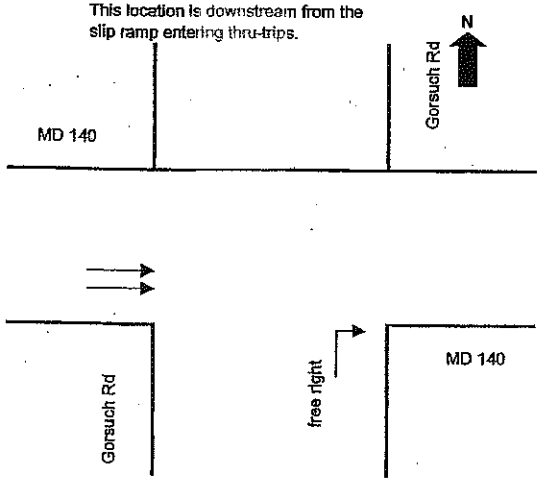

PM PEAK HOUR:

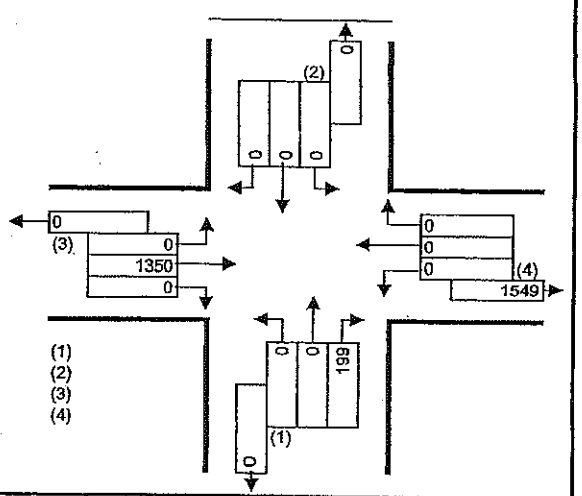

Phasing (Φ)

1	2	3	4
5	6	7	8

Intersection Control Type:
Signal X Stop ____ Ways ____

No. of Lanes		Lane Use Factor
1	=	1.00
2	=	0.55
3	=	0.40
4	=	0.30
Dble. Left	=	0.60
Trpl. Left	=	0.50

Level of Service		Critical Lane Vol. Total
A	≤	1000
B	≤	1150
C	≤	1300
D	≤	1450
E	≤	1600
F	>	1600

Opposing Volume (vph)		PCE
≤	199	1.1
≤	599	2.0
≤	799	3.0
≤	999	4.0
>	1000	5.0

Φ	Movement	Volume (1)	Lane Use Factor (2)	Lane Volume (1)*(2)=(3)	Opposing Lefts (4)	Lefts Lane Use Factor (5)	Left Volume (4)*(5)=(6)	Critical Lane Volume (3)+(6)	*
	NBR	101	1.00	101	0	1.00	0	101	
	EBT	1224	0.55	673	0	1.00	0	673	*
				0			0	0	
				0			0	0	

Remarks:
* Critical Volume.

AM TOTAL 673
v/c = 0.42 LOS A

Φ	Movement	Volume (1)	Lane Use Factor (2)	Lane Volume (1)*(2)=(3)	Opposing Lefts (4)	Lefts Lane Use Factor (5)	Left Volume (4)*(5)=(6)	Critical Lane Volume (3)+(6)	*
	NBR	199	1.00	199	0	1.00	0	199	
	EBT	1350	0.55	743	0	1.00	0	743	*
				0			0	0	
				0			0	0	

Remarks:
* Critical Volume.

PM TOTAL 743
v/c = 0.46 LOS A

Turning Movement Summary and Level of Service

Count Date: 2025
Condition: Alt 4 - Single Point Urban Diam.
Design Year:
Computed by: EWM Date: 11/16/02

Location: MD 140 & Malcolm Dr / MD 97 (N)
Checked by: TAR Date: 11/22/02

URS

AM PEAK HOUR:

SPUI with concurrent left turns.

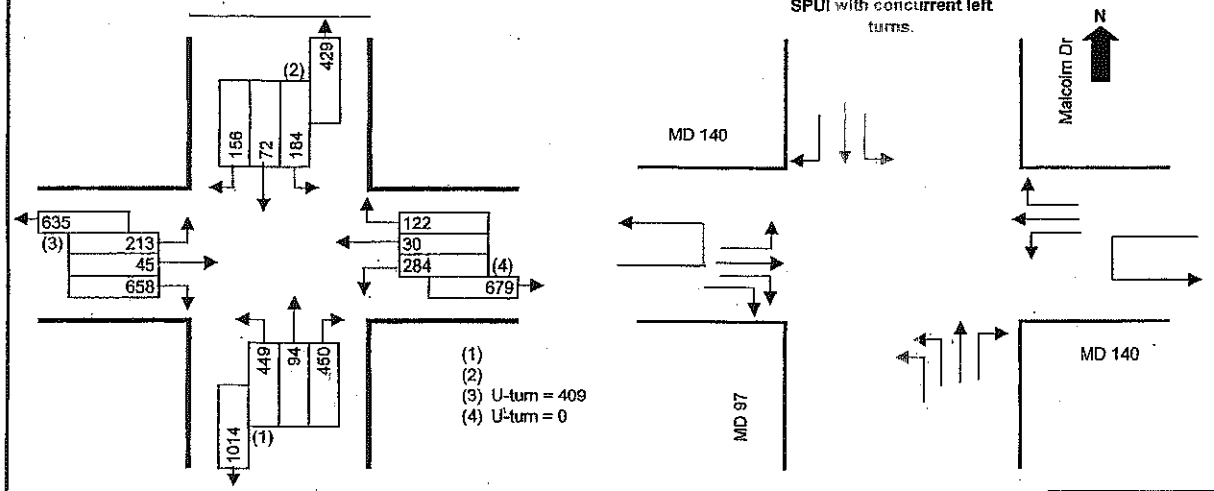

PM PEAK HOUR:

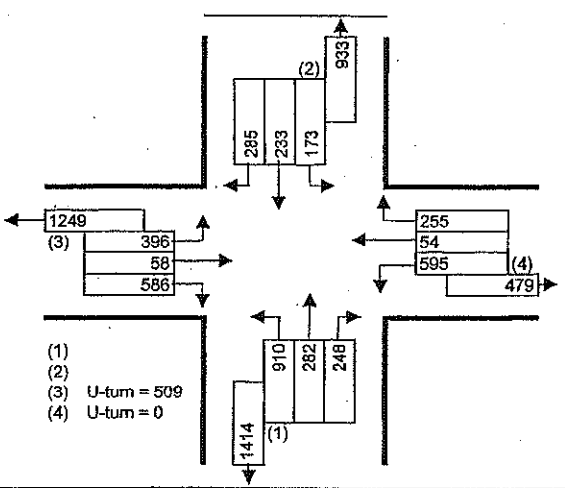

Phasing (Φ)			
1	2	3	4
5	6	7	8

Intersection Control Type:
Signal X Stop ____ Ways ____

No. of Lanes		Lane Use Factor
1	=	1.00
2	=	0.55
3	=	0.40
4	=	0.30
Dble. Left	=	0.60
Trpl. Left	=	0.50

Level of Service	Critical Lane Vol. Total
A	≤ 1000
B	1150
C	1300
D	1450
E	1600
F	> 1600

Opposing Volume (vph)	PCE
≤ 199	1.1
≤ 599	2.0
≤ 799	3.0
≤ 999	4.0
> 1000	5.0

Φ	Movement	Volume (1)	Lane Use Factor (2)	Lane Volume (1)*(2)=(3)	Opposing Lefts (4)	Lefts Lane Use Factor (5)	Left Volume (4)*(5)=(6)	Critical Lane Volume (3)+(6)	*
1	NBT	94	1.00	94	184	1.00	184	278	
1	SBT	72	1.00	72	449	0.60	269	341	
2	EBT	45	1.00	45	284	1.00	284	329	
2	WBT	30	1.00	30	213	1.00	213	243	
2	EBR	126	1.00	126	284	1.00	284	410	*
2	WBT w/u	30	1.00	30	409	1.00	409	439	
1	NBR	166	1.00	166	184	1	184	350	

Remarks: EBR = (658*.6) - 269 = 126
NBR = 450 - 284 = 166
If EBU is considered critical, CLV = 789
* Critical Volume.

AM TOTAL 760
v/c = 0.48 LOS A

Φ	Movement	Volume (1)	Lane Use Factor (2)	Lane Volume (1)*(2)=(3)	Opposing Lefts (4)	Lefts Lane Use Factor (5)	Left Volume (4)*(5)=(6)	Critical Lane Volume (3)+(6)	*
1	NBT	282	1.00	282	173	1.00	173	455	
1	SBT	233	1.00	233	910	0.60	546	779	*
2	EBT	58	1.00	58	595	1.00	595	653	*
2	WBT	54	1.00	54	396	1.00	396	450	
2	WBR	82	1.00	82	396	1.00	396	478	
2	WBT w/U	54	1.00	54	509	1.00	509	563	

Remarks:
* Critical Volume.

PM TOTAL 1432
v/c = 0.90 LOS D

Turning Movement Summary and Level of Service

Count Date: 2025
Condition: Alt 4
Design Year:
Computed by: EWM Date: 11/16/02

Location: MD 140 & Leidy Rd / Old Balto. Rd
Checked by: TAR Date: 11/21/02

URS

AM PEAK HOUR:

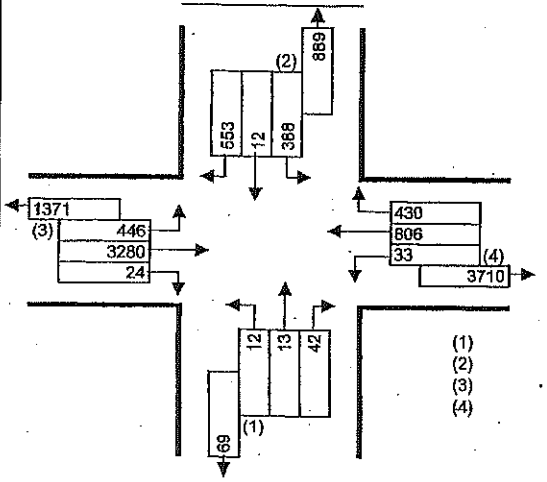

Split Phase Signal Operation

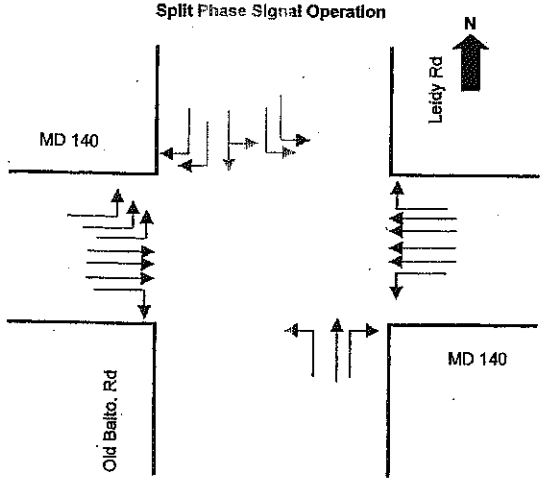

PM PEAK HOUR:

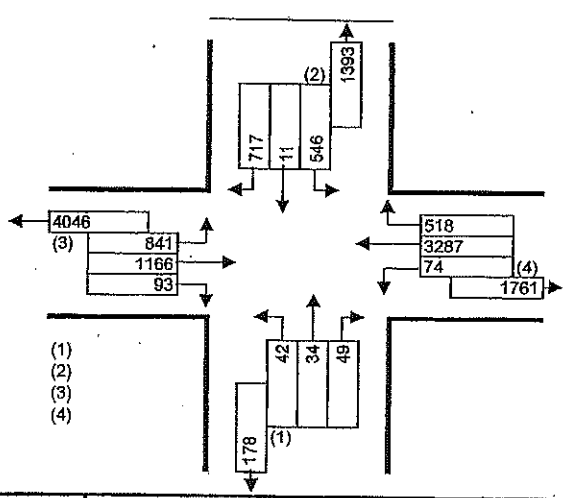

Phasing (Φ)			
1	2	3	4
5	6	7	8

Intersection Control Type:
Signal X Stop ____ Ways ____

No. of Lanes		Lane Use Factor
1	=	1.00
2	=	0.55
3	=	0.40
4	=	0.30
Dble. Left	=	0.60
Trpl. Left	=	0.50

Level of Service		Critical Lane Vol. Total
A	≤	1000
B	≤	1150
C	≤	1300
D	≤	1450
E	≤	1600
F	>	1600

Opposing Volume (vph)		PCE
≤	199	1.1
≤	599	2.0
≤	799	3.0
≤	999	4.0
>	1000	5.0

Φ	Movement	Volume (1)	Lane Use Factor (2)	Lane Volume (1)*(2)=(3)	Opposing Lefts (4)	Lefts Lane Use Factor (5)	Left Volume (4)*(5)=(6)	Critical Lane Volume (3)+(6)	*
	NBT	13	1.00	13	0	1.00	0	13	*
	SBTL	400	0.50	200	0	1.00	0	200	*
	EBT	3280	0.40	1312	33	1.00	33	1345	*
	WBT	806	0.30	242	446	0.50	223	465	
				0			0	0	

Remarks:
* Critical Volume.

AM TOTAL 1558
v/c = 0.97 LOS E

Φ	Movement	Volume (1)	Lane Use Factor (2)	Lane Volume (1)*(2)=(3)	Opposing Lefts (4)	Lefts Lane Use Factor (5)	Left Volume (4)*(5)=(6)	Critical Lane Volume (3)+(6)	*
	NBL	42	1.00	42	0	1.00	0	42	*
	SBTL	557	0.50	279	0	1.00	0	279	*
	EBT	1166	0.40	466	74	1.00	74	540	
	WBT	3287	0.30	986	841	0.50	421	1407	*
				0			0	0	

Remarks:
* Critical Volume.

PM TOTAL 1727
v/c = 1.08 LOS F

Traffic Data
&
Critical Lane Analysis

Alternate 6 – 2025 Half Bridge

Turning Movement Summary and Level of Service

Count Date: 2025 | Condition: TSM | Design Year: | Computed by: RLT Date: 1/11/2007 | Location: MD 140 @ Sullivan | Checked by: TAR Date: 1/11/2007

URS

AM PEAK HOUR:

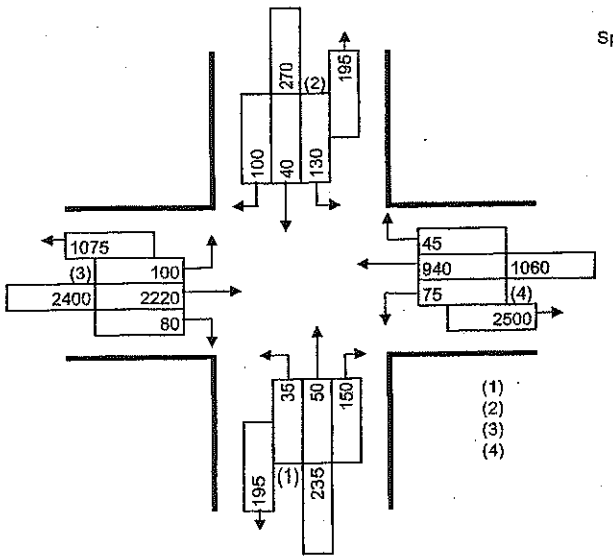

Split-phased

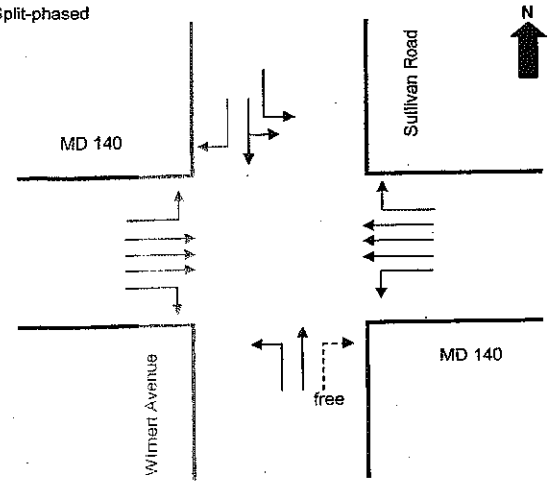

PM PEAK HOUR:

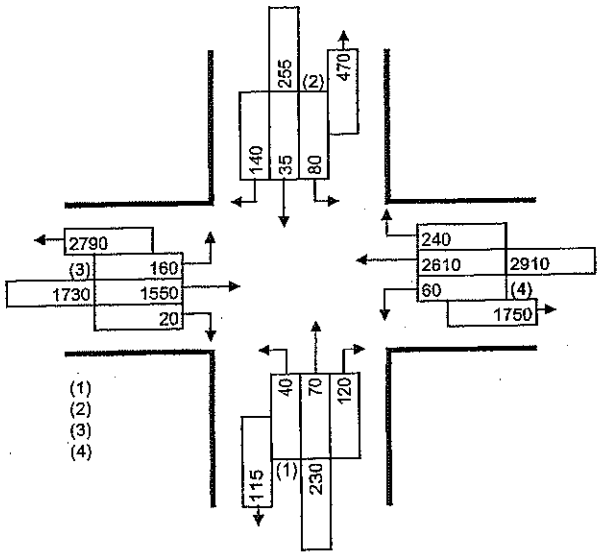

Phasing (Φ)			
1	2	3	4
5	6	7	8

Intersection Control Type:
Signal X Stop ____ Ways ____

No. of Lanes		Lane Use Factor
1	=	1.00
2	=	0.55
3	=	0.40
4	=	0.30
Dble. Left	=	0.60
Trpl. Left	=	0.45

Level of Service		Critical Lane Vol. Total
A	≤	1000
B	≤	1150
C	≤	1300
D	≤	1450
E	≤	1600
F	>	1600

Opposing Volume (vph)		PCE
≤	199	1.1
≤	599	2.0
≤	799	3.0
≤	999	4.0
>	1000	5.0

Φ	Movement	Volume (1)	Lane Use Factor (2)	Lane Volume (1)*(2)=(3)	Opposing Lefts (4)	Lefts Lane Use Factor (5)	Left Volume (4)*(5)=(6)	Critical Lane Volume (3)+(6)	*
	NBT	50	1.00	50	0	1.00	0	50	*
	SBTL	170	0.60	102	0	1.00	0	102	*
	EBT	2220	0.40	888	75	1.00	75	963	*
	WBT	940	0.40	376	100	1.00	100	476	

Remarks:

* Critical Volume.

AM TOTAL 1115

v/c = 0.70 LOS B

Φ	Movement	Volume (1)	Lane Use Factor (2)	Lane Volume (1)*(2)=(3)	Opposing Lefts (4)	Lefts Lane Use Factor (5)	Left Volume (4)*(5)=(6)	Critical Lane Volume (3)+(6)	*
	NBT	70	1.00	70	0	1.00	0	70	*
	SBTL	115	0.60	69	0	1.00	0	69	*
	EBT	1550	0.40	620	60	1.00	60	680	
	WBT	2610	0.40	1044	160	1.00	160	1204	*

Remarks:

* Critical Volume.

PM TOTAL 1343

v/c = 0.84 LOS D

Turning Movement Summary and Level of Service

Count Date: 2025 | Location: MD 140 & Englar Rd
Condition: ALT 6 - half bridges
Design Year: Combination Malcolm/Center
Computed by: EWM Date: 11/17/02 | Checked by: Date:

URS

AM PEAK HOUR:

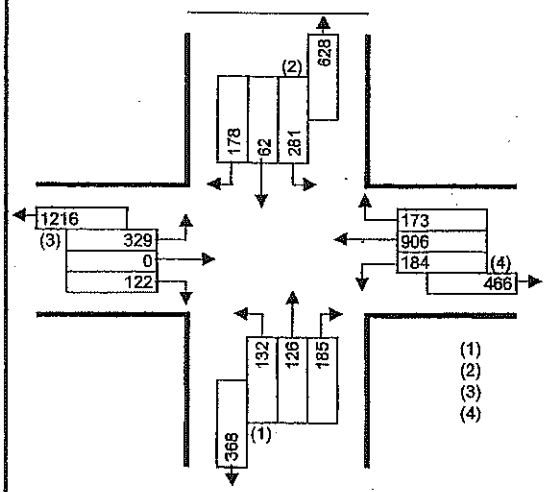

Half-bridge bypass for EB thru traffic.

SPLIT PHASE SIGNAL

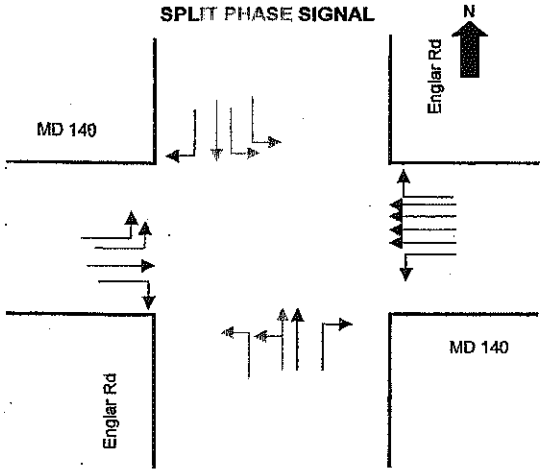

PM PEAK HOUR:

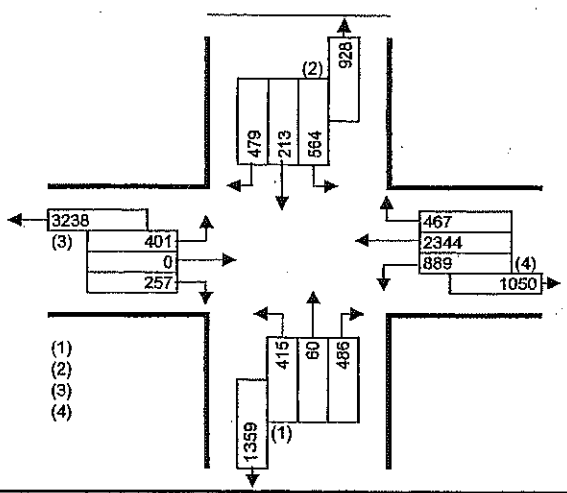

No. of Lanes		Lane Use Factor
1	=	1.00
2	=	0.55
3	=	0.40
4	=	0.30
Dble. Left	=	0.60
Trpl. Left	=	0.50

Level of Service		Critical Lane Vol. Total
A	≤	1000
B	≤	1150
C	≤	1300
D	≤	1450
E	≤	1600
F	>	1600

Opposing Volume (vph)		PCE
≤	199	1.1
≤	599	2.0
≤	799	3.0
≤	999	4.0
>	1000	5.0

Phasing (Φ)

1	2	3	4
5	6	7	8

Intersection Control Type:
Signal X Stop ____ Ways ____

Φ	Movement	Volume (1)	Lane Use Factor (2)	Lane Volume (1)*(2)=(3)	Opposing Lefts (4)	Lefts Lane Use Factor (5)	Left Volume (4)*(5)=(6)	Critical Lane Volume (3)+(6)	*
1	NBLT	258	0.50	129	0	1.00	0	129	*
2	SBL	281	0.60	169	0	1.00	0	169	*
3	EBR	0	1.00	0	184	1.00	184	184	
3	WBT	906	0.30	272	329	0.60	197	469	*
				0			0	0	

Remarks: NBR - not critical
NBL will not use shared lane

* Critical Volume.

AM TOTAL 767
v/c = 0.48 LOS A

Φ	Movement	Volume (1)	Lane Use Factor (2)	Lane Volume (1)*(2)=(3)	Opposing Lefts (4)	Lefts Lane Use Factor (5)	Left Volume (4)*(5)=(6)	Critical Lane Volume (3)+(6)	*
1	NBL	415	0.60	249	0	1.00	0	249	*
2	SBL	564	0.60	338	0	1.00	0	338	*
3	EBR	8	1.00	8	889	1.00	889	897	
3	WBT	2344	0.30	703	401	0.60	241	944	*
				0			0	0	

Remarks: NBR - not critical

* Critical Volume.

PM TOTAL 1531
v/c = 0.96 LOS E

Turning Movement Summary and Level of Service

Count Date: 2025 | Location: MD 140 & Center St
Condition: ALT 6 - half bridges
Design Year: Combination Malcolm/Center
Computed by: EWM Date: 11/17/02 | Checked by: Date:

URS

Half-bridge bypass for WB thru-traffic.

SPLIT PHASE SIGNAL

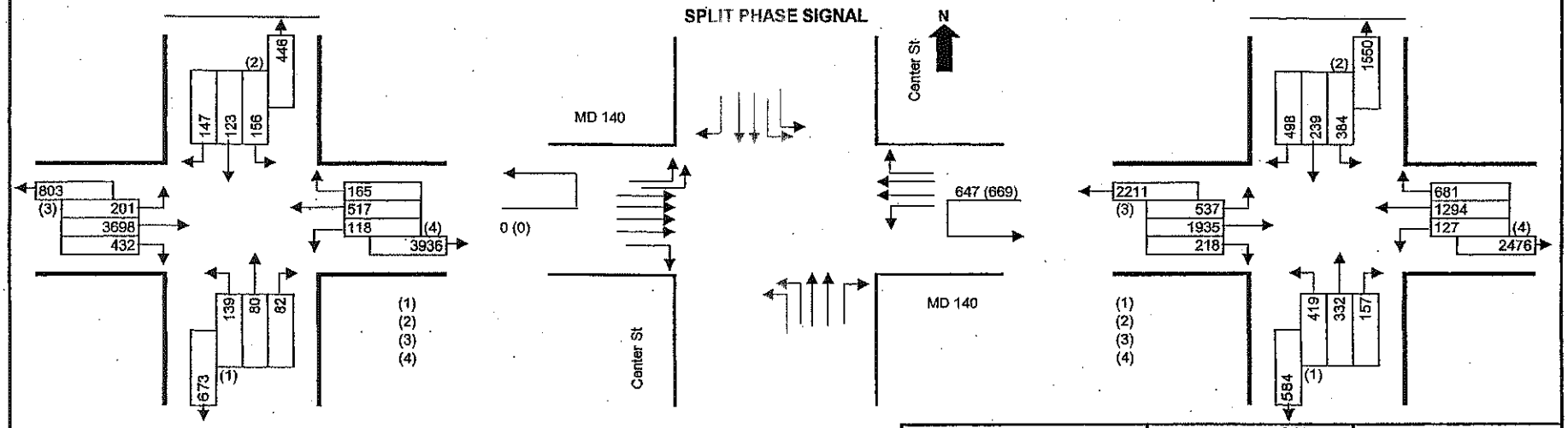

Phasing (Φ)			
1	2	3	4
5	6	7	8

Intersection Control Type:
Signal X Stop ____ Ways ____

No. of Lanes		Lane Use Factor
1	=	1.00
2	=	0.55
3	=	0.40
4	=	0.30
Dble. Left	=	0.60
Trpl. Left	=	0.50

Level of Service	Critical Lane Vol. Total
A	1000
B	1150
C	1300
D	1450
E	1600
F	1600

Opposing Volume (vph)	PCE
≤ 199	1.1
≤ 599	2.0
≤ 799	3.0
≤ 999	4.0
≥ 1000	5.0

Φ	Movement	Volume (1)	Lane Use Factor (2)	Lane Volume (1)*(2)=(3)	Opposing Lefts (4)	Lefts Lane Use Factor (5)	Left Volume (4)*(5)=(6)	Critical Lane Volume (3)+(6)	*
1	NBL	139	0.60	83	0	1.00	0	83	*
2	SBL	156	0.60	94	0	1.00	0	94	*
3	EBT	3698	0.30	1109	118	1.00	118	1227	*
3	WBT	517	0.55	284	201	0.60	121	405	
3	EBT w/U	3698	0.30	1109	647	1.00	647	1756	
1	NBT	80	1.00	80	0	1.00	0	80	

Remarks: U-turn as critical = CLV of 1933

AM TOTAL 1404
v/c = 0.88 LOS D

* Critical Volume.

Φ	Movement	Volume (1)	Lane Use Factor (2)	Lane Volume (1)*(2)=(3)	Opposing Lefts (4)	Lefts Lane Use Factor (5)	Left Volume (4)*(5)=(6)	Critical Lane Volume (3)+(6)	*
1	NBL	419	0.60	251	0	1.00	0	251	*
2	SBL	384	0.60	230	0	1.00	0	230	*
3	EBT	1935	0.30	581	127	1.00	127	708	
3	WBT	1294	0.55	712	537	0.60	322	1034	*
3	EBT w/U	1935	0.30	581	669	1.00	669	1250	
				0	0	1.00	0	0	
				0	0	1	0	0	*

Remarks: U-turn as critical = CLV of 1731

PM TOTAL 1516
v/c = 0.95 LOS E

* Critical Volume.

Turning Movement Summary and Level of Service

Count Date: 2025
Condition: Alt 4
Design Year:
Computed by: EWM Date: 11/16/02

Location: MD 140 & Cranberry Rd / Ralph St (N)
Checked by: TAR Date: 11/21/02

URS

AM PEAK HOUR:

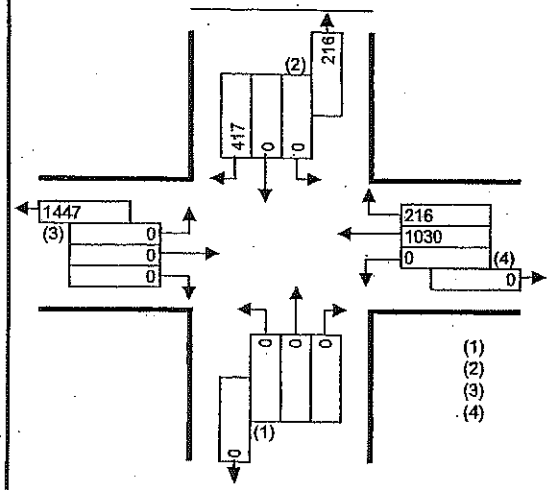

SBR has its own receiving lane heading west

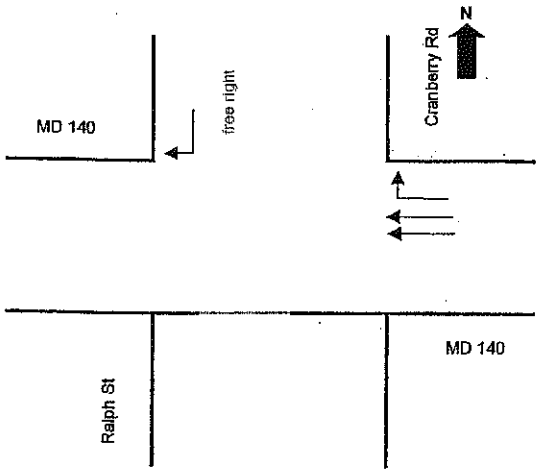

PM PEAK HOUR:

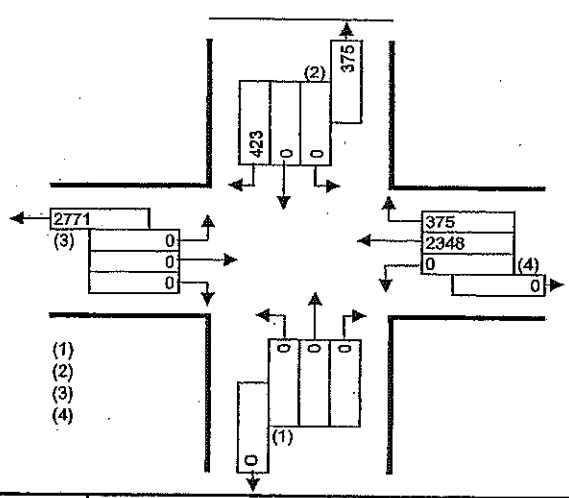

Phasing (Φ)

1	2	3	4
5	6	7	8

Intersection Control Type:
Signal X Stop ____ Ways ____

No. of Lanes		Lane Use Factor
1	=	1.00
2	=	0.55
3	=	0.40
4	=	0.30
Dble. Left	=	0.60
Trpl. Left	=	0.50

Level of Service		Critical Lane Vol. Total
A	≤	1000
B	≤	1150
C	≤	1300
D	≤	1450
E	≤	1600
F	>	1600

Opposing Volume (vph)		PCE
≤	199	1.1
≤	599	2.0
≤	799	3.0
≤	999	4.0
>	1000	5.0

Φ	Movement	Volume (1)	Lane Use Factor (2)	Lane Volume (1)*(2)=(3)	Opposing Lefts (4)	Lefts Lane Use Factor (5)	Left Volume (4)*(5)=(6)	Critical Lane Volume (3)+(6)	*
	SBR	417	1.00	417	0	1.00	0	417	
	WBT	1030	0.55	567	0	1.00	0	567	*
				0			0	0	
				0			0	0	

Remarks:
* Critical Volume.

AM TOTAL 567
v/c = 0.35 LOS A

Φ	Movement	Volume (1)	Lane Use Factor (2)	Lane Volume (1)*(2)=(3)	Opposing Lefts (4)	Lefts Lane Use Factor (5)	Left Volume (4)*(5)=(6)	Critical Lane Volume (3)+(6)	*
	SBR	423	1.00	423	0	1.00	0	423	
	WBT	2348	0.55	1291	0	1.00	0	1291	*
				0			0	0	
				0			0	0	

Remarks:
* Critical Volume.

PM TOTAL 1291
v/c = 0.81 LOS C

Turning Movement Summary and Level of Service

Count Date: 2025 | Location: MD 140 & Cranberry Rd / Ralph St (S)
Condition: ALT 6 - half bridges
Design Year: Combination Malcolm/Center
Computed by: EWM Date: 11/17/02 | Checked by: Date:

URS

AM PEAK HOUR:

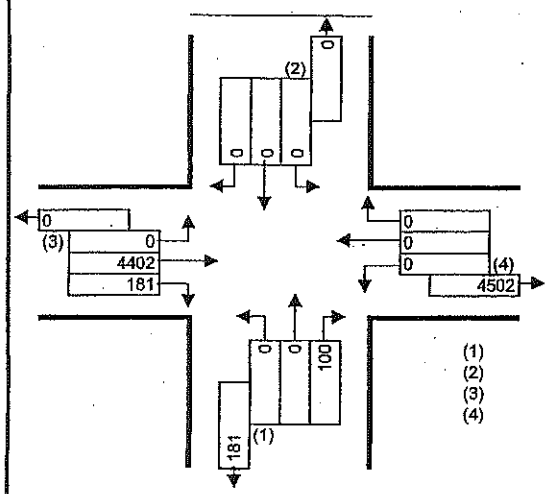

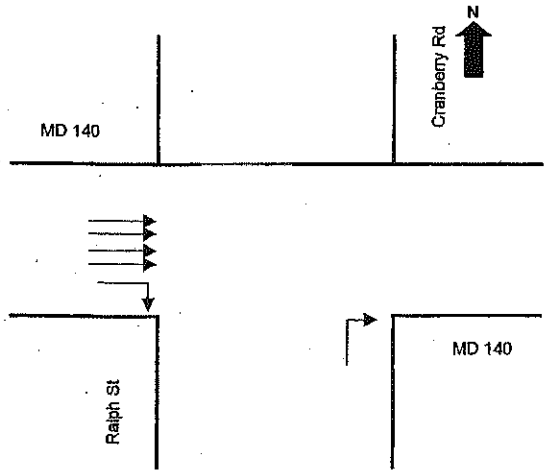

PM PEAK HOUR:

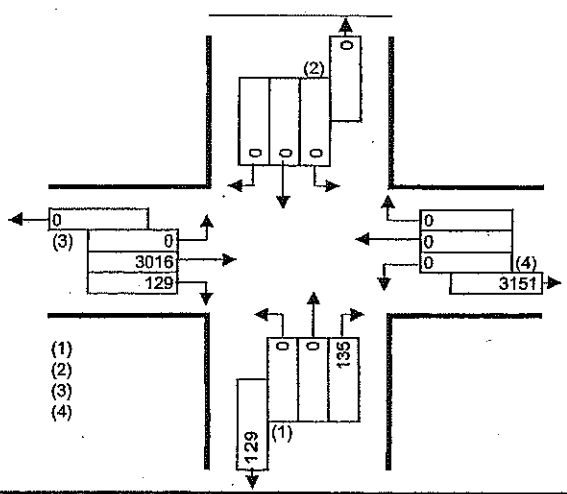

Phasing (Φ)			
1	2	3	4
5	6	7	8

Intersection Control Type:
Signal X Stop ____ Ways ____

No. of Lanes		Lane Use Factor
1	=	1.00
2	=	0.55
3	=	0.40
4	=	0.30
Dble. Left	=	0.60
Trpl. Left	=	0.50

Level of Service		Critical Lane Vol. Total
A	≤	1000
B	≤	1150
C	≤	1300
D	≤	1450
E	≤	1600
F	>	1600

Opposing Volume (vph)		PCE
≤	199	1.1
≤	599	2.0
≤	799	3.0
≤	999	4.0
>	1000	5.0

Φ	Movement	Volume (1)	Lane Use Factor (2)	Lane Volume (1)*(2)=(3)	Opposing Lefts (4)	Lefts Lane Use Factor (5)	Left Volume (4)*(5)=(6)	Critical Lane Volume (3)+(6)	*
	NBR	100	1.00	100	0	1.00	0	100	*
	EBT	4402	0.30	1321	0	1.00	0	1321	*
				0			0	0	
				0			0	0	

Remarks:
* Critical Volume.

AM TOTAL 1421
v/c = 0.89 LOS D

Φ	Movement	Volume (1)	Lane Use Factor (2)	Lane Volume (1)*(2)=(3)	Opposing Lefts (4)	Lefts Lane Use Factor (5)	Left Volume (4)*(5)=(6)	Critical Lane Volume (3)+(6)	*
	NBR	135	1.00	135	0	1.00	0	135	*
	EBT	3016	0.30	905	0	1.00	0	905	*
				0			0	0	
				0			0	0	

Remarks:
* Critical Volume.

PM TOTAL 1040
v/c = 0.65 LOS B

Turning Movement Summary and Level of Service

Count Date: 2025 | Condition: Alt 4 | Design Year: | Computed by: EWM Date: 11/16/02

Location: MD 140 & Gorsuch Rd (N) | Checked by: TAR Date: 11/21/02

URS

AM PEAK HOUR:

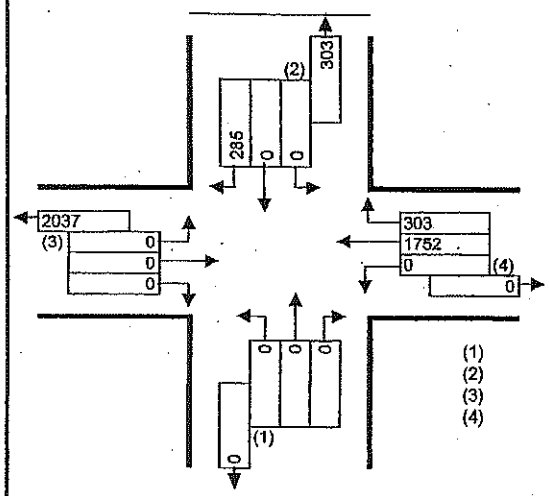

SBR has its own receiving lane

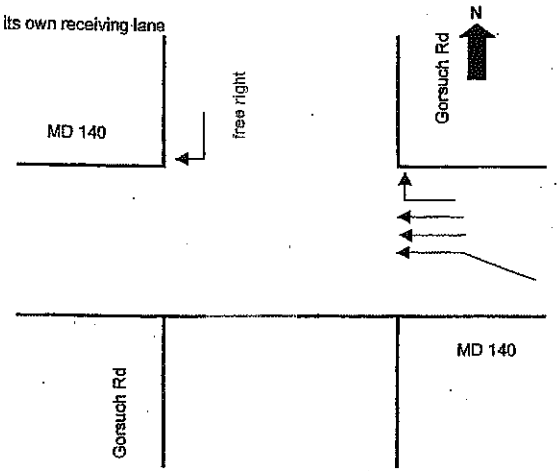

PM PEAK HOUR:

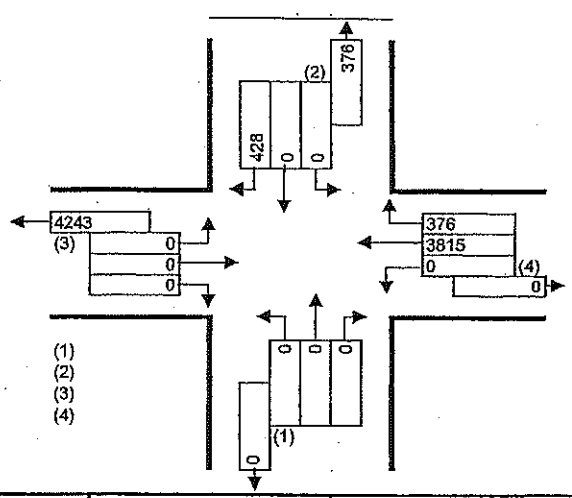

Lane balance issues westbound **from slip ramp.**

Intersection Control Type:
Signal X Stop _____ Ways _____

Phasing (Φ)

1	2	3	4
5	6	7	8

No. of Lanes		Lane Use Factor
1	=	1.00
2	=	0.55
3	=	0.40
4	=	0.30
Dble. Left	=	0.60
Trpl. Left	=	0.50

Level of Service		Critical Lane Vol. Total
A	≤	1000
B	≤	1150
C	≤	1300
D	≤	1450
E	≤	1600
F	>	1600

Opposing Volume (vph)		PCE
≤	199	1.1
≤	599	2.0
≤	799	3.0
≤	999	4.0
>	1000	5.0

Φ	Movement	Volume (1)	Lane Use Factor (2)	Lane Volume (1)*(2)=(3)	Opposing Lefts (4)	Lefts Lane Use Factor (5)	Left Volume (4)*(5)=(6)	Critical Lane Volume (3)+(6)	*
	SBR	285	1.00	285	0	1.00	0	285	
	WBT	1752	0.40	701	0	1.00	0	701	*
				0			0	0	
				0			0	0	

Remarks: WBR - is exclusive

* Critical Volume.

AM TOTAL 701

v/c = 0.44 LOS A

Φ	Movement	Volume (1)	Lane Use Factor (2)	Lane Volume (1)*(2)=(3)	Opposing Lefts (4)	Lefts Lane Use Factor (5)	Left Volume (4)*(5)=(6)	Critical Lane Volume (3)+(6)	*
	SBR	428	1.00	428	0	1.00	0	428	
	WBT	3815	0.40	1526	0	1.00	0	1526	*
				0			0	0	
				0			0	0	

Remarks:

* Critical Volume.

PM TOTAL 1526

v/c = 0.95 LOS E

Turning Movement Summary and Level of Service

Count Date: 2025 | Location: MD 140 & Gorsuch Rd (S)
Condition: ALT 6 - half bridges
Design Year: Combination Malcolm/Center
Computed by: EWM Date: 11/17/02 | Checked by: ____ Date: ____

URS

AM PEAK HOUR:

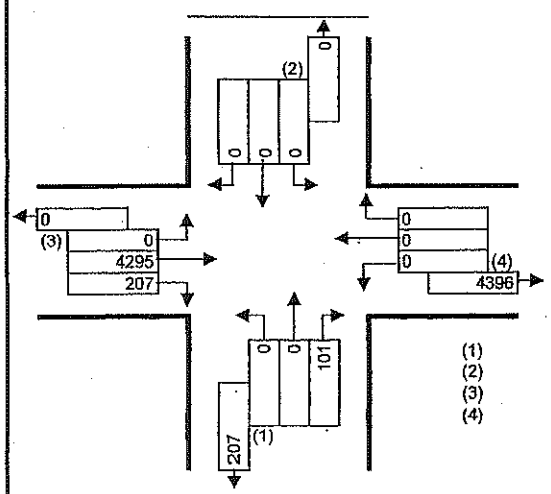

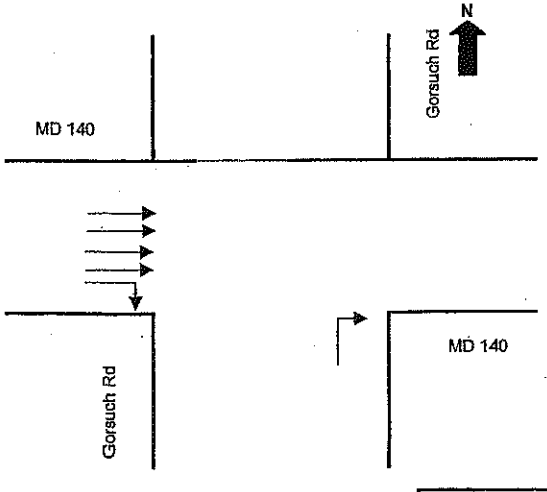

PM PEAK HOUR:

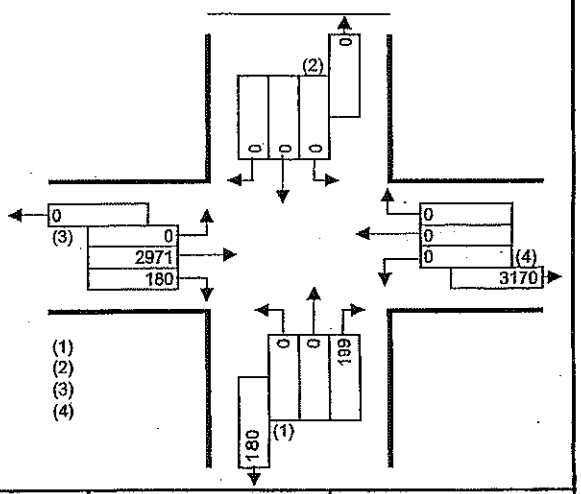

Phasing (Φ)			
1	2	3	4
5	6	7	8

Intersection Control Type:
Signal ___X___ Stop _____ Ways _____

No. of Lanes		Lane Use Factor
1	=	1.00
2	=	0.55
3	=	0.40
4	=	0.30
Dble. Left	=	0.60
Trpl. Left	=	0.50

Level of Service	Critical Lane Vol. Total
A	1000
B	1150
C	1300
D	1450
E	1600
F	1600

Opposing Volume (vph)	PCE
199	1.1
599	2.0
799	3.0
999	4.0
1000	5.0

Φ	Movement	Volume (1)	Lane Use Factor (2)	Lane Volume (1)*(2)=(3)	Opposing Lefts (4)	Lefts Lane Use Factor (5)	Left Volume (4)*(5)=(6)	Critical Lane Volume (3)+(6)	*
	NBR	101	1.00	101	0	1.00	0	101	*
	EBT	4295	0.30	1289	0	1.00	0	1289	*
				0			0	0	
				0			0	0	

Remarks:
* Critical Volume.

AM TOTAL 1390
v/c = 0.87 LOS D

Φ	Movement	Volume (1)	Lane Use Factor (2)	Lane Volume (1)*(2)=(3)	Opposing Lefts (4)	Lefts Lane Use Factor (5)	Left Volume (4)*(5)=(6)	Critical Lane Volume (3)+(6)	*
	NBR	199	1.00	199	0	1.00	0	199	*
	EBT	1350	0.30	405	0	1.00	0	405	*
				0			0	0	
				0			0	0	

Remarks:
* Critical Volume.

PM TOTAL 604
v/c = 0.38 LOS A

Turning Movement Summary and Level of Service

Count Date: 2025 | Location: MD 140 & Malcolm Dr / MD 97
Condition: ALT 6 - half bridges
Design Year: Combination Malcolm/Center
Computed by: EWM Date: 11/17/02 | Checked by: Date:

URS

AM PEAK HOUR:

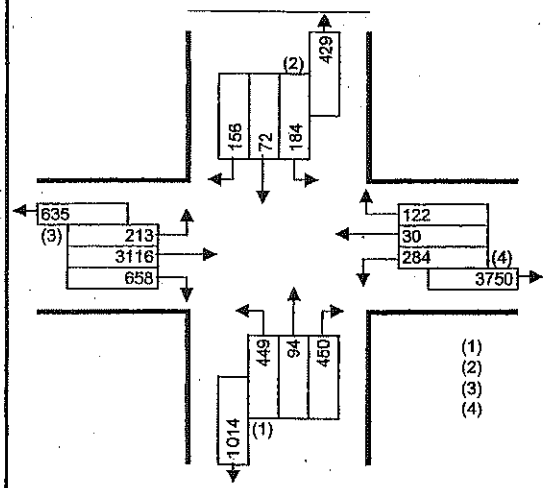

Half-bridge bypass for WB thru traffic.

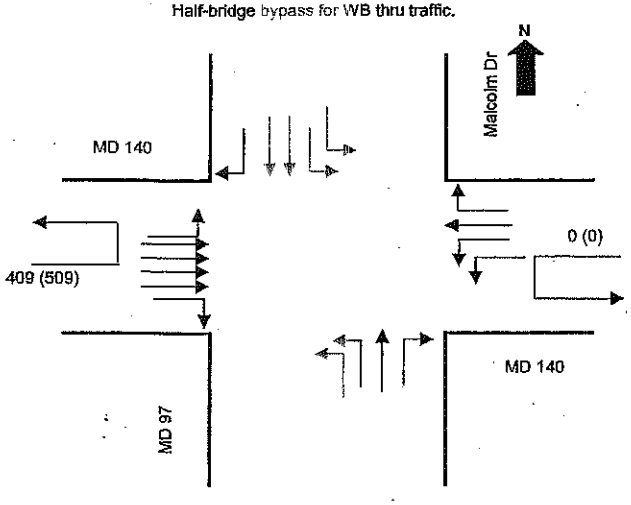

PM PEAK HOUR:

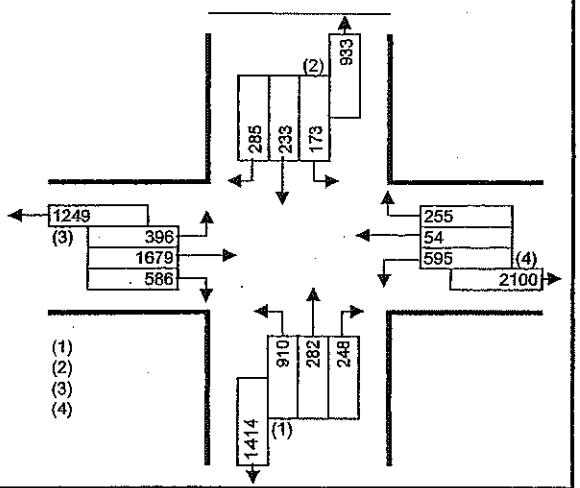

Phasing (Φ)

1	2	3	4
5	6	7	8

Intersection Control Type:
Signal X Stop _____ Ways _____

No. of Lanes		Lane Use Factor
1	=	1.00
2	=	0.55
3	=	0.40
4	=	0.30
Dble. Left	=	0.60
Trpl. Left	=	0.50

Level of Service		Critical Lane Vol. Total
A	≤	1000
B	≤	1150
C	≤	1300
D	≤	1450
E	≤	1600
F	>	1600

Opposing Volume (vph)		PCE
≤	199	1.1
≤	599	2.0
≤	799	3.0
≤	999	4.0
>	1000	5.0

Φ	Movement	Volume (1)	Lane Use Factor (2)	Lane Volume (1)*(2)=(3)	Opposing Lefts (4)	Lefts Lane Use Factor (5)	Left Volume (4)*(5)=(6)	Critical Lane Volume (3)+(6)	*
1	NBL	449	0.60	269	0	1.00	0	269	*
2	SBL	184	0.60	110	0	1.00	0	110	*
3	EBT	3116	0.30	935	284	0.60	170	1105	*
3	WBT	30	1.00	30	213	1.00	213	243	
1	NBR	280	1.00	280	0	1.00	0	280	*
	EBT		1.00	0	0	1.00	0	0	

Remarks: NBR = 450 - 170 = 280
EBR = 658 - 269 = 389

* Critical Volume.

AM TOTAL 1496
v/c = 0.93 LOS E

Φ	Movement	Volume (1)	Lane Use Factor (2)	Lane Volume (1)*(2)=(3)	Opposing Lefts (4)	Lefts Lane Use Factor (5)	Left Volume (4)*(5)=(6)	Critical Lane Volume (3)+(6)	*
1	NBL	910	0.60	546	0	1.00	0	546	*
2	SBT	233	0.55	128	0	1.00	0	128	*
3	EBT	1679	0.30	504	595	0.60	357	861	*
3	WBT	54	1.00	54	396	1.00	396	450	
3			1.00	0	0	1.00	0	0	

Remarks:

* Critical Volume.

PM TOTAL 1535
v/c = 0.96 LOS E

File: MD140 2025 - ALT6 - half bridges-combo, Tab: MD97

Printed: 11/26/02, 9:20 AM

6.A

Turning Movement Summary and Level of Service

Count Date: 2025 | Condition: Alt 4 | Design Year: | Computed by: EWM Date: 11/16/02

Location: MD 140 & Leidy Rd / Old Balto. Rd | Checked by: TAR Date: 11/21/02

URS

AM PEAK HOUR:

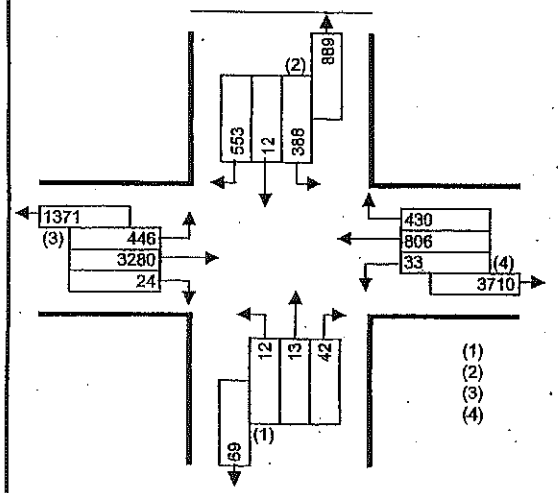

Split Phase Signal Operation

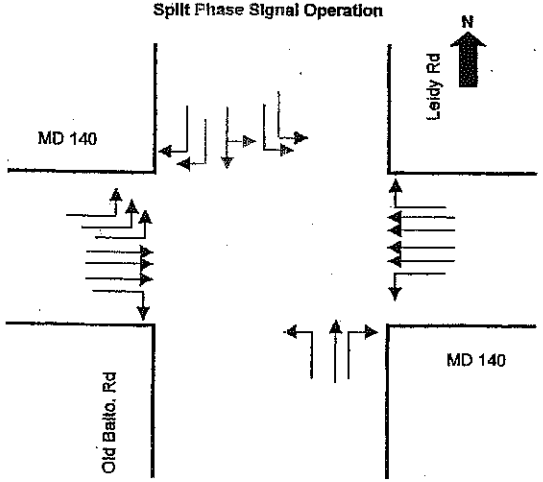

PM PEAK HOUR:

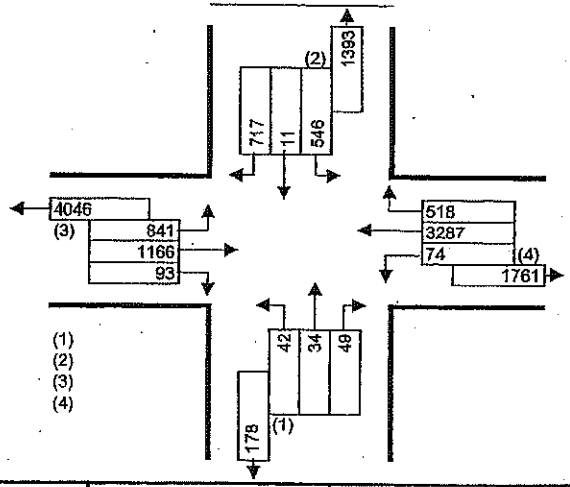

Phasing (Φ)

1	2	3	4
5	6	7	8

Intersection Control Type: Signal X Stop _____ Ways _____

No. of Lanes		Lane Use Factor
1	=	1.00
2	=	0.55
3	=	0.40
4	=	0.30
Dble. Left	=	0.60
Trpl. Left	=	0.50

Level of Service		Critical Lane Vol. Total
A	≤	1000
B	≤	1150
C	≤	1300
D	≤	1450
E	≤	1600
F	>	1600

Opposing Volume (vph)		PCE
≤	199	1.1
≤	599	2.0
≤	799	3.0
≤	999	4.0
>	1000	5.0

Φ	Movement	Volume (1)	Lane Use Factor (2)	Lane Volume (1)*(2)=(3)	Opposing Lefts (4)	Lefts Lane Use Factor (5)	Left Volume (4)*(5)=(6)	Critical Lane Volume (3)+(6)	*
	NBT	13	1.00	13	0	1.00	0	13	*
	SBTL	400	0.50	200	0	1.00	0	200	*
	EBT	3280	0.40	1312	33	1.00	33	1345	*
	WBT	806	0.30	242	446	0.50	223	465	
				0			0	0	

Remarks:

* Critical Volume.

AM TOTAL 1558

v/c = 0.97 LOS E

Φ	Movement	Volume (1)	Lane Use Factor (2)	Lane Volume (1)*(2)=(3)	Opposing Lefts (4)	Lefts Lane Use Factor (5)	Left Volume (4)*(5)=(6)	Critical Lane Volume (3)+(6)	*
	NBL	42	1.00	42	0	1.00	0	42	*
	SBTL	557	0.50	279	0	1.00	0	279	*
	EBT	1166	0.40	466	74	1.00	74	540	
	WBT	3287	0.30	986	841	0.50	421	1407	*
				0			0	0	

Remarks:

* Critical Volume.

PM TOTAL 1727

v/c = 1.08 LOS F

Traffic Data
&
Critical Lane Analysis/
Time Saving Analysis

Alternate 7 – 2025 CFI

Intersection Level-of-Service (LOS) and Average Delay (Avg. Delay)								
Forecast Year = 2025		Sullivan Road	Englar Road	Center Street	Cranberry Rd/ Ralph Street	Gorsuch Road	Malcolm Drive	Market Street
Alternate 1 (No-Build)	**LOS[1]** AM (PM)	F (F)	F (F)	F (F)	F (F)	F (F)	F (F)	F (F)
	Avg. Delay[2] (seconds)	65.1	103.2	111.1	30.2	114.5	151.4	128.9
Alternate 2 (TSM)	**LOS[1]** AM (PM)	B (D)	F (F)	F (F)	D (E)	D (F)	E (F)	E (F)
	Avg. Delay[2] (seconds)	27.7	62.1	28.3	12.5	18.5	61.7	61.7
Alternate 5 (SPUI)	**LOS[1]** AM (PM)	B (D)	A (E)	B (D)	N/A*	N/A*	A (D)	E (F)
	Avg. Delay[2] (seconds)	44.9	33.2	30.2			53.0	75.8
Alternate 6 (Half Bridge)	**LOS[1]** AM (PM)	B (D)	A (E)	D (E)	N/A*	N/A*	E (E)	E (F)
	Avg. Delay[2] (seconds)	44.9	37.2	37.5			36.3	83.4
Alternate 7 (CFI)	**LOS[1]** AM (PM)	B (D)	E (E)	F (F)	D (E)	D (F)	E (F)	E (F)
	Avg. Delay[2] (seconds)	32.2	25.0	23.8	11.1	20.4	22.6	20.4

[1]Based on critical lane analysis. Each intersection is analyzed independently.
[2]Based on VSSIM analyses for PM peak hour. All intersections for a given alternate are analyzed as part of a single system.
*N/A - Not Applicable: Right-in/right-out access only under Alternates 5 and 6.

URS Corporation

Maryland SHA Queuing Analysis

Computed By: RLT
Checked By:

Date: 4/14/2004
Date:

Location: MD 140 - CFIs

Scenario	Year	Peak Hour	Level of Service	Number of Phases per Cycle	Cycle Length (sec)	Volume	Lane Use Factor	Critical Lane Volume	Ave. Veh. per Cycle per Lane	Max. Veh. per Cycle per Lane	Max. Queue Length per Cycle per Lane (ft)
MD 140 @ Center Street											
EBL	2025	AM	F	4	165	201	0.60	121	5.5	7.7	193
	2025	PM	F	4	165	537	0.60	322	14.8	20.7	517
WBL	2025	AM	F	4	165	118	0.60	71	3.2	4.5	114
	2025	PM	F	4	165	127	0.60	76	3.5	4.9	122
MD 140 @ Malcom Drive											
EBL	2025	AM	E	4	150	213	0.60	128	5.3	7.5	186
	2025	PM	F	4	165	396	0.60	238	10.9	15.2	381
WBL	2025	AM	E	4	150	284	0.60	170	7.1	9.9	249
	2025	PM	F	4	165	595	0.60	357	16.4	22.9	573
MD 140 @ Englar Road											
EBL	2025	AM	E	4	150	329	0.60	197	8.2	11.5	288
	2025	PM	E	4	150	401	0.60	241	10.0	14.0	351
WBL	2025	AM	E	4	150	184	0.60	110	4.6	6.4	161
	2025	PM	E	4	150	889	0.60	533	22.2	31.1	778
MD 140 @ Market Street											
EBL	2025	AM	E	5	150	446	0.60	268	11.2	15.6	390
	2025	PM	F	5	165	841	0.60	505	23.1	32.4	809
WBL	2025	AM	E	5	150	33	1.00	33	1.4	1.9	48
	2025	PM	F	5	165	74	1.00	74	3.4	4.7	119

Turning Movement Summary and Level of Service

Count Date: 2025 | Condition: TSM | Design Year: | Computed by: RLT Date: 1/11/2007 | Location: MD 140 @ Sullivan | Checked by: TAR Date: 1/11/2007

URS

AM PEAK HOUR:

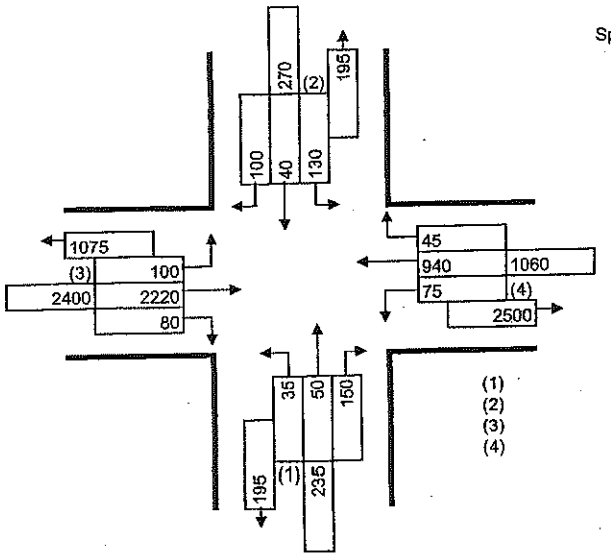

Split-phased

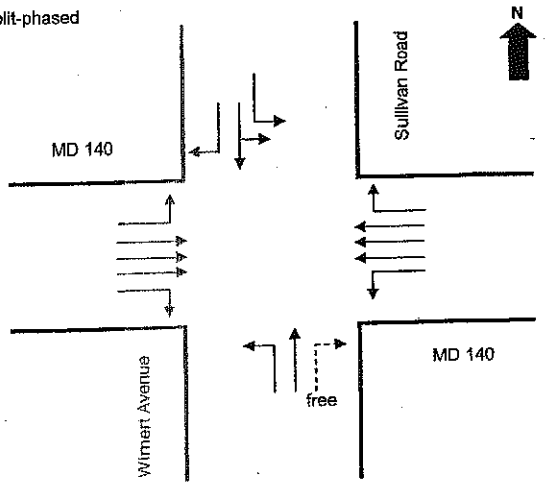

PM PEAK HOUR:

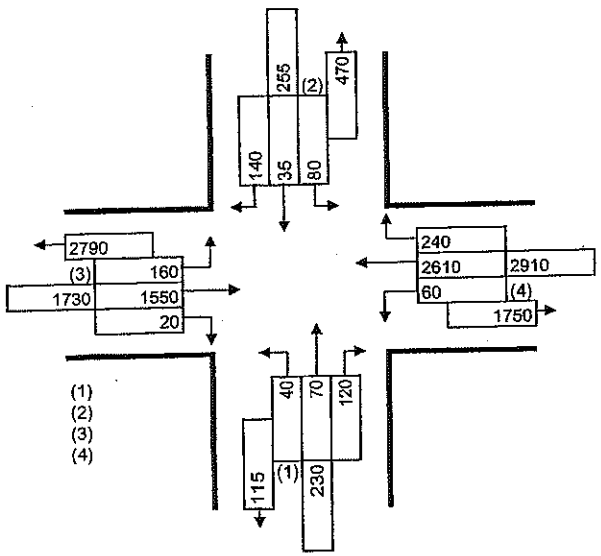

Phasing (Φ)

1	2	3	4
5	6	7	8

Intersection Control Type: Signal X Stop _____ Ways _____

No. of Lanes		Lane Use Factor
1	=	1.00
2	=	0.55
3	=	0.40
4	=	0.30
Dble. Left	=	0.60
Trpl. Left	=	0.45

Level of Service		Critical Lane Vol. Total
A	≤	1000
B	≤	1150
C	≤	1300
D	≤	1450
E	≤	1600
F	>	1600

Opposing Volume (vph)		PCE
≤	199	1.1
≤	599	2.0
≤	799	3.0
≤	999	4.0
>	1000	5.0

Φ	Movement	Volume (1)	Lane Use Factor (2)	Lane Volume (1)*(2)=(3)	Opposing Lefts (4)	Lefts Lane Use Factor (5)	Left Volume (4)*(5)=(6)	Critical Lane Volume (3)+(6)	*
	NBT	50	1.00	50	0	1.00	0	50	*
	SBTL	170	0.60	102	0	1.00	0	102	*
	EBT	2220	0.40	888	75	1.00	75	963	*
	WBT	940	0.40	376	100	1.00	100	476	

Remarks:

* Critical Volume.

AM TOTAL 1115

v/c = 0.70 LOS B

Φ	Movement	Volume (1)	Lane Use Factor (2)	Lane Volume (1)*(2)=(3)	Opposing Lefts (4)	Lefts Lane Use Factor (5)	Left Volume (4)*(5)=(6)	Critical Lane Volume (3)+(6)	*
	NBT	70	1.00	70	0	1.00	0	70	*
	SBTL	115	0.60	69	0	1.00	0	69	*
	EBT	1550	0.40	620	60	1.00	60	680	*
	WBT	2610	0.40	1044	160	1.00	160	1204	*

Remarks:

* Critical Volume.

PM TOTAL 1343

v/c = 0.84 LOS D

Printed: 9/10/2007, 3:55 PM

File: CLA - Sullivan, Tab: Sullivan - 2006

Turning Movement Summary and Level of Service

Count Date: 2025 | Location: MD 140 & Cranberry Rd / Ralph St
Condition: TSM - As Shown on the Alt 2 Map
Design Year:
Computed by: RLT Date: 4/26/2004 | Checked by: TAR Date: 5/6/2004

URS

AM PEAK HOUR:

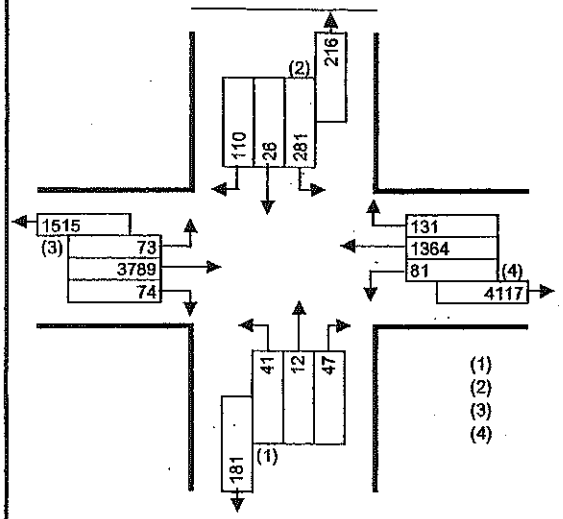

Split Phase Signal Operation

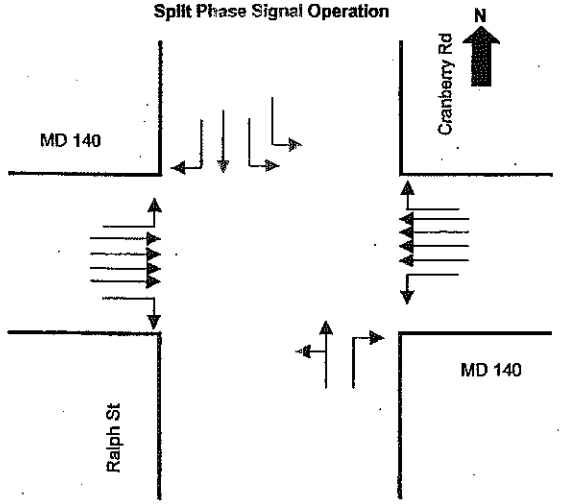

PM PEAK HOUR:

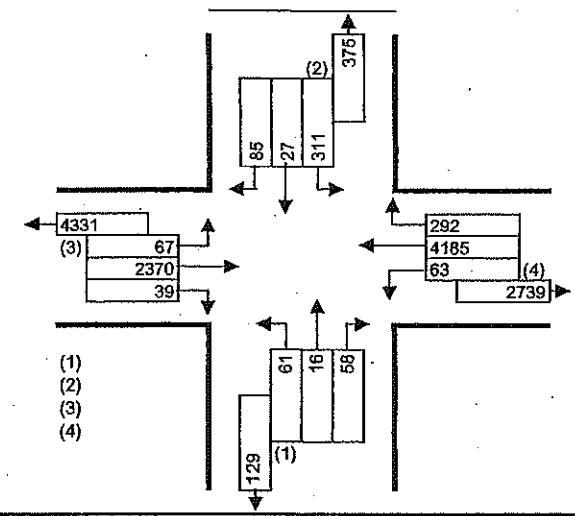

Phasing (Φ)			
1	2	3	4
5	6	7	8

Intersection Control Type:
Signal X Stop _____ Ways _____

No. of Lanes		Lane Use Factor
1	=	1.00
2	=	0.55
3	=	0.40
4	=	0.30
Dble. Left	=	0.60
Trpl. Left	=	0.50

Level of Service		Critical Lane Vol. Total
A	≤	1000
B	≤	1150
C	≤	1300
D	≤	1450
E	≤	1600
F	>	1600

Opposing Volume (vph)		PCE
≤	199	1.1
≤	599	2.0
≤	799	3.0
≤	999	4.0
>	1000	5.0

Φ	Movement	Volume (1)	Lane Use Factor (2)	Lane Volume (1)*(2)=(3)	Opposing Lefts (4)	Lefts Lane Use Factor (5)	Left Volume (4)*(5)=(6)	Critical Lane Volume (3)+(6)	*
	NBTL	53	1.00	53	0	1.00	0	53	*
	SBL	281	0.60	169	0	1.00	0	169	*
	EBT	3789	0.30	1137	81	1.00	81	1218	*
	WBT	1364	0.30	409	73	1.00	73	482	

Remarks: SBR = 110-73 = 37

* Critical Volume.

AM TOTAL 1439
v/c = 0.90 LOS D

Φ	Movement	Volume (1)	Lane Use Factor (2)	Lane Volume (1)*(2)=(3)	Opposing Lefts (4)	Lefts Lane Use Factor (5)	Left Volume (4)*(5)=(6)	Critical Lane Volume (3)+(6)	*
	NBTL	77	1.00	77	0	1.00	0	77	*
	SBL	311	0.60	187	0	1.00	0	187	*
	EBT	2370	0.30	711	63	1.00	63	774	
	WBT	4185	0.30	1256	67	1.00	67	1323	*

Remarks: SBR = 85 - 67 = 18

* Critical Volume.

PM TOTAL 1586
v/c = 0.99 LOS E

Turning Movement Summary and Level of Service

Count Date: 2025 | Location: MD 140 & Gorsuch Rd
Condition: TSM - As Shown on the Alt 2 Map
Design Year:
Computed by: RLT Date: 4/26/2004 | Checked by: TAR Date: 5/6/2004

URS

AM PEAK HOUR:

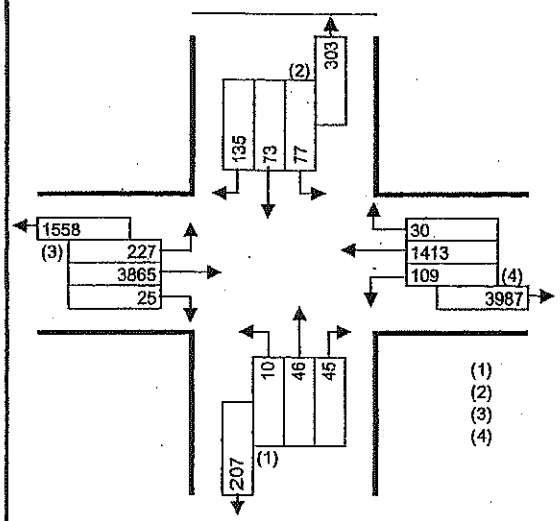

Split Phase Signal Operation

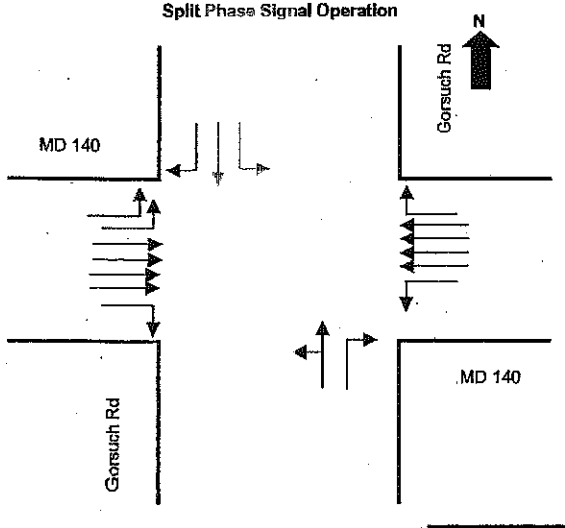

PM PEAK HOUR:

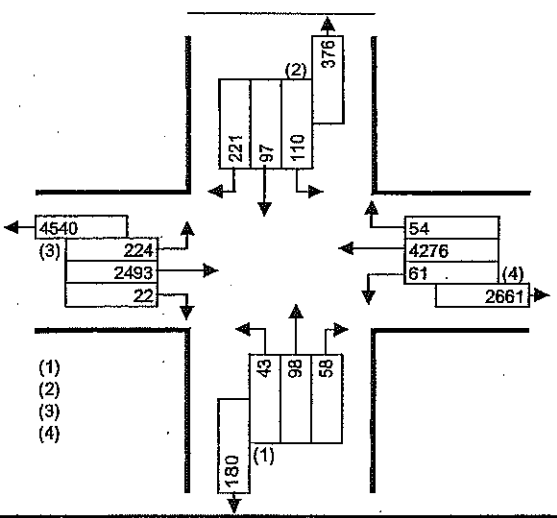

Phasing (Φ)			
1	2	3	4
5	6	7	8

Intersection Control Type:
Signal X Stop ____ Ways ____

No. of Lanes		Lane Use Factor
1	=	1.00
2	=	0.55
3	=	0.40
4	=	0.30
Dble. Left	=	0.60
Trpl. Left	=	0.50

Level of Service		Critical Lane Vol. Total
A	≤	1000
B	≤	1150
C	≤	1300
D	≤	1450
E	≤	1600
F	>	1600

Opposing Volume (vph)		PCE
≤	199	1.1
≤	599	2.0
≤	799	3.0
≤	999	4.0
>	1000	5.0

Φ	Movement	Volume (1)	Lane Use Factor (2)	Lane Volume (1)*(2)=(3)	Opposing Lefts (4)	Lefts Lane Use Factor (5)	Left Volume (4)*(5)=(6)	Critical Lane Volume (3)+(6)	*
	NBTL	56	1.00	56	0	1.00	0	56	*
	SBL	77	1.00	77	0	1.00	0	77	*
	EBT	3865	0.30	1160	109	1.00	109	1269	*
	WBT	1413	0.30	424	227	0.60	136	560	

Remarks: SBR: 135 - 227*0.6 < 0 NBR: 45 - 109 < 0

AM TOTAL 1402
v/c = 0.88 LOS D

* Critical Volume.

Φ	Movement	Volume (1)	Lane Use Factor (2)	Lane Volume (1)*(2)=(3)	Opposing Lefts (4)	Lefts Lane Use Factor (5)	Left Volume (4)*(5)=(6)	Critical Lane Volume (3)+(6)	*
	NBTL	141	1.00	141	0	1.00	0	141	*
	SBL	110	1.00	110	0	1.00	0	110	*
	EBT	2493	0.30	748	61	1.00	61	809	
	WBT	4276	0.30	1283	224	0.60	134	1417	*

Remarks: SBR: 221 - 224*0.6 = 87 NBR: 58 - 61 < 0

PM TOTAL 1668
v/c = 1.04 LOS F

* Critical Volume.

Turning Movement Summary and Level of Service

Count Date:
Condition: CFI - AM Peak Hour
Design Year: 2025
Computed by: RLT Date: 4/14/2004

Location: MD 140 @ Englar Road
Checked by: TAR Date: 4/22/2004

URS

Sheet 1 of 4

See Sheets 3 and 4 for lane configurations and phasing.

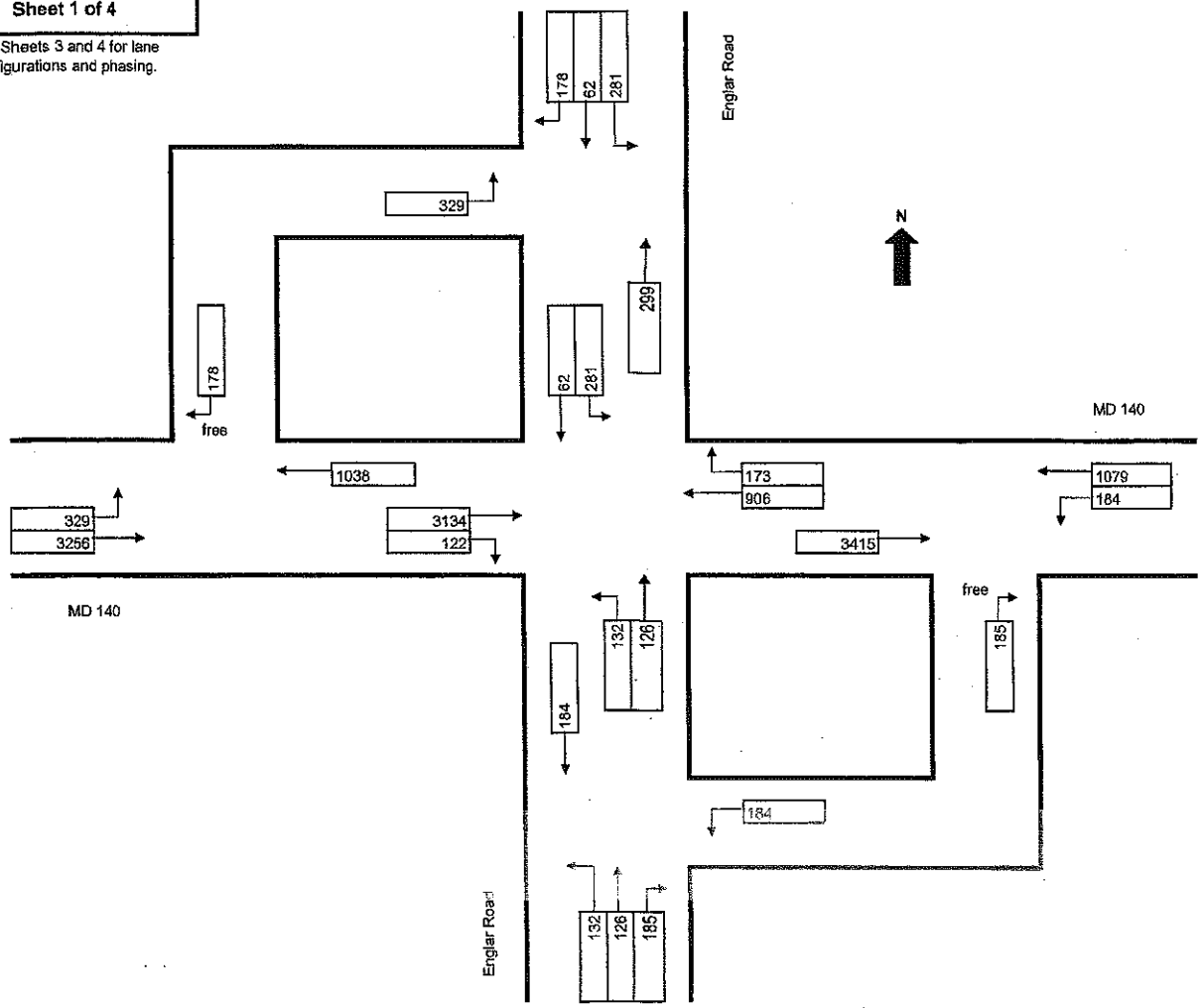

Φ	Movement	Volume (1)	Lane Use Factor (2)	Lane Volume (1)*(2)=(3)	Opposing Lefts (4)	Lefts Lane Use Factor (5)	Left Volume (4)*(5)=(6)	Critical Lane Volume (3)+(6)	*	Intersection CLV	*
	Western Intersection										
	WBT	1038	0.40	415	329	0.60	197	613	*	613	
	Eastern Intersection										
	EBT	3415	0.40	1366	184	0.60	110	1476	*	1476	
	Northern Intersection										
	SBT	62	1.00	62	0	1.00	0	62			
	SBL	281	0.60	169	0	1.00	0	169	*	366	
	NBT	299	0.55	164	0	1.00	0	164			
	EBL	329	0.60	197	0	1.00	0	197	*		
	Southern Intersection										
	SBT	184	0.55	101	0	1.00	0	101			
	NBT	126	1.00	126	0	1.00	0	126		242	
	NBL	132	1.00	132	0	1.00	0	132	*		
	WBL	184	0.60	110	0	1.00	0	110	*		
	Central Intersection										
	NBT	126	1.00	126	281	0.60	169	295	*		
	SBT	62	1.00	62	132	1.00	132	194			
	EBT	3134	0.40	1254	0	1.00	0	1254	*	1548	*
	EBR	43	1.00	43	0	1.00	0	43			
	WBT	906	0.40	362	0	1.00	0	362			
	WBR	4	1.00	4	0	1.00	0	4			

No. of Lanes		Lane Use Factor
1	=	1.00
2	=	0.55
3	=	0.40
4	=	0.30
Dble. Left	=	0.60
Trpl. Left	=	0.50

Level of Service		Critical Lane Vol. Total
A	≤	1000
B	≤	1150
C	≤	1300
D	≤	1450
E	≤	1600
F	>	1600

SYSTEM CLV	1548	
v/c =	0.97	LOS E

Turning Movement Summary and Level of Service	Count Date:		Location:	MD 140 @ Englar Road	URS
	Condition:	CFI - PM Peak Hour			
	Design Year:	2025			
	Computed by:	RLT Date: 4/14/2004	Checked by:	TAR Date: 4/22/2004	

Sheet 2 of 4

See Sheets 3 and 4 for lane configurations and phasing.

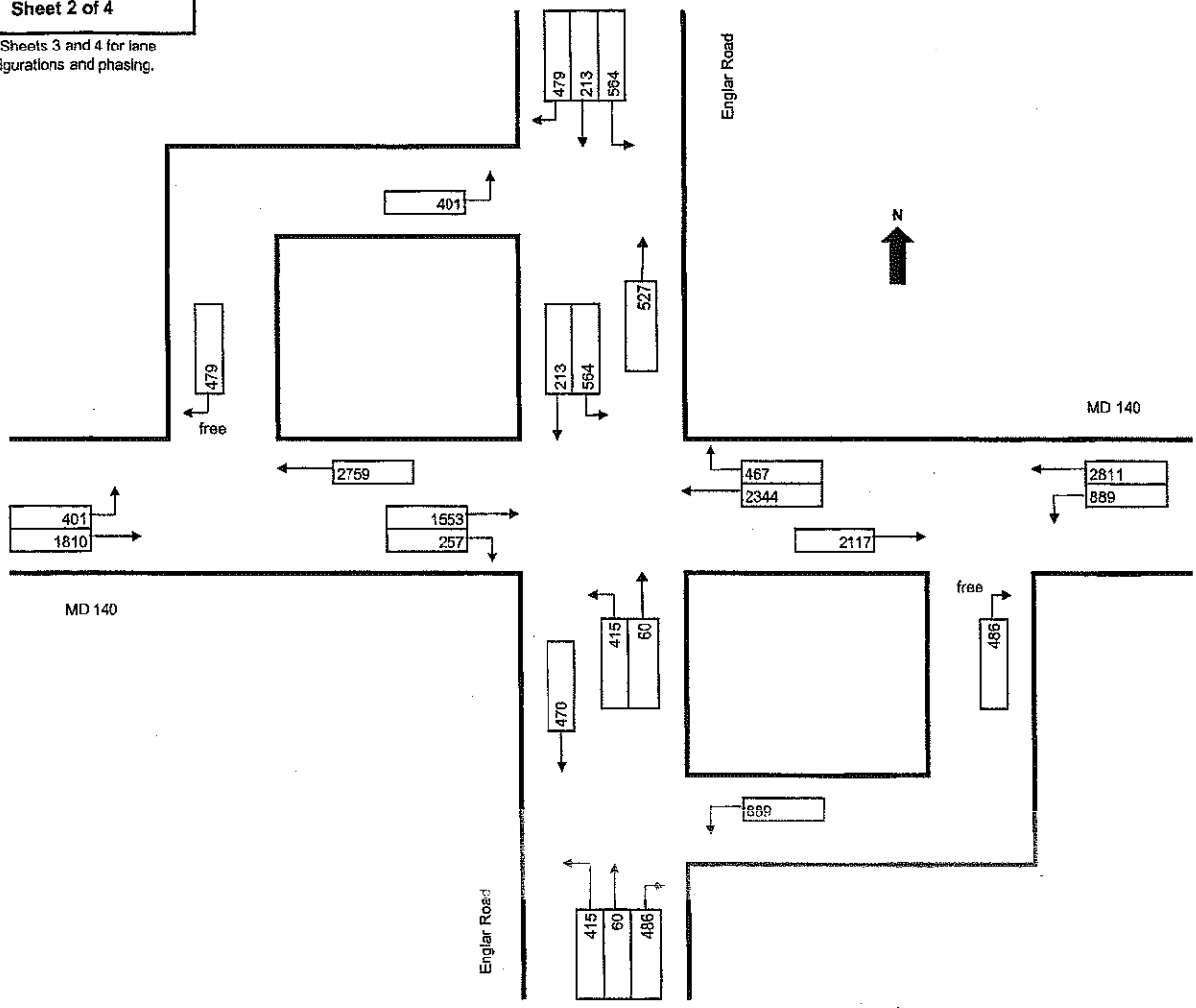

ϕ	Movement	Volume (1)	Lane Use Factor (2)	Lane Volume (1)*(2)=(3)	Opposing Lefts (4)	Lefts Lane Use Factor (5)	Left Volume (4)*(5)=(6)	Critical Lane Volume (3)+(6)	*	Intersection CLV	*
	Western Intersection										
	WBT	2759	0.40	1104	401	0.60	241	1344	*	1344	
	Eastern Intersection										
	EBT	2117	0.40	847	889	0.60	533	1380	*	1380	
	Northern Intersection										
	SBT	213	1.00	213	0	1.00	0	213		579	
	SBL	564	0.60	338	0	1.00	0	338	*		
	NBT	527	0.55	290	0	1.00	0	290			
	EBL	401	0.60	241	0	1.00	0	241	*		
	Southern Intersection										
	SBT	470	0.55	259	0	1.00	0	259		948	
	NBT	60	1.00	60	0	1.00	0	60			
	NBL	415	1.00	415	0	1.00	0	415	*		
	WBL	889	0.60	533	0	1.00	0	533	*		
	Central Intersection										
	NBT	60	1.00	60	564	0.60	338	398		1566	*
	SBT	213	1.00	213	415	1.00	415	628	*		
	EBT	1553	0.40	621	0	1.00	0	621			
	EBR	8	1.00	8	0	1.00	0	8			
	WBT	2344	0.40	938	0	1.00	0	938	*		
	WBR	129	1.00	129	0	1.00	0	129			

No. of Lanes		Lane Use Factor
1	=	1.00
2	=	0.55
3	=	0.40
4	=	0.30
Dble. Left	=	0.60
Trpl. Left	=	0.50

Level of Service		Critical Lane Vol. Total
A	≤	1000
B	≤	1150
C	≤	1300
D	≤	1450
E	≤	1600
F	>	1600

SYSTEM CLV	1566
v/c = 0.98	LOS E

Turning Movement Summary and Level of Service	Count Date:		Location:	MD 140 @ Englar Road	URS
	Condition:	CFI - Lane Configuration			
	Design Year:	2025			
	Computed by:	RLT Date: 4/6/2004	Checked by:	TAR Date: 4/7/2004	

Sheet 3 of 4

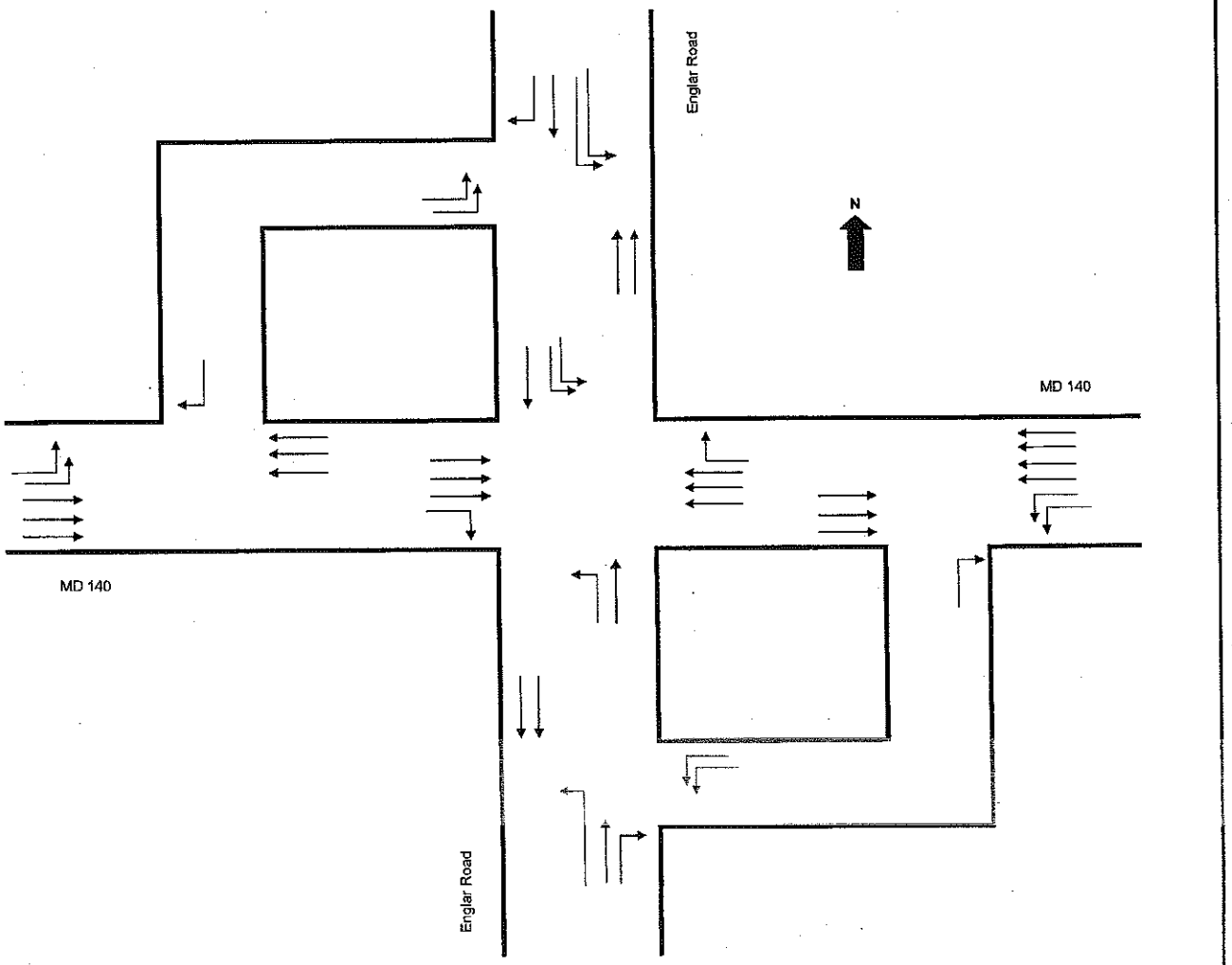

Turning Movement Summary and Level of Service

Count Date:
Condition: CFI - Signal Phasing
Design Year: 2025
Computed by: RLT Date: 4/6/2004

Location: MD 140 @ Englar Road
Checked by: TAR Date: 4/7/2004

URS

Sheet 4 of 4

Phase 1

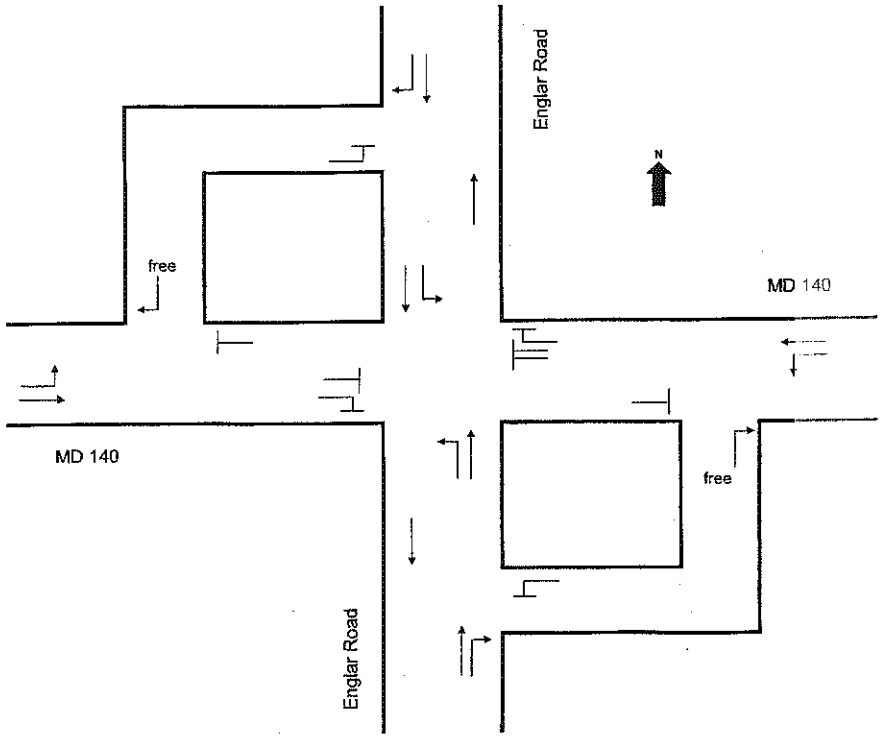

Phase 2

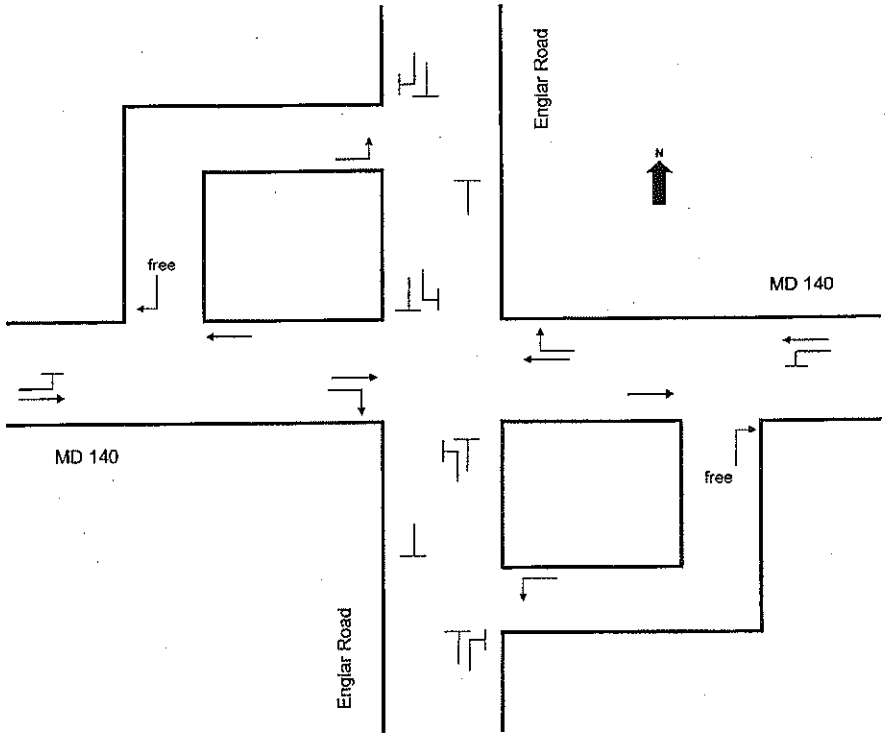

Turning Movement Summary and Level of Service

Count Date:
Condition: CFI - AM Peak Hour
Design Year: 2025
Computed by: RLT Date: 4/6/2004

Location: MD 140 @ Center Street
Checked by: TAR Date: 4/7/2004

URS

Sheet 1 of 4

See Sheets 3 and 4 for lane configurations and phasing.

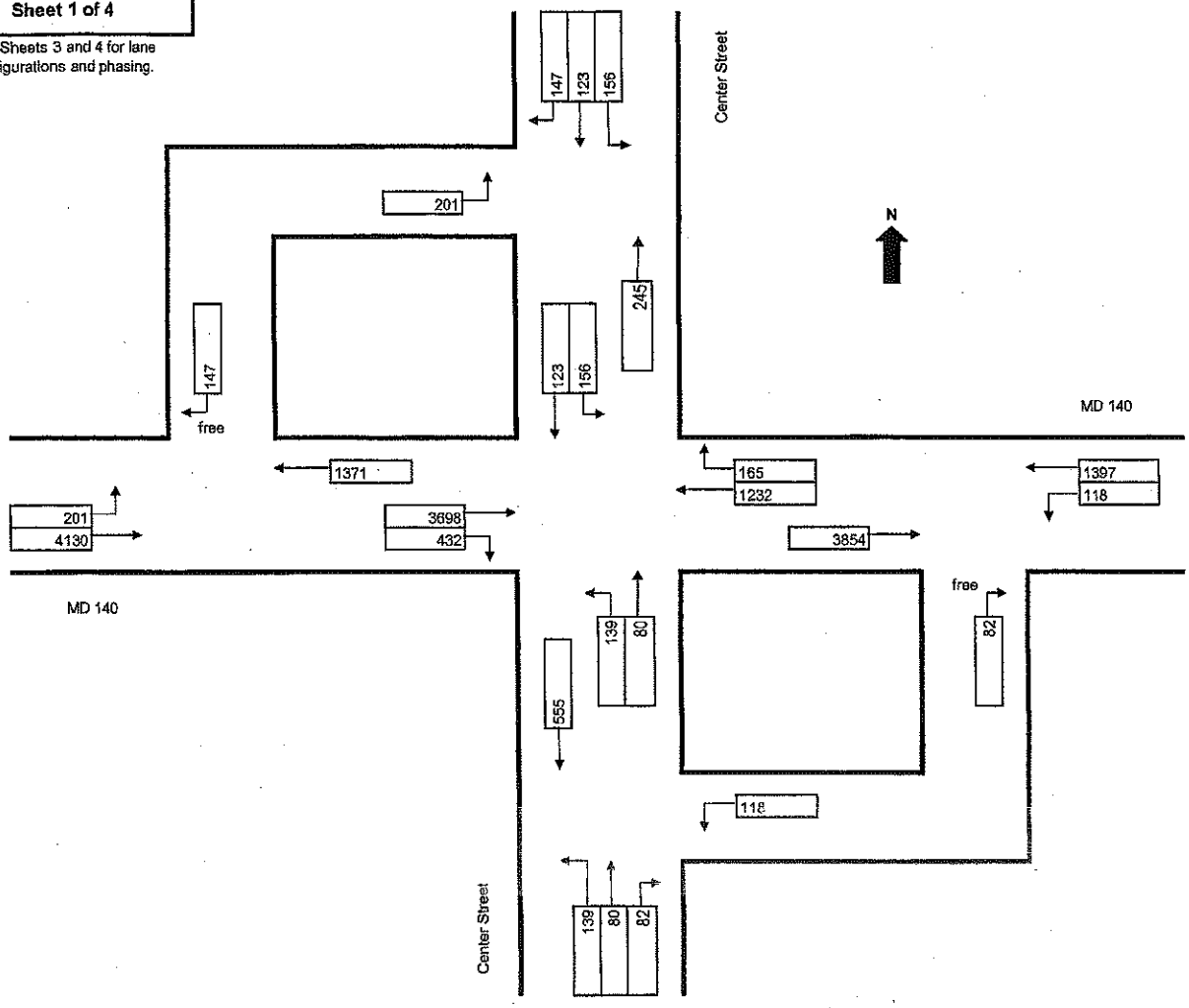

Φ	Movement	Volume (1)	Lane Use Factor (2)	Lane Volume (1)*(2)=(3)	Opposing Lefts (4)	Lefts Lane Use Factor (5)	Left Volume (4)*(5)=(6)	Critical Lane Volume (3)+(6)	*	Intersection CLV	*
	Western Intersection										
	WBT	1371	0.40	548	201	0.60	121	669	*	669	
	Eastern Intersection										
	EBT	3854	0.40	1542	118	0.60	71	1612	*	1612	
	Northern Intersection										
	SBT	123	0.55	68	0	1.00	0	68		255	
	SBL	156	0.60	94	0	1.00	0	94			
	NBT	245	0.55	135	0	1.00	0	135	*		
	EBL	201	0.60	121	0	1.00	0	121	*		
	Southern Intersection										
	SBT	555	0.55	305	0	1.00	0	305	*	376	
	NBT	80	0.55	44	0	1.00	0	44			
	NBL	139	0.60	83	0	1.00	0	83			
	WBL	118	0.60	71	0	1.00	0	71	*		
	Central Intersection										
	NBT	80	0.55	44	156	0.60	94	138		1630	*
	SBT	123	0.55	68	139	0.60	83	151	*		
	EBT	3698	0.40	1479	0	1.00	0	1479	*		
	EBR	349	1.00	349	0	1.00	0	349			
	WBT	1232	0.40	493	0	1.00	0	493			
	WBR	71	1.00	71	0	1.00	0	71			

No. of Lanes	Lane Use Factor
1	= 1.00
2	= 0.55
3	= 0.40
4	= 0.30
Dbls. Left	= 0.60
Trpl. Left	= 0.50

Level of Service	Critical Lane Vol. Total
A	≤ 1000
B	≤ 1150
C	≤ 1300
D	≤ 1450
E	≤ 1600
F	> 1600

SYSTEM CLV 1630

v/c = 1.02 LOS F

Turning Movement Summary and Level of Service

Count Date:
Condition: CFI - PM Peak Hour
Design Year: 2025
Computed by: RLT Date: 4/6/2004

Location: MD 140 @ Center Street
Checked by: TAR Date: 4/7/2004

URS

Sheet 2 of 4

See Sheets 3 and 4 for lane configurations and phasing.

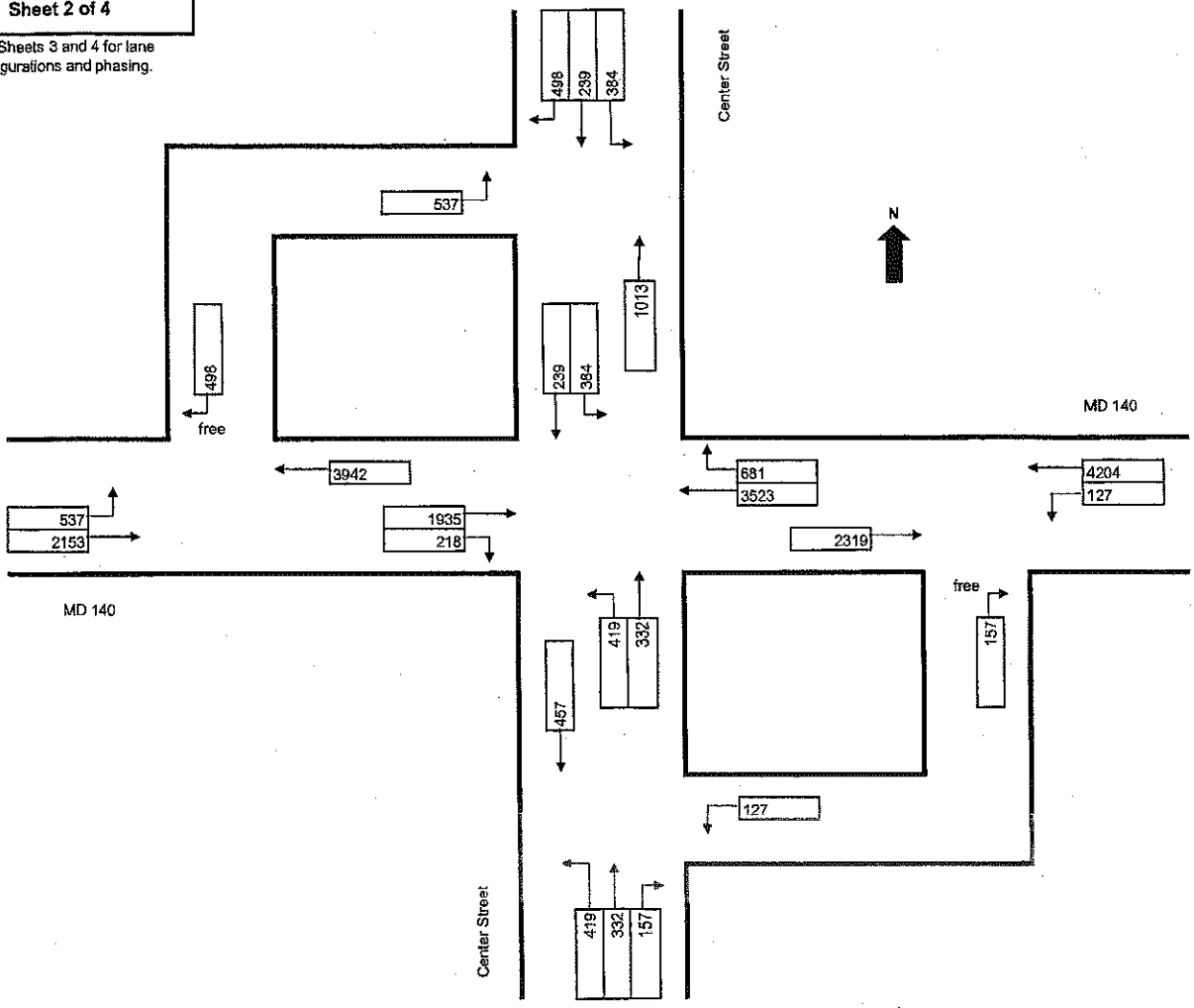

Φ	Movement	Volume (1)	Lane Use Factor (2)	Lane Volume (1)*(2)=(3)	Opposing Lefts (4)	Lefts Lane Use Factor (5)	Left Volume (4)*(5)=(6)	Critical Lane Volume (3)+(6)	*	Intersection CLV	*
	Western Intersection										
	WBT	3942	0.40	1577	537	0.60	322	1899	*	1899	
	Eastern Intersection										
	EBT	2319	0.40	928	127	0.60	76	1004	*	1004	
	Northern Intersection										
	SBT	239	0.55	131	0	1.00	0	131		879	
	SBL	384	0.60	230	0	1.00	0	230			
	NBT	1013	0.55	557	0	1.00	0	557	*		
	EBL	537	0.60	322	0	1.00	0	322	*		
	Southern Intersection										
	SBT	457	0.55	251	0	1.00	0	251	*	328	
	NBT	332	0.55	183	0	1.00	0	183			
	NBL	419	0.60	251	0	1.00	0	251			
	WBL	127	0.60	76	0	1.00	0	76	*		
	Central Intersection										
	NBT	332	0.55	183	384	0.60	230	413	*	1822	*
	SBT	239	0.55	131	419	0.60	251	383			
	EBT	1935	0.40	774	0	1.00	0	774			
	EBR	0	1.00	0	0	1.00	0	0			
	WBT	3523	0.40	1409	0	1.00	0	1409	*		
	WBR	451	1.00	451	0	1.00	0	451			

No. of Lanes	Lane Use Factor
1	= 1.00
2	= 0.55
3	= 0.40
4	= 0.30
Dble. Left	= 0.60
Trpl. Left	= 0.50

Level of Service	Critical Lane Vol. Total
A	≤ 1000
B	≤ 1150
C	≤ 1300
D	≤ 1450
E	≤ 1600
F	> 1600

SYSTEM CLV	1822	
v/c = 1.14	LOS	F

Turning Movement Summary and Level of Service	Count Date:		Location:	MD 140 @ Center Street	URS
	Condition:	CFI - Lane Configuration			
	Design Year:	2025			
	Computed by:	RLT Date: 4/6/2004	Checked by:	TAR Date: 4/7/2004	

Sheet 3 of 4

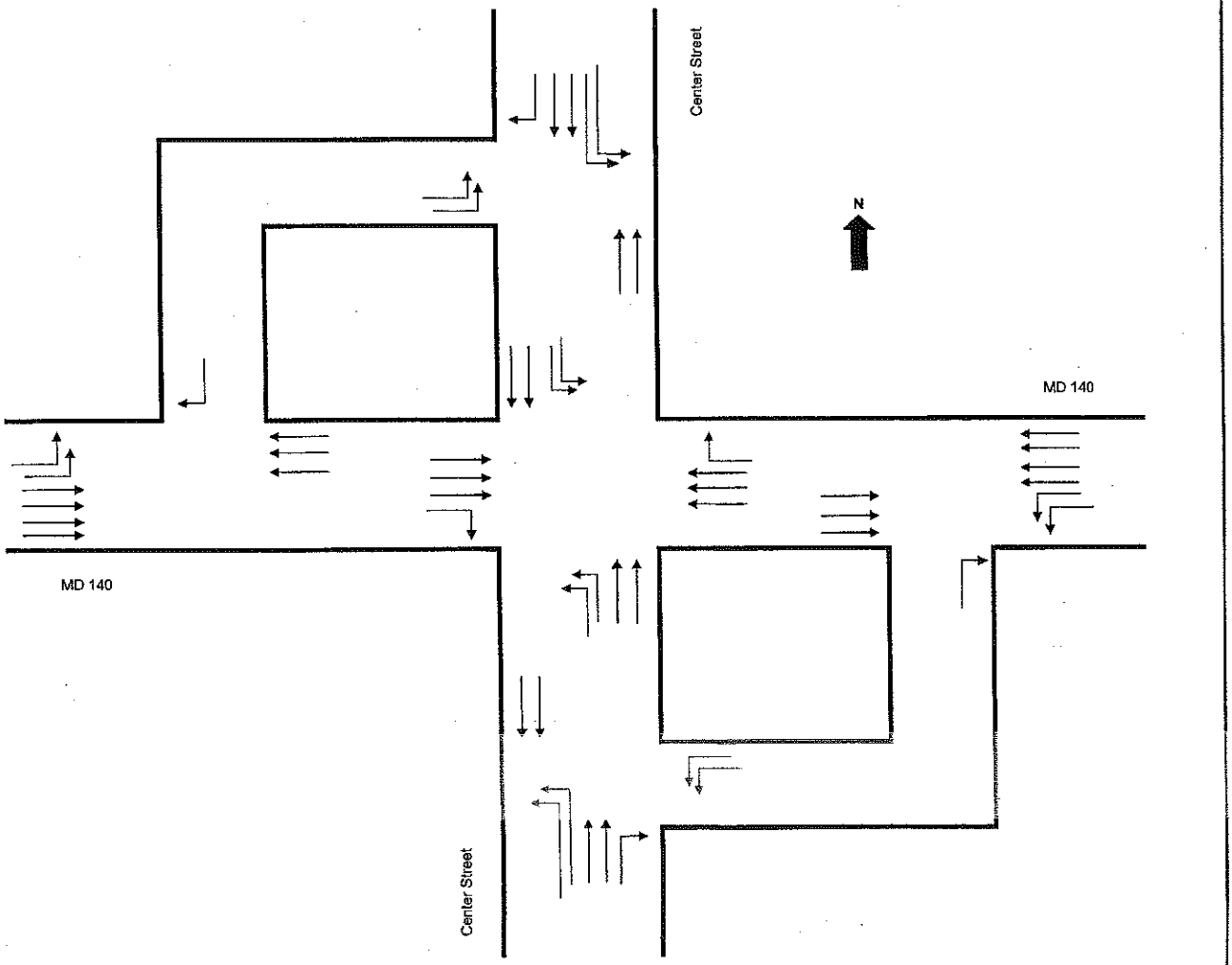

Turning Movement Summary and Level of Service

Count Date:
Condition: CFI - Signal Phasing
Design Year: 2025
Computed by: RLT Date: 4/6/2004

Location: MD 140 @ Center Street
Checked by: TAR Date: 4/7/2004

URS

Sheet 4 of 4

Phase 1

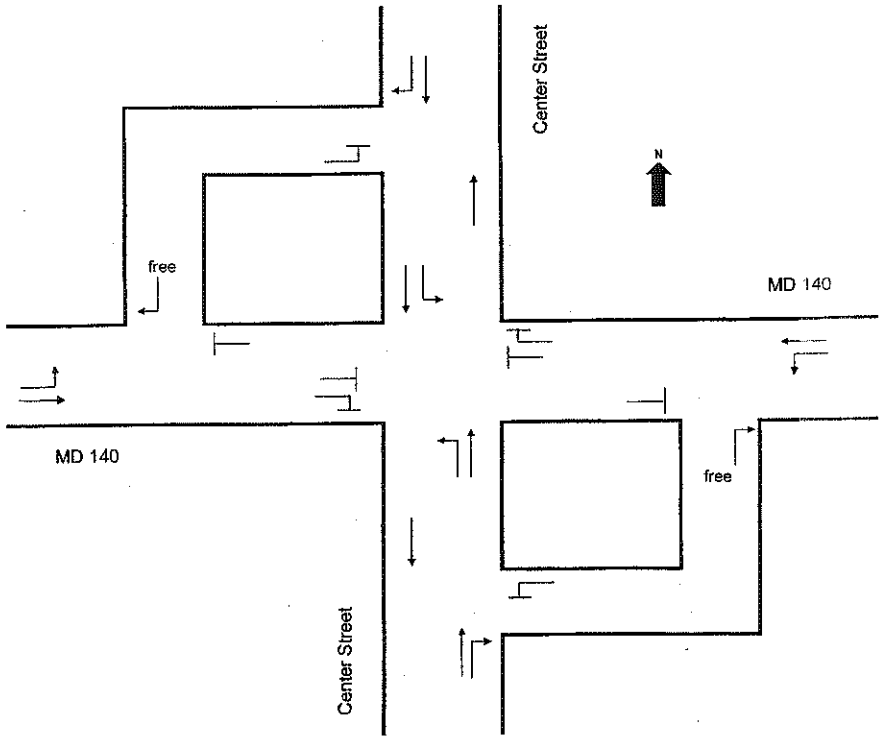

Phase 2

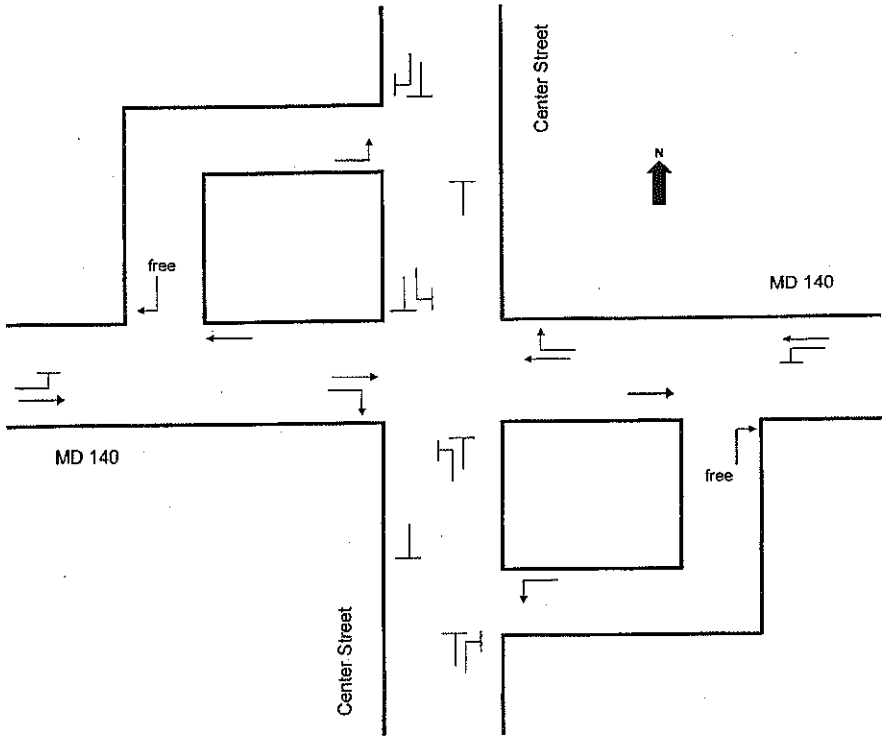

Turning Movement Summary and Level of Service

Count Date:
Condition: CFI - AM Peak Hour
Design Year: 2025
Computed by: RLT Date: 4/20/2004

Location: MD 140 @ Malcom Drive
Checked by: TAR Date: 4/22/2004

URS

Sheet 1 of 4

See Sheets 3 and 4 for lane configurations and phasing.

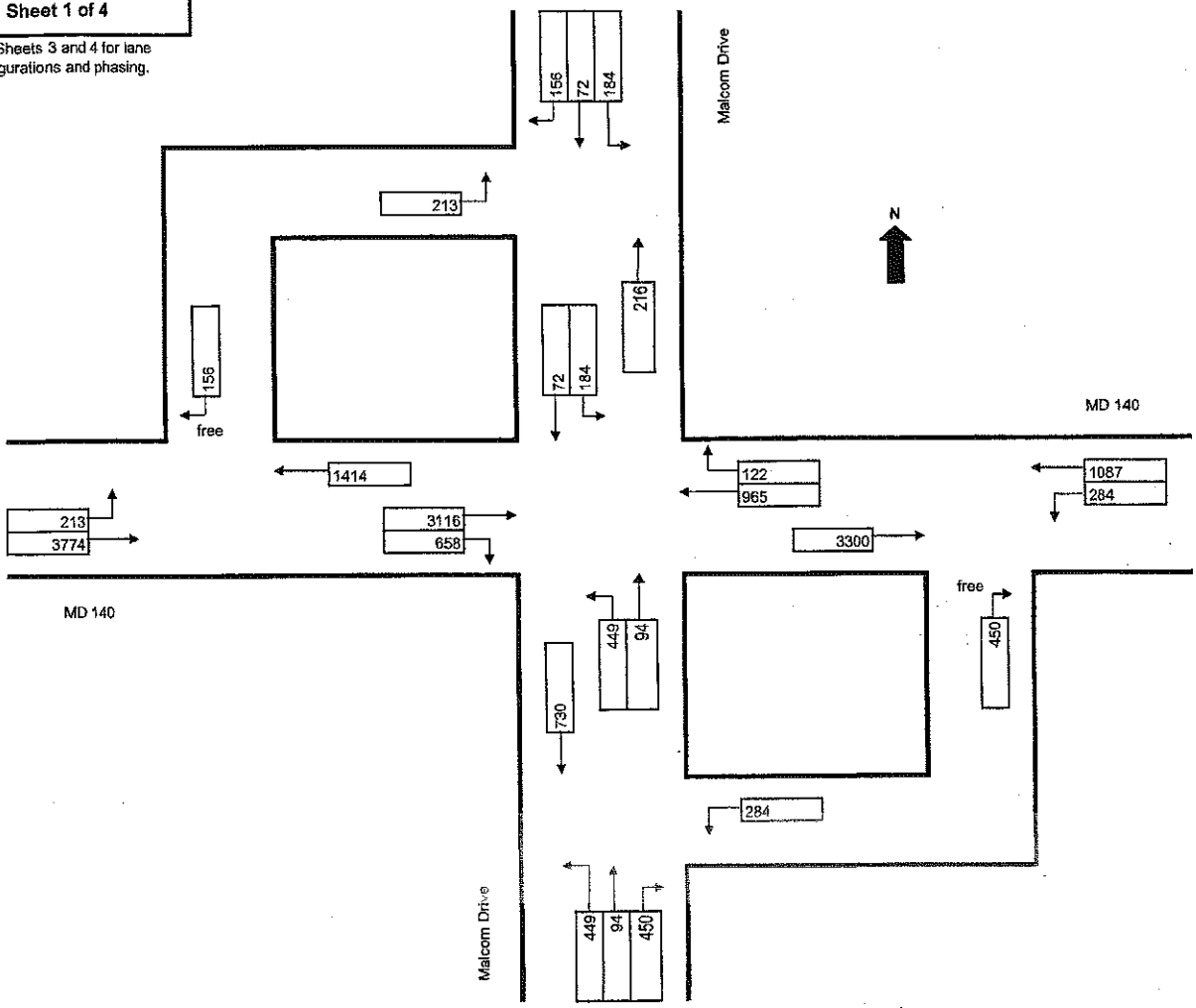

Φ	Movement	Volume (1)	Lane Use Factor (2)	Lane Volume (1)*(2)=(3)	Opposing Lefts (4)	Lefts Lane Use Factor (5)	Left Volume (4)*(5)=(6)	Critical Lane Volume (3)+(6)	*	Intersection CLV	*
	Western Intersection										
	WBT	1414	0.40	566	213	0.60	128	693	*	693	
	Eastern Intersection										
	EBT	3300	0.40	1320	284	0.60	170	1490	*	1490	
	Northern Intersection										
	SBT	72	0.55	40	0	1.00	0	40		344	
	SBL	184	0.60	110	0	1.00	0	110			
	NBT	216	1.00	216	0	1.00	0	216	*		
	EBL	213	0.60	128	0	1.00	0	128	*		
	Southern Intersection										
	SBT	730	0.55	402	0	1.00	0	402	*	572	
	NBT	94	1.00	94	0	1.00	0	94			
	NBL	449	0.50	225	0	1.00	0	225			
	WBL	284	0.60	170	0	1.00	0	170	*		
	Central Intersection										
	NBL	449	0.50	225	0	1.00	0	225	*	1581	*
	SBL	184	0.60	110	0	1.00	0	110	*		
	EBT	3116	0.40	1246	0	1.00	0	1246	*		
	EBR	389	1.00	389	0	1.00	0	389			
	WBT	985	0.40	386	0	1.00	0	386			
	WBR	12	1.00	12	0	1.00	0	12			

No. of Lanes	Lane Use Factor
1	= 1.00
2	= 0.55
3	= 0.40
4	= 0.30
Dble. Left	= 0.60
Trpl. Left	= 0.50

Level of Service	Critical Lane Vol. Total
A	≤ 1000
B	≤ 1150
C	≤ 1300
D	≤ 1450
E	≤ 1600
F	> 1600

SYSTEM CLV 1581

v/c = 0.99 LOS E

Turning Movement Summary and Level of Service

Count Date:
Condition: CFI - PM Peak Hour
Design Year: 2025
Computed by: RLT Date: 4/20/2004

Location: MD 140 @ Malcom Drive
Checked by: TAR Date: 4/22/2004

URS

Sheet 2 of 4

See Sheets 3 and 4 for lane configurations and phasing.

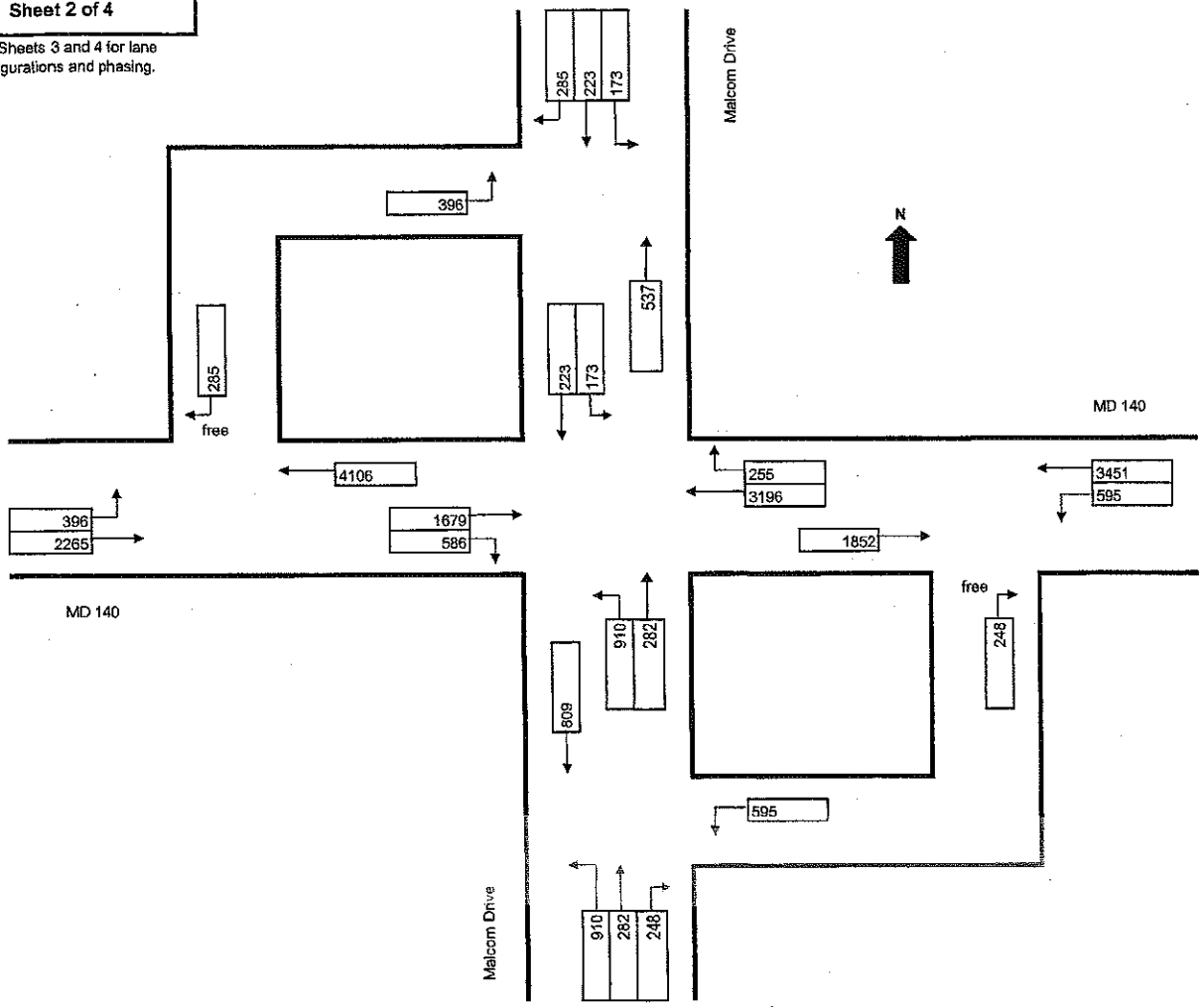

Φ	Movement	Volume (1)	Lane Use Factor (2)	Lane Volume (1)*(2)=(3)	Opposing Lefts (4)	Lefts Lane Use Factor (5)	Left Volume (4)*(5)=(6)	Critical Lane Volume (3)+(6)	*	Intersection CLV	*
	Western Intersection										
	WBT	4106	0.40	1642	396	0.60	238	1880	*	1880	*
	Eastern Intersection										
	EBT	1852	0.40	741	595	0.60	357	1098	*	1098	
	Northern Intersection										
	SBT	223	0.55	123	0	1.00	0	123		775	
	SBL	173	0.60	104	0	1.00	0	104			
	NBT	537	1.00	537	0	1.00	0	537	*		
	EBL	396	0.60	238	0	1.00	0	238	*		
	Southern Intersection										
	SBT	809	0.55	445	0	1.00	0	445		812	
	NBT	282	1.00	282	0	1.00	0	282			
	NBL	910	0.50	455	0	1.00	0	455	*		
	WBL	595	0.60	357	0	1.00	0	357	*		
	Central Intersection										
	NBL	910	0.50	455	0	1.00	0	455	*	1856	
	SBT	223	0.55	123	0	1.00	0	123	*		
	EBT	1679	0.40	672	0	1.00	0	672			
	EBR	40	1.00	40	0	1.00	0	40			
	WBT	3196	0.40	1278	0	1.00	0	1278	*		
	WBR	151	1.00	151	0	1.00	0	151			

No. of Lanes	Lane Use Factor
1	= 1.00
2	= 0.55
3	= 0.40
4	= 0.30
Dble. Left	= 0.60
Trpl. Left	= 0.50

Level of Service	Critical Lane Vol. Total
A	≤ 1000
B	≤ 1150
C	≤ 1300
D	≤ 1450
E	≤ 1600
F	> 1600

SYSTEM CLV	1880
v/c = 1.18	LOS F

Turning Movement Summary and Level of Service	Count Date:		Location:	MD 140 @ Malcom Drive	URS
	Condition:	CFI - Lane Configuration			
	Design Year:	2025			
	Computed by:	RLT Date: 4/20/2004	Checked by:	TAR Date: 4/22/2004	

Sheet 3 of 4

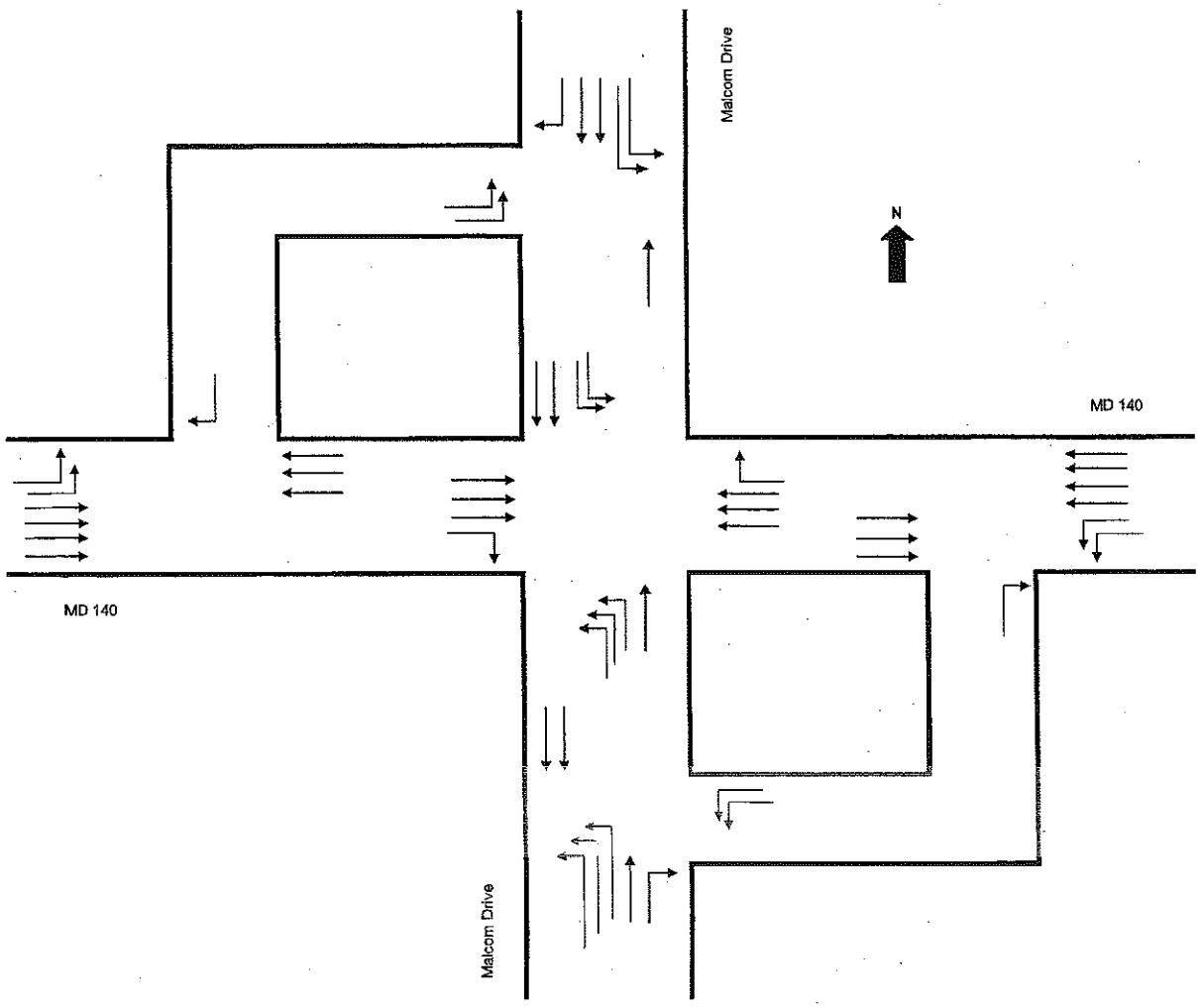

Turning Movement Summary and Level of Service	Count Date:		Location: MD 140 @ Malcom Drive	URS
	Condition: CFI - Signal Phasing			
	Design Year: 2025			
	Computed by: RLT	Date: 4/6/2004	Checked by: TAR	Date: 4/7/2004

Sheet 4 of 4

Phase 1

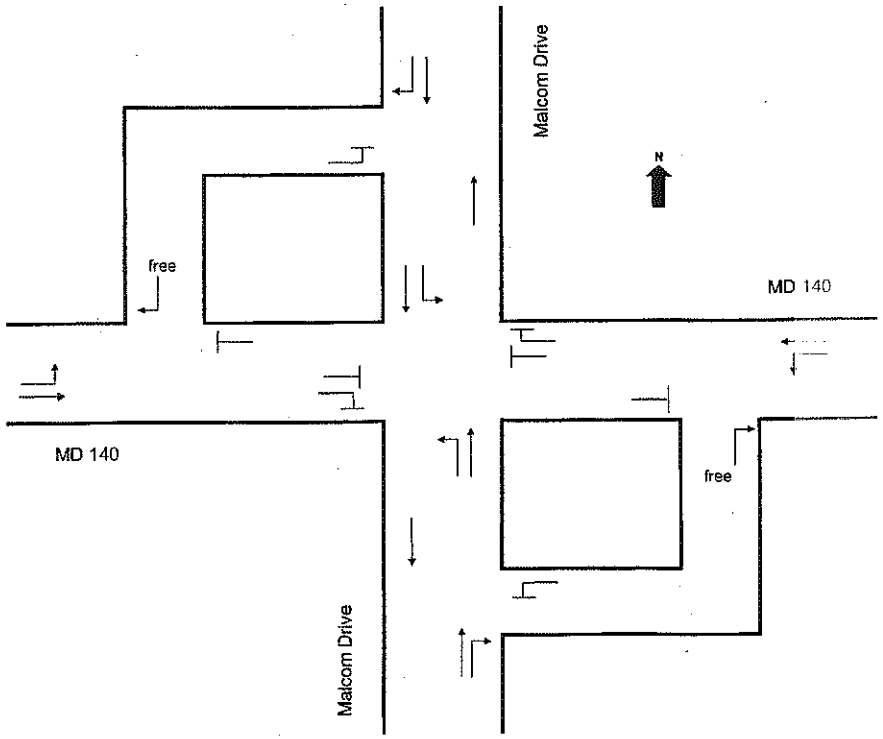

Phase 2

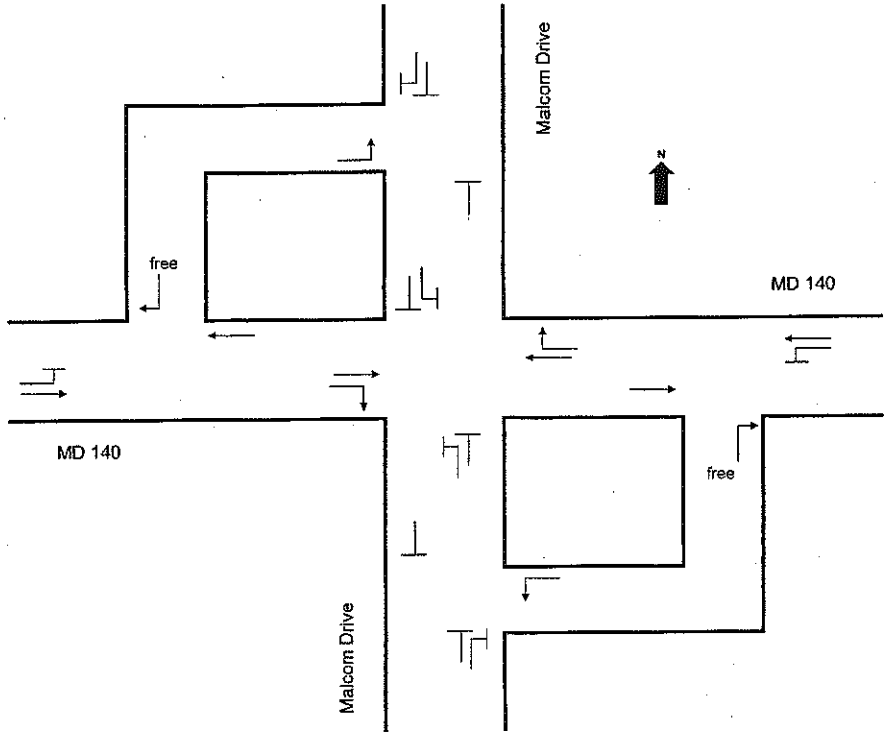

Turning Movement Summary and Level of Service

Count Date:
Condition: CFI - AM Peak Hour
Design Year: 2025
Computed by: RLT Date: 4/14/2004

Location: MD 140 @ Market Street
Checked by: TAR Date: 4/22/2004

URS

Sheet 1 of 4

See Sheets 3 and 4 for lane configurations and phasing.

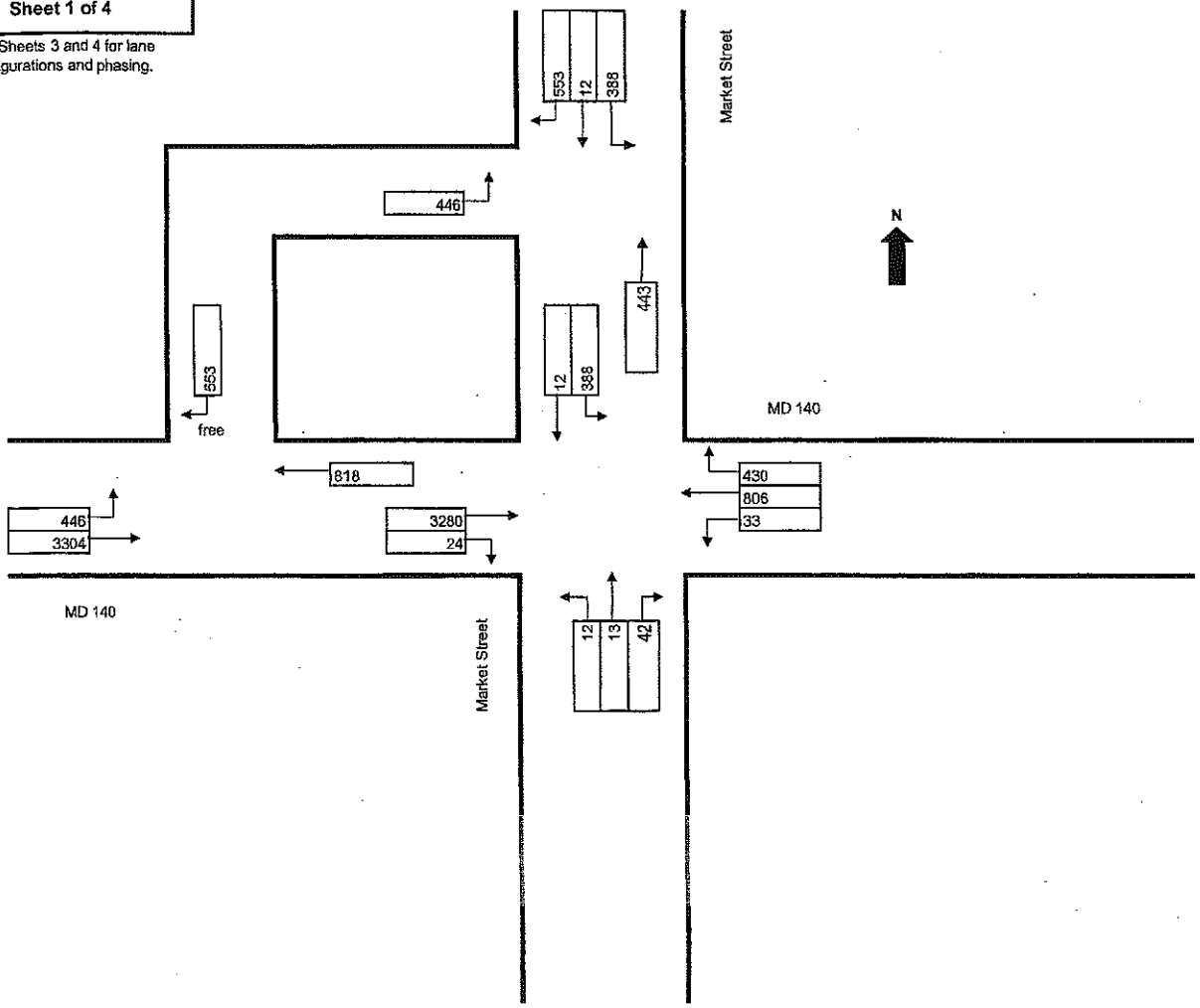

Φ	Movement	Volume (1)	Lane Use Factor (2)	Lane Volume (1)*(2)=(3)	Opposing Lefts (4)	Lefts Lane Use Factor (5)	Left Volume (4)*(5)=(6)	Critical Lane Volume (3)+(6)	*	Intersection CLV	*
	Western Intersection										
	WBT	818	0.40	327	446	0.60	268	595	*	595	
	Northern Intersection										
	SBT	12	0.55	7	0	1.00	0	7			
	SBL	388	0.60	233	0	1.00	0	233		511	
	NBT	443	0.55	244	0	1.00	0	244	*		
	EBL	446	0.60	268	0	1.00	0	268	*		
	Central Intersection										
	NBT	13	1.00	13	388	0.60	233	246	*		
	NBR	9	1.00	9	388	0.60	233	242			
	SBT	12	0.55	7	12	0.60	7	14			
	EBT	3280	0.40	1312	33	1.00	33	1345	*	1591	*
	EBR	17	1.00	17	33	1.00	33	50			
	WBT	806	0.40	322	0	1.00	0	322			
	WBR	197	1.00	197	0	1.00	0	197			

No. of Lanes	Lane Use Factor
1	= 1.00
2	= 0.55
3	= 0.40
4	= 0.30
Dble. Left	= 0.60
Trpl. Left	= 0.50

Level of Service	Critical Lane Vol. Total
A	≤ 1000
B	≤ 1150
C	≤ 1300
D	≤ 1450
E	≤ 1600
F	> 1600

SYSTEM CLV	1591
v/c = 0.99	LOS E

Turning Movement Summary and Level of Service

Count Date:
Condition: CFI - PM Peak Hour
Design Year: 2025
Computed by: RLT Date: 4/14/2004

Location: MD 140 @ Market Street
Checked by: TAR Date: 4/22/2004

URS

Sheet 2 of 4

See Sheets 3 and 4 for lane configurations and phasing.

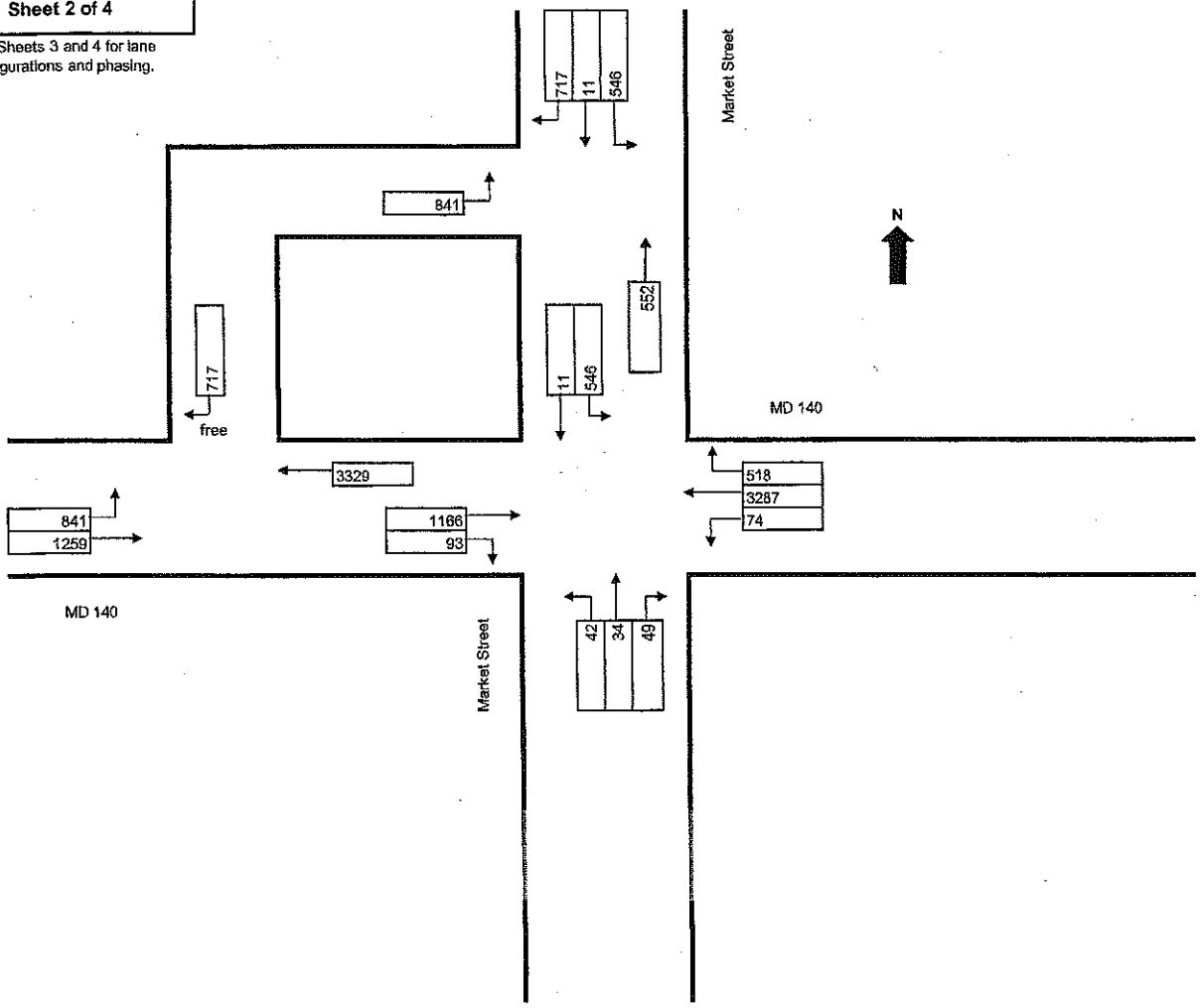

Φ	Movement	Volume (1)	Lane Use Factor (2)	Lane Volume (1)*(2)=(3)	Opposing Lefts (4)	Lefts Lane Use Factor (5)	Left Volume (4)*(5)=(6)	Critical Lane Volume (3)+(6)	*	Intersection CLV	*
	Western Intersection										
	WBT	3329	0.40	1332	841	0.60	505	1836	*	1836	*
	Northern Intersection										
	SBT	11	0.55	6	0	1.00	0	6			
	SBL	546	0.60	328	0	1.00	0	328	*	832	
	NBT	552	0.55	304	0	1.00	0	304			
	EBL	841	0.60	505	0	1.00	0	505	*		
	Central Intersection										
	NBT	34	1.00	34	546	0.60	328	362	*		
	NBR	0	1.00	0	546	0.60	328	328			
	SBT	11	0.55	6	42	0.60	25	31			
	EBT	1166	0.40	466	74	1.00	74	540		1676	
	EBR	68	1.00	68	74	1.00	74	142			
	WBT	3287	0.40	1315	0	1.00	0	1315	*		
	WBR	190	1.00	190	0	1.00	0	190			

No. of Lanes	Lane Use Factor
1	= 1.00
2	= 0.55
3	= 0.40
4	= 0.30
Dble. Left	= 0.60
Trpl. Left	= 0.50

Level of Service	Critical Lane Vol. Total
A	≤ 1000
B	≤ 1150
C	≤ 1300
D	≤ 1450
E	≤ 1600
F	> 1600

SYSTEM CLV	1836
v/c = 1.15	LOS F

Turning Movement Summary and Level of Service	Count Date:		Location:	MD 140 @ Market Street	URS
	Condition:	CFI - Lane Configuration			
	Design Year:	2025			
	Computed by:	RLT Date: 4/14/2004	Checked by:	TAR Date: 4/22/2004	

Sheet 3 of 4

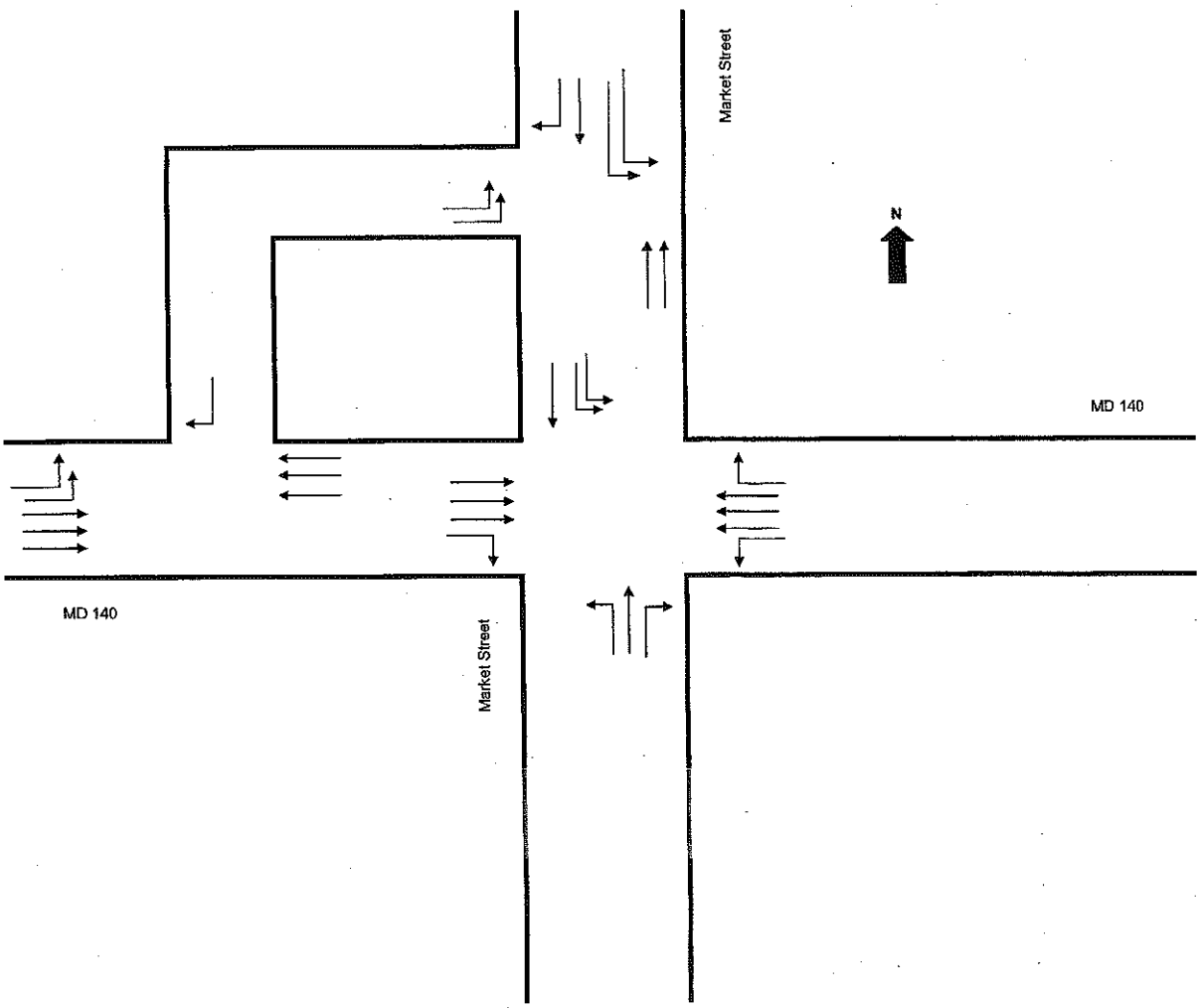

Turning Movement Summary and Level of Service	Count Date:		Location: MD 140 @ Market Street	URS
	Condition: CFI - Signal Phasing			
	Design Year: 2025			
	Computed by: RLT	Date: 4/14/2004	Checked by: TAR	Date: 4/22/2004

Sheet 4 of 4

Phase 1

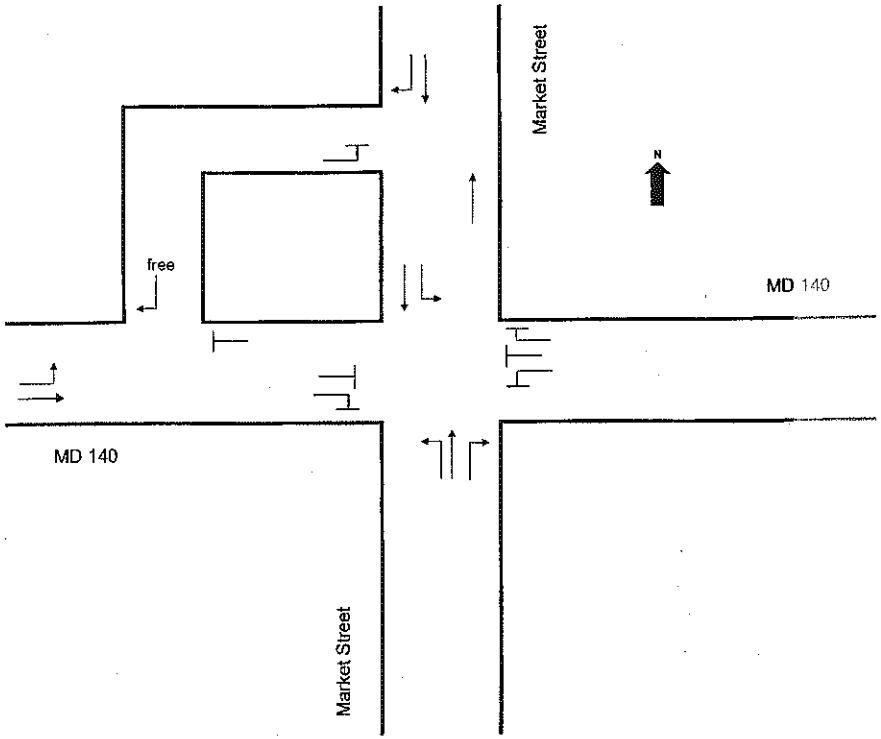

Phase 2

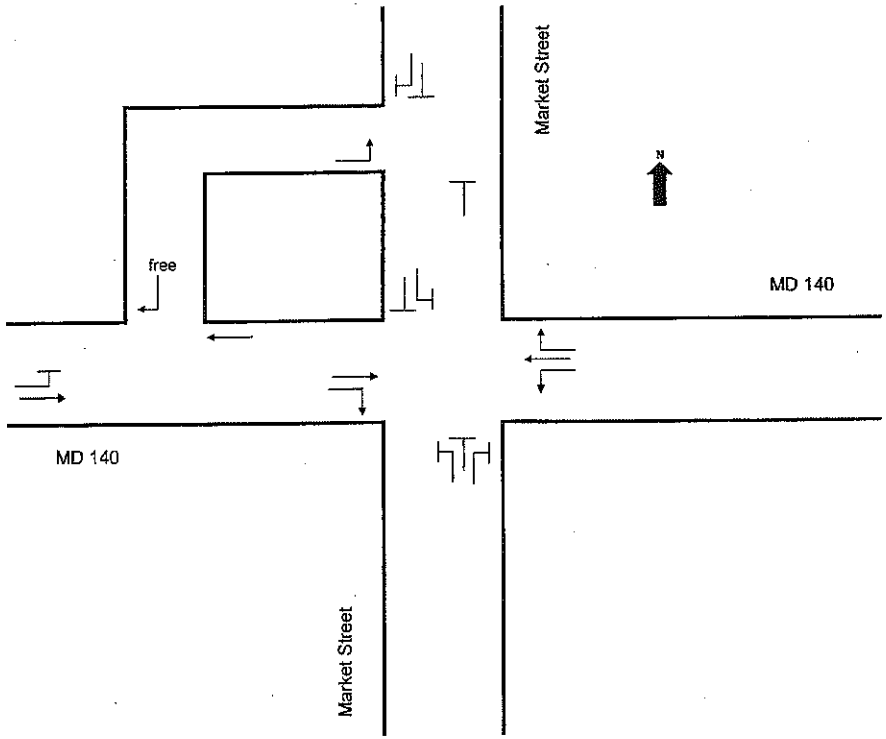

Accident Data

Robert L. Ehrlich, Jr., *Governor*
Michael S. Steele, *Lt. Governor*

SHA State Highway Administration — Driven to Excel

Robert L. Flanagan, *Secretary*
Neil J. Pedersen, *Administrator*

Maryland Department of Transportation

MEMORANDUM

TO: L'Kiesha Markley, Senior Travel Forecaster
Office of Planning and Preliminary Engineering

FROM: Robert L Booker Jr, Transportation Engineering Technician
Traffic Development and Support Division

DATE: January 8, 2007

SUBJECT: Charge No. CL702A11
Accident Data
MD 140 ~ Leidy Road – Sullivan Road
Carroll County

This is in response to your request of December 21, 2006, for accident data along the subject length of MD 140 for the study period of January 1, 2003 through December 31, 2005.

If you have any questions or require additional information, please do not hesitate to contact me at (410) 787-5842, toll-free 888-963-0307, or via e-mail at rbooker@sha.state.md.us .

Attachments

cc: Ms. Jean Cavey
Mr. John Concannon
Mr. David Coyne
Mr. Derek Gunn
Ms. Debra Russell

MD 140 from Leidy Road to Sullivan Road
Accident Analysis – Carroll County

MD 140 from Leidy Road to Sullivan Road experienced a total of 346 accidents from January 1, 2003 through December 31, 2005. The average accident rate for this 2.9 mile study section was 221 accidents for every one hundred million miles of travel (acc/100 mvm). This accident rate did not calculate to be significantly higher than the statewide average accident rate of 248 acc/100mvm for all similarly designed highways now under state maintenance. The accident experience for the study section is listed in Table 1 by severity, year, and rate. The 3-year weighted statewide average collision rate for this type of highway design is also listed for comparison purposes.

Table 1

Severity	*2003*	*2004*	*2005*	*Total*	*Rate/100mvm*	*Statewide Avg. Rate*
Fatal	1	1	0	2	1	2
Injury	48	56	54	158	101	112
Prop. Dam.	66	56	64	186	119	134
Total Acc.	115	113	118	346	221	248

During this study period there were two fatal accidents reported on MD 140, both of which, involved pedestrians. The first, occurred on December 24, 2003 at approximately 6:00 pm, when a vehicle traveling southbound in the turn lane to the Town Mall of Westminster struck a pedestrian attempting to cross the southbound traffic lanes. The second occurred on March 20, 2004 at approximately 8:00 pm, when a vehicle traveling northbound struck a pedestrian, north of Englar Road.

The key collision types and heavy truck involvement within the study area are compared in Table 2 to their respective statewide average accident rates for highways of similar design.

Table 2

Collision Type	*Number of Accidents 2003 – 2005*	*Accident Rate Per 100 mvm*	*Statewide Average Rate*
Rear End	193	123*	92
Angle	37	24	38
Fixed Object	32	20	23
Truck Related	40	26*	16

*Significantly higher than the statewide average rate

Three collision types, rear end, angle, and fixed objects accounted for more than 75% (262 of 346) of all the accidents in the study section. Of these, rear end collisions were the most prominent accident type with 193 police-reported accidents with a significantly high rate of 123 acc/100 mvm. Most of these rear end accidents were found within seven distinct clusters along MD 140. Over half, 52% (100 of 193), of the total rear end accidents were intersection related. The top four intersections with rear end collisions included MD 140 at Old Baltimore Road & Market Street (29 occurrences), MD 140 at Malcolm Drive (27 occurrences), MD 140 at Englar Road (19 occurrences), and MD 140 at Sullivan Road (19 occurrences). Of all the 193 rear end accidents, 27% (52 of 193), accidents occurred under wet surface conditions. The largest concentration of wet

surface collisions was in the vicinity of MD 140 at Old Baltimore Road & Market Street (13 of 52 occurrences). Over 76% (119 of 157) of the total rear end accidents occurred between the hours of 12:00 noon and 6:00 pm and 23% (44 of 193) occurred on the sixth day of the week (Friday).

The next largest accident category was angle collisions. During the study period there were 37 police-reported accidents. 89% (33 of 37) of the total angle collisions were intersection-related. Most of these 33 accidents occurred at the following intersections: MD 140 at Englar Road (11 occurrences), MD 140 at Old Baltimore Road & Market Street (9 occurrences), and MD 140 at Ralph Street & Cranberry Road South (6 occurrences). Nearly, 38% (14 of 37) of the angle collisions occurred between the hours of 10:00 am and 1:00 pm. Of all the angle collisions, 81% (30 of 37) occurred between the second and fifth days of the week (Monday through Thursday).

The third important collision type within this MD 140 study area was fixed object, with 32 police-reported accidents during the study period. Wet surface conditions did not appear to be a major factor in these occurrences with less than 28% (9 of 32) being recorded. There was a fall and rise, over the study period, in the accident frequency for this collision type - year 2003 experienced 13 accidents, year 2004 experienced 7 accidents, and year 2005 experienced 12 accidents. Of all the fixed object collisions, 28% (9 of 32), occurred between the hours of 4:00 am and 8:00 am and 50% (16 of 32), occurred between the hours of 10:00 am and 8:00 pm.

In addition to these three collisions types there were 40 police-reported accidents, which involved heavy trucks. With a rate of 26 acc/100 mvm, this calculated to be significantly higher than the statewide average. Of the total heavy truck related accidents, 62% (25 of 40), occurred at intersections. The top three intersection with heavy truck related accidents were: MD 140 at Malcolm Drive (5 occurrences), MD 140 at Old Baltimore Road & Market Street (4 occurrences), and MD 140 at Englar Road (4 occurrences). Rear end collisions make up 60% (24 of 40), of the total heavy truck related accidents - occurring mostly are the following three locations: MD 140 at Old Baltimore Road & Market Street (4 occurrences), MD 140 at Malcolm Drive (4 occurrences), and MD 140 at Center Street (3 occurrences). Wet surface conditions, were not a major factor, as notated in 20% (8 of 40) of the total truck related accidents. Again, we see a fall and rise in the accident frequency where year 2003 experienced 15 accidents, year 2004 experienced 9 accidents, and year 2005 experienced 16 accidents. Of the 40 heavy truck related accidents, 70% (28 of 40), occurred between the hours of 7:00 am and 3:00 pm.

Candidate Safety Improvement Locations (formerly High Accident Locations)

There has been no Priority Candidate Safety Improvement Intersection or Priority Candidate Safety Improvement Sections during the study period.

Summary

Although average daily traffic volumes have increased from approximately 47,700 to 53,100 total accident frequency has remained constant and its severity was not significantly higher then the statewide average rate. Three collision types stand out with the largest number of occurrences within their category - they are: rear ends, angles, and fixed object collisions. Rear end collisions were the only accident type calculated to be significantly higher than the statewide average. All other categories were comparable to their respective statewide averages. Most of the accidents were found to be occurring during regular daytime hours at several specific intersections. While not site specific, the majority of the fixed object collisions occurred in a similar time of day pattern. Angle collisions were more concentrated during the lunchtime hours, occurring within a 3-hour time block. Heavy truck related accidents calculate to be significantly higher than the statewide average with rear end collisions being reported as the most prominent collision type in this vehicle category. Most of these accidents were found to be concentrated within the vicinity of three locations: MD 140 at Malcolm Drive, MD 140 at Old Baltimore Road & Market Street, and MD 140 at Englar Road. Of the two fatal accidents reported on MD 140, both occurred within blocks of the Town Mall of Westminster involving pedestrians.

Maryland State Highway Administration
Office of Traffic and Safety - Traffic Development and Support Division
SHA 32.1 ADC Study Worksheet Output rev: 06/2006-1

Name: Robert Booker, Jr.
Date: 12/22/2006

Location: MD 140 From LEIDY RD To SULLIVAN RD
County: Carroll Period: January 1, 2003 To December 31, 2005
Type Controls: SU-1004

Logmile: From 007.16 To 010.04 Length: 2.88
Note(s):
* Significantly Higher than Statewide

YEAR ▸	2003	2004	2005	TOTAL	STUDYRATE	STWDRATE
FATAL	1	1		2	1.3	1.6
No. KILLED	1	1		2		
INJURY	48	56	54	158	100.8	112.4
No. INJURED	89	93	91	273		
PROP DAMAGE	66	56	64	186	118.8	134.0
TOTAL ACC	115	113	118	346	220.6	247.9
RATE	229.1	222.1	211.6			
MADT	47700	48300	53100			
VMT(millions)	50.2	50.9	55.8	156.9		
OPPOSITE DIR		4	5	9	5.7	4.3
REAR END	60	71	62	193	123.1 *	91.8
SIDESWIPE	5	7	9	21	13.4	17.6
LEFT TURN	10	2	4	16	10.2	27.2
ANGLE	11	10	16	37	23.6	38.1
PEDESTRIAN	2	2		4	2.6	7.7
PARKED VEH		2	1	3	1.9	4.2
FIXED OBJECT	13	7	12	32	20.4	22.6
OTHER	14	8	9	31	19.8	30.3
U-TURN			1	1		
BACKING	1	1		2		
ANIMAL	1		1	2		
RAILROAD						
EXPL./FIRE		1		1		
OVERTURN		1	1	2		
OTHER/UNK	12	5	6	23		
TRCK REL ACC	15	9	16	40	25.5 *	16.4
NIGHTTIME	22	22	26	70	20 %	32 %
WET SURFACE	39	23	21	83	24 %	28 %
ALCOHOL REL	3	9		12	3 %	8 %
INTERSEC REL	62	80	61	183		
TOTAL VEH	241	249	255	745		
TOTAL TRUCKS	15	9	16	40		
PERCENT TRKS	6.2	3.6	6.3	5.4		

Comments:
AADT's attained from the Maryland Highway Location Reference Manual.

Maryland State Highway Administration
Office of Traffic and Safety - Traffic Development and Support Division
SHA 52.1 ADC Combined Summary Output rev. 06/2006-1

Name: Robert Booker, Jr.
Date: 12/22/2006

Location: MD 140 From LEIDY RD To SULLIVAN RD
County: Carroll
Period: January 1, 2003 To December 31, 2005

Logmile: From 007.16 To 010.04 Length: 2.88
Note(s):

SEVERITY	Fatal	Injury	P-Damage	Total
Accidents	2	158	186	346
Veh Occ		269		
Pedestrian	2	4		

DAY OF THE WEEK							
SUN	MON	TUE	WED	THU	FRI	SAT	UNK
23	53	54	59	50	66	41	

MONTH OF THE YEAR												
JAN	FEB	MAR	APR	MAY	JUN	JUL	AUG	SEP	OCT	NOV	DEC	UNK
30	28	20	19	26	18	32	31	30	31	27	44	

CONDITION:	DRIVER	PED
Normal:	274	5
ALCOHOL:	11	1
Other:	61	

TIME	12	01	02	03	04	05	06	07	08	09	10	11	UNK
AM:	2	1	1	1	5	7	13	17	22	17	22	13	
PM:	28	27	27	26	23	32	16	13	11	8	10	4	

VEHICLES INVOLVED PER ACCIDENT							
1	2	3	4	5	6+	UNK	TOTAL
44	227	57	14	4			745

VEHICLE TYPE			
5	M_Cycle/Moped	22	Trk_Trailer
339	Passenger Veh	2	Passenger Bus
159	Light Truck	4	School Bus
20	Heavy Truck	4	Emergency Veh
190	Other Types		

SURFACE	
82	WET
252	DRY
12	SNO/ICE
	MUD
	OTHER

MOVEMENTS												
NORTH			SOUTH			EAST			WEST		
LF	ST	RT	LF	ST	RT	LF	ST	RT	LF	ST	RT
18	232	4	12	137	3	4	76	2	7	129	

OTHER MOVEMENTS 121

PROBABLE CAUSES			
1	Inf. of Drugs		Improper Parking
7	Inf. of Alcohol	3	Passenger Interfere/Obstr.
1	Inf. of Medication		Illegally in Roadway
1	Inf. of Combined Substance		Bicycle Violation
3	Physical/Mental Difficulty	1	Clothing not Visible
6	Fell Asleep/Fainted etc.	1	Smog, Smoke
109	Fail to give full attent.		Sleet, Hail, Frz. Rain
	Lic. Restr. Non-comply		Blowing Sand, Soil, Dirt
18	Fail to Yield Rightofway	1	Severe Crosswinds
	Fail to Obey Stop Sign	4	Rain, Snow
34	Fail to Obey Traffic Sig	2	Animal
2	Fail to Obey Other Contr.	1	Vision Obstruction
	Fail to Keep Right of Ctr	4	Vehicle Defect
	Fail to Stop for Sch. Bus	4	Wet
	Wrong Way on One Way	3	Icy or Snow Covered
	Exceeded Speed Limit	2	Debris or Obstruction
46	Too Fast for Conditions		Ruts, Holes, Bumps
32	Followed too Closely	1	Road Under Construction
4	Improper Turn	1	Traffic Cntrl Device Inop.
13	Improper Lane Change		Shoulders Low, Soft, High
3	Improper Backing		
1	Improper Passing	37	Other or Unknown
	Improper Signal		

WEATHER		ILLUMINATION		TOTALS	
272	CLEAR/CLDY	253	DAY		
6	FOGGY	18	DAWN/DUSK		
57	RAINING	56	DARK - LIGHTS ON	2003	115
9	SNOW/SLEET	14	DARK - NO LIGHTS	2004	113
2	OTHER		OTHER	2005	118

COLLISION TYPES			FAT	INJ	PROP	TOTAL
OPPOSITE DIR	RELATED:			5	3	8
	UNRELATED:			1		1
REAR END	RELATED:			55	45	100
	UNRELATED:			61	32	93
SIDESWIPE	RELATED:			1	8	9
	UNRELATED:			6	6	12
LEFT TURN	RELATED:			7	8	15
	UNRELATED:			1		1
ANGLE	RELATED:			20	13	33
	UNRELATED:			3	1	4
PEDESTRIAN	RELATED:			1		1
	UNRELATED:		2	1		3
PARKED VEH.	RELATED:					
	UNRELATED:			2	1	3
OTHER CT	RELATED:			2	10	12
	UNRELATED:			4	15	19
F	BRIDGE	01			3	3
I	BUILDING	02				
X	CULVERT/DITCH	03				
E	CURB	04		1	13	14
D	GUARDRAIL/BARRIER	05		3	2	5
	EMBANKMENT	06		1		1
O	FENCE	07				
S	LIGHT POLE	08		2	1	3
J	SIGN POST	09			4	4
E	OTHER POLE	10		1		1
C	TREE/SHRUBBERY	11				
T	CONCTE. BARRIER	12				
S	CRASH ATTENUATOR	13				
	OTHER FIXED OBJECT				1	1

SHA State Highway Administration — Maryland Department of Transportation

Office of Traffic & Safety
Traffic Development & Support Division
Crash Analysis Safety Team

Location: MD 140 ~ LEIDY RD - SULLIVAN RD (2003)
County: CARROLL
Study Period: 01/01/2003 to 12/31/2003
Analyst: Robert L. Booker, Jr. **Date:** 12/22/2006

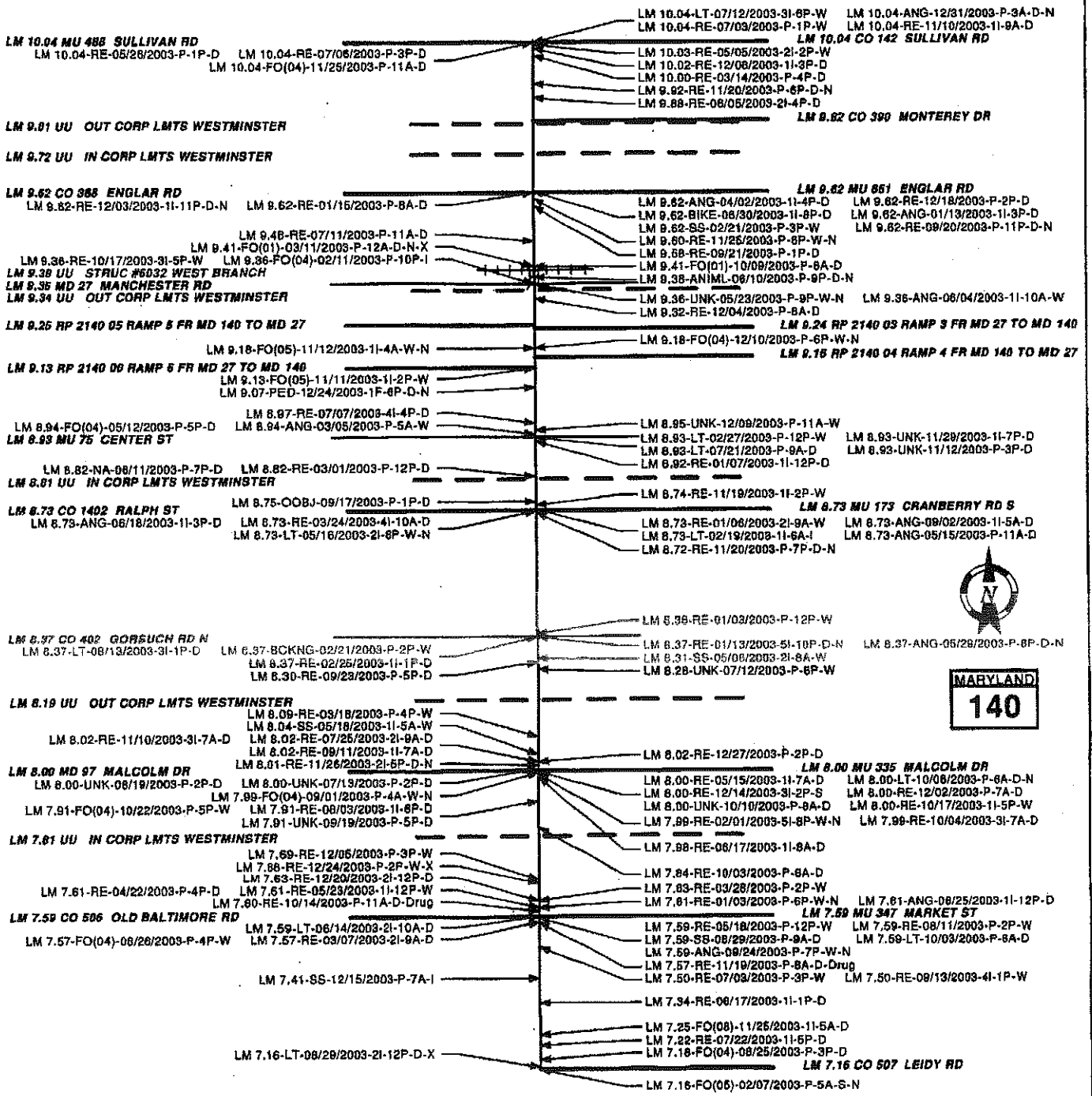

KEY:LogMile-Collision Type (FixedObjectStruck) -Date-Severity-Time-Surface-Illumination-Alcohol

template 06-27-06

F - Fatalities	SS - Sideswipe	FO - Fixed Object	OFFRD - Off Road
I - Injury	PARKD - Parked Vehicle	OOBJ - Other Object	RUNWY - Downhill Runaway
P - Property Damage	PED - Pedestrian	OT - Overturn	FIRE - Explosion Fire
OD - Opposite Direction	BIKE - Bicycle	SPILL - Spilled Cargo	BCKNG - Backing
LT - Left Turn	PEDAL - Other Pedalcycle	JCKKNF - Jackknife	UTURN - U-Turn
RE - Rear End	CONVY - Other Conveyance	SPRTD - Units Separated	OTHR - Other
ANG - Angle	ANIML - Animal	NCOLL - Other Non Collision	UNK - Unknown

00 - Not Applicable	08 - Light Support Pole	N - Night
01 - Bridge or Overpass	09 - Sign Support Pole	X - Alcohol
02 - Building	10 - Other Pole	D - Dry Surface
03 - Culvert or Ditch	11 - Tree Shrubbery	W - Wet Surface
04 - Curb	12 - Construction Barrier	I - Icy Surface
05 - Guardrail or Barrier	13 - Crash Attenuator	S - Snowy Surface
06 - Embankment	98 - Other	
07 - Fence	99 - Unknown	

SHA State Highway Administration

Office of Traffic & Safety
Traffic Development & Support Division
Crash Analysis Safety Team

Location: MD 140 ~ LEIDY RD - SULLIVAN RD (2004)
County: CARROLL
Study Period: 01/01/2004 to 12/31/2004
Analyst: Robert L. Booker, Jr. **Date:** 12/22/2006

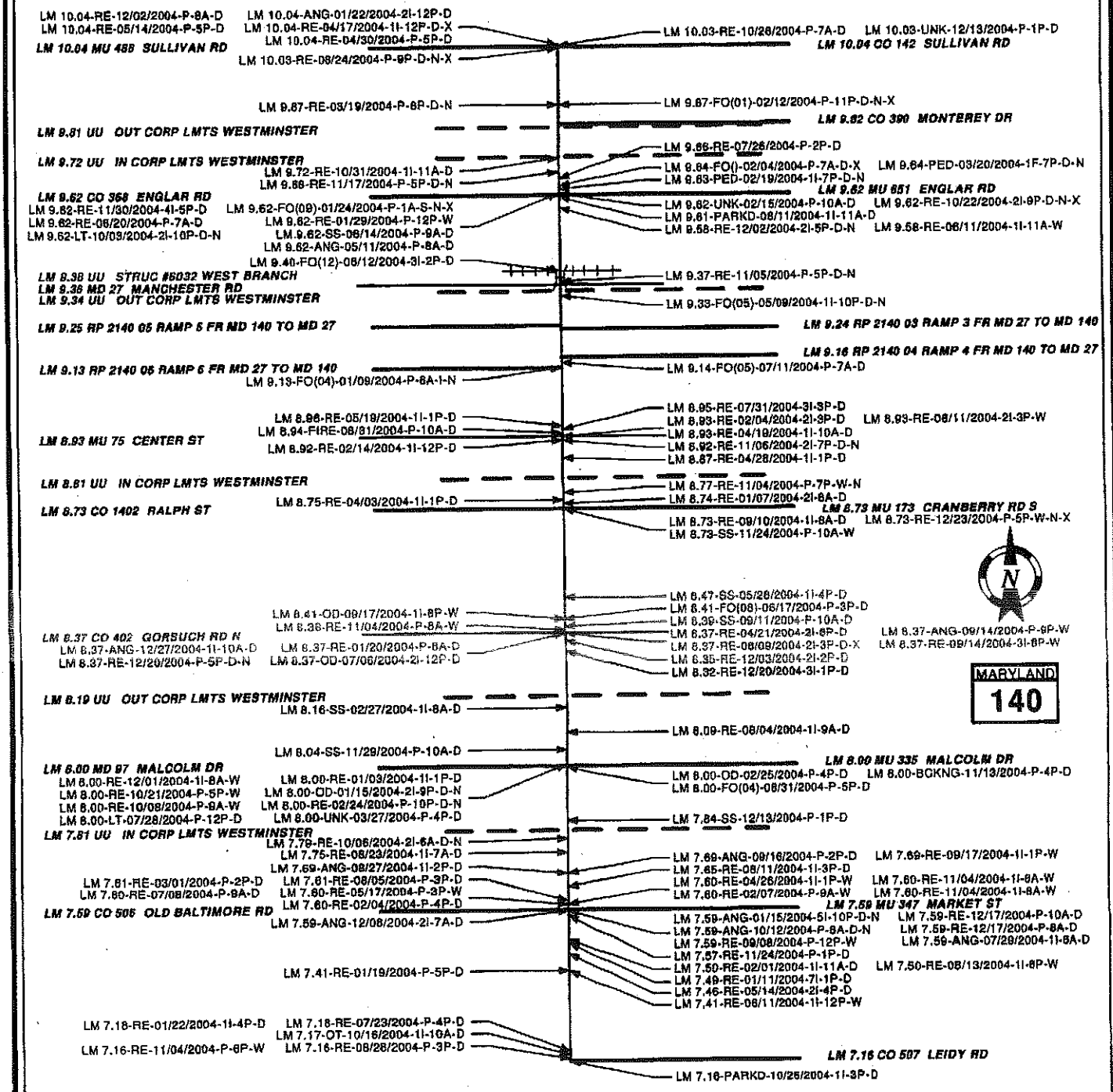

KEY:LogMile-Collision Type (FixedObjectStruck) -Date-Severity-Time-Surface-Illumination-Alcohol

template 08-27-05

F - Fatalities	SS - Sideswipe	FO - Fixed Object	OFFRD - Off Road
I - Injury	PARKD - Parked Vehicle	OOBJ - Other Object	RUNWY - Downhill Runaway
P - Property Damage	PED - Pedestrian	OT - Overturn	FIRE - Explosion Fire
OD - Opposite Direction	BIKE - Bicycle	SPILL - Spilled Cargo	BCKNG - Backing
LT - Left Turn	PEDAL - Other Pedalcycle	JCKKNF - Jackknife	UTURN - U-Turn
RE - Rear End	CONVY - Other Conveyance	SPRTD - Units Seperated	OTHR - Other
ANG - Angle	ANIML - Animal	NCOLL - Other Non Collision	UNK - Unknown

00 - Not Applicable	08 - Light Support Pole	N - Night	
01 - Bridge or Overpass	09 - Sign Support Pole	X - Alcohol	
02 - Building	10 - Other Pole	D - Dry Surface	
03 - Culvert or Ditch	11 - Tree Shrubbery	W - Wet Surface	
04 - Curb	12 - Construction Barrier	I - Icy Surface	
05 - Guardrail or Barrier	13 - Crash Attenuator	S - Snowy Surface	
06 - Embankment	88 - Other		
07 - Fence	99 - Unknown		

SHA State Highway Administration

Office of Traffic & Safety
Traffic Development & Support Division
Crash Analysis Safety Team

Location: MD 140 ~ LEIDY RD - SULLIVAN RD (2005)
County: CARROLL
Study Period: 01/01/2005 to 12/31/2005
Analyst: Robert L. Booker, Jr. **Date:** 12/22/2006

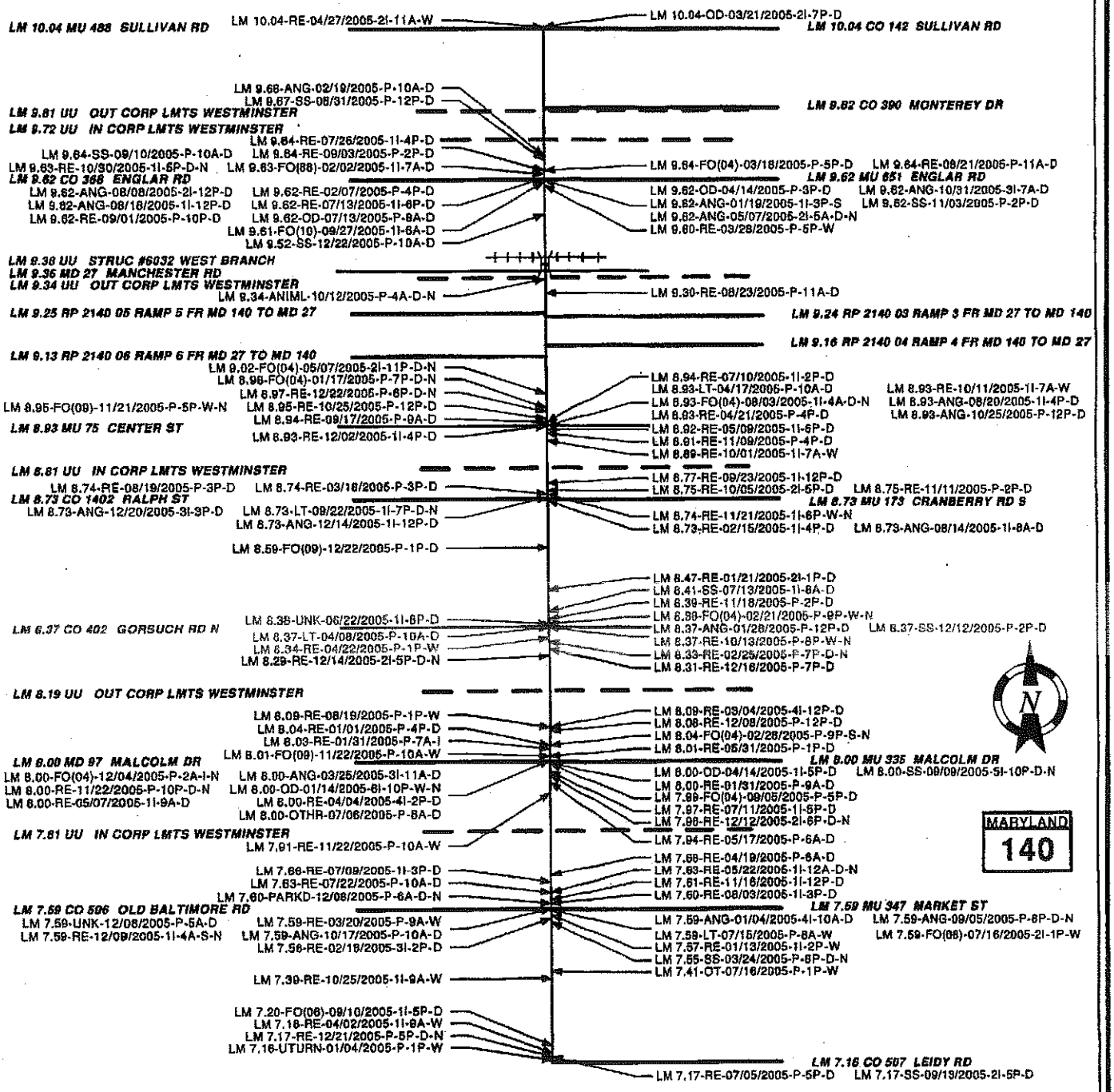

KEY:LogMile-Collision Type (FixedObjectStruck) -Date-Severity-Time-Surface-Illumination-Alcohol

Template 05-27-06

F - Fatalities	SS - Sideswipe	FO - Fixed Object	OFFRD - Off Road
I - Injury	PARKD - Parked Vehicle	OOBJ - Other Object	RUNWY - Downhill Runaway
P - Property Damage	PED - Pedestrian	OT - Overturn	FIRE - Explosion Fire
OD - Opposite Direction	BIKE - Bicycle	SPILL - Spilled Cargo	BCKNG - Backing
LT - Left Turn	PEDAL - Other Pedalcycle	JCKKNF - Jackknife	UTURN - U-Turn
RE - Rear End	CONVY - Other Conveyance	SPRTD - Units Separated	OTHR - Other
ANG - Angle	ANIML - Animal	NCOLL - Other Non Collision	UNK - Unknown

00 - Not Applicable	06 - Light Support Pole
01 - Bridge or Overpass	09 - Sign Support Pole
02 - Building	10 - Other Pole
03 - Culvert or Ditch	11 - Tree Shrubbery
04 - Curb	12 - Construction Barrier
05 - Guardrail or Barrier	13 - Crash Attenuator
06 - Embankment	88 - Other
07 - Fence	99 - Unknown
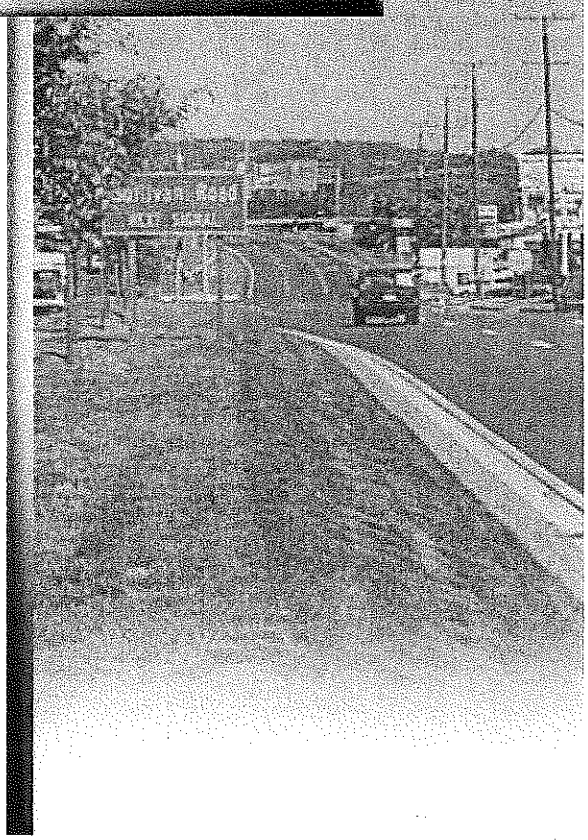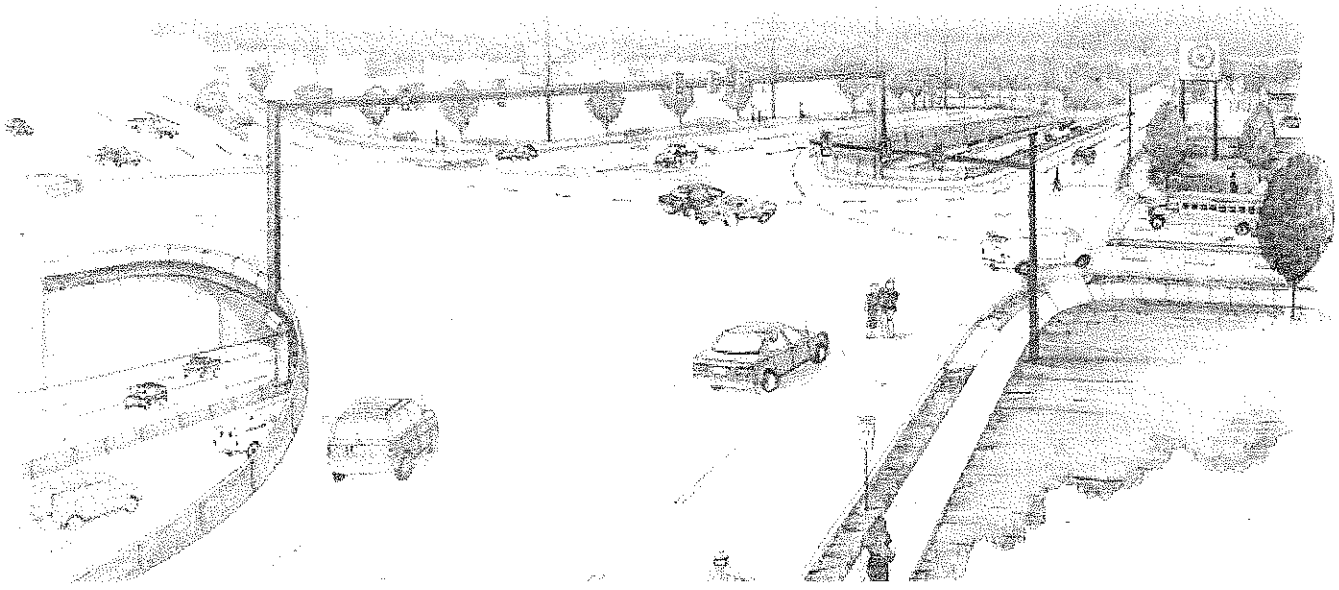
N - Night	
X - Alcohol	
D - Dry Surface	
W - Wet Surface	
I - Icy Surface	
S - Snowy Surface