DRILL HOLES

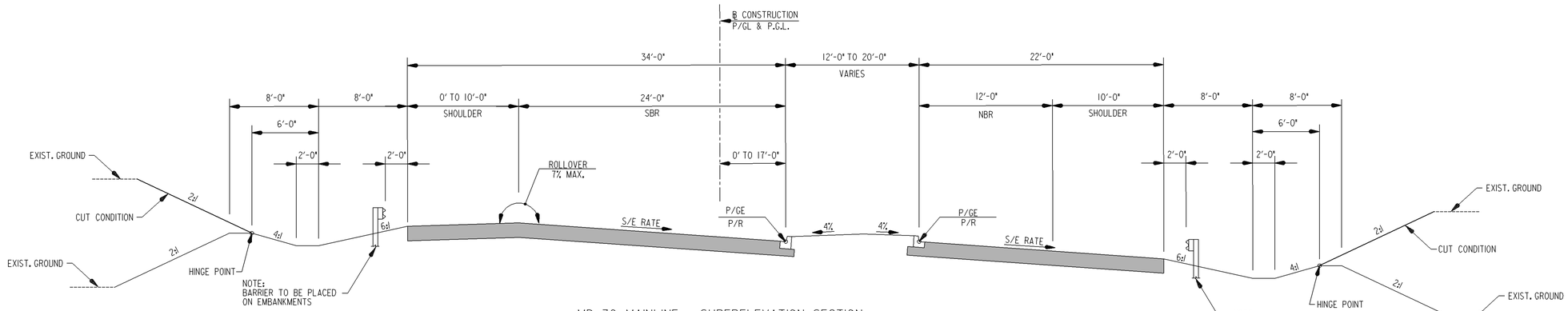

MD 30 MAINLINE - SUPERELEVATION SECTION
STA 526+05± TO STA 540+77±

DRILL HOLES

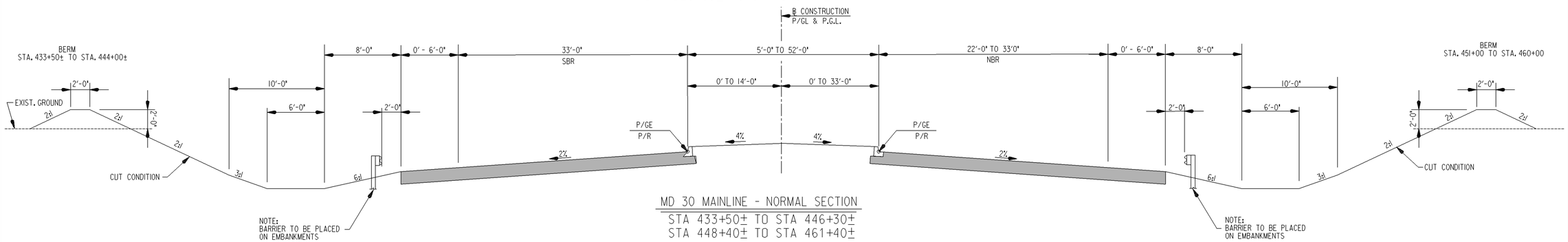

MD 30 MAINLINE - NORMAL SECTION
STA 433+50± TO STA 446+30±
STA 448+40± TO STA 461+40±

DRILL HOLES

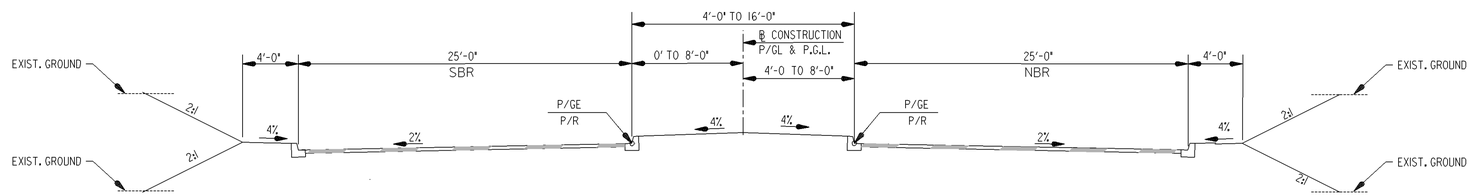

MD 30 MAINLINE - NORMAL SECTION
STA 8+15± TO STA 8+84±
STA 12+56± TO STA 16+32±

DRILL HOLES

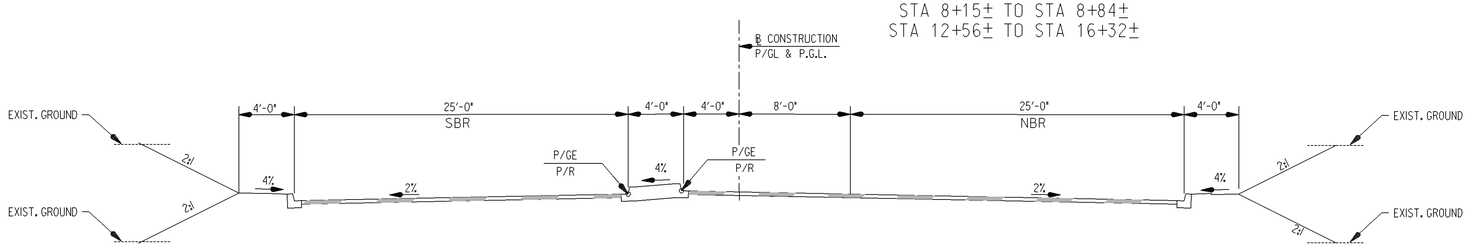

MD 30 MAINLINE - NORMAL SECTION
STA 8+84± TO STA 12+56±

Maryland Department of Transportation
State Highway Administration

Office of Highway Development

FULL DEPTH

RESURFACING

SCALE : 1 IN. = 5 FT.

WALLACE, MONTGOMERY & ASSOCIATES, LLP
CIVIL AND STRUCTURAL ENGINEERS
110 West Road
Suite 300
Towson, Maryland 21204

REVISIONS	TYPICAL SECTIONS	TS-04 OF 9

STATE OF MARYLAND
Maryland Department of Transportation
State Highway Administration
Highway Design Division
MD 30 RELOCATED
FROM SOUTH OF WOLF HILL DRIVE TO NORTH OF HAMPSTEAD

CONT. NO. CL4165370 F.A.P. NO. SEE TITLE SHEET SHEET NO. ____ OF ____
PREL. TRAC. BY HDD FINAL TRAC. BY HDD

m:\proj\202007.05_pw_\exported\ts04md30.dgn
Wednesday, May 25, 2005 AT 02:05 PM