DRILL HOLES

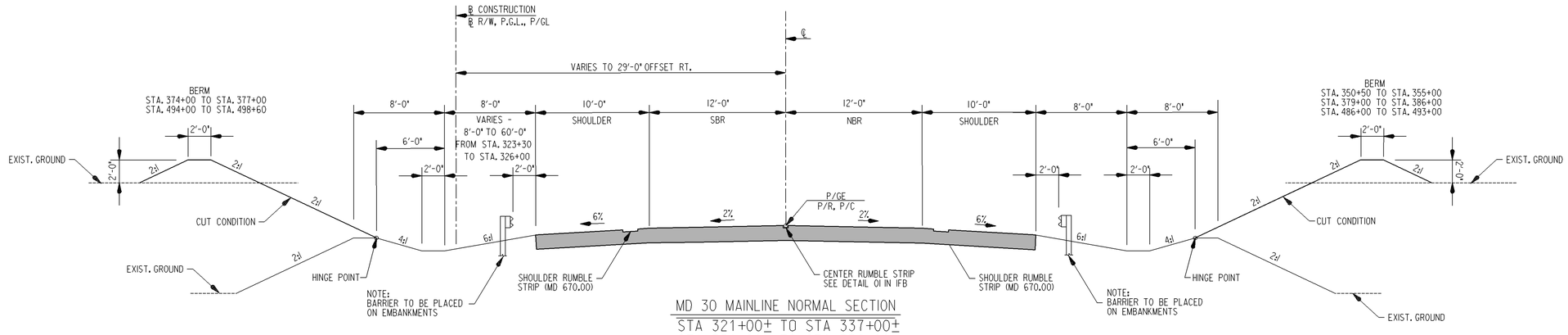

MD 30 MAINLINE NORMAL SECTION

STA 321+00± TO STA 337+00±
STA 351+20± TO STA 356+00±
STA 374+00± TO STA 387+00±
STA 410+00± TO STA 433+50±
STA 483+25± TO STA 498+60±
STA 513+60± TO STA 526+05±

DRILL HOLES

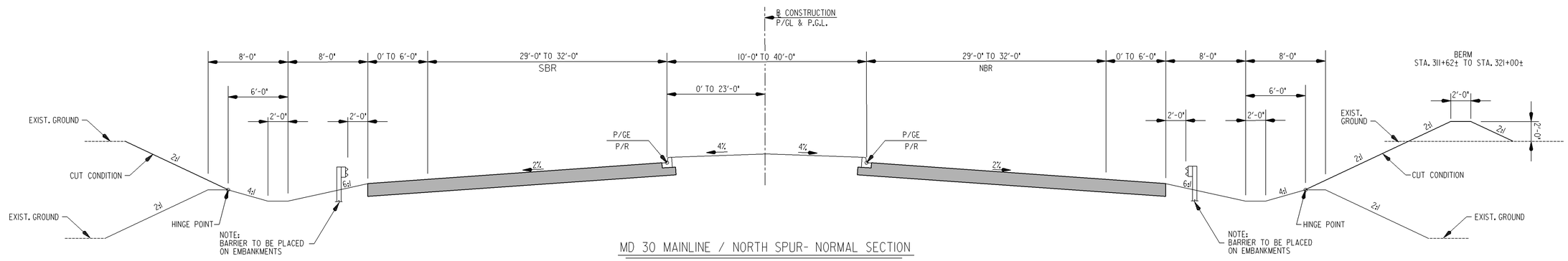

MD 30 MAINLINE / NORTH SPUR- NORMAL SECTION

STA 1+05± TO STA 2+50±
STA 307+50± TO STA 309+38±
STA 314+21± TO STA 321+00±

DRILL HOLES

Maryland Department of Transportation
State Highway Administration

Office of Highway Development

FULL DEPTH

SCALE : 1 IN. = 5 FT.

WALLACE, MONTGOMERY & ASSOCIATES, LLP
CIVIL AND STRUCTURAL ENGINEERS
110 West Road
Suite 300
Towson, Maryland 21204

REVISIONS

TYPICAL SECTIONS | **TS-02 OF 9**

STATE OF MARYLAND
Maryland Department of Transportation
State Highway Administration
Highway Design Division
MD 30 RELOCATED
FROM SOUTH OF WOLF HILL DRIVE TO NORTH OF HAMPSTEAD

CONT. NO. CL4165370 F.A.P. NO. SEE TITLE SHEET SHEET NO. ____ OF ____
PREL. TRAC. BY HDD FINAL TRAC. BY HDD

m:\proj\202007.05_pw_\exported\ts02md30.dgn
Wednesday, May 25, 2005 AT 02:05 PM