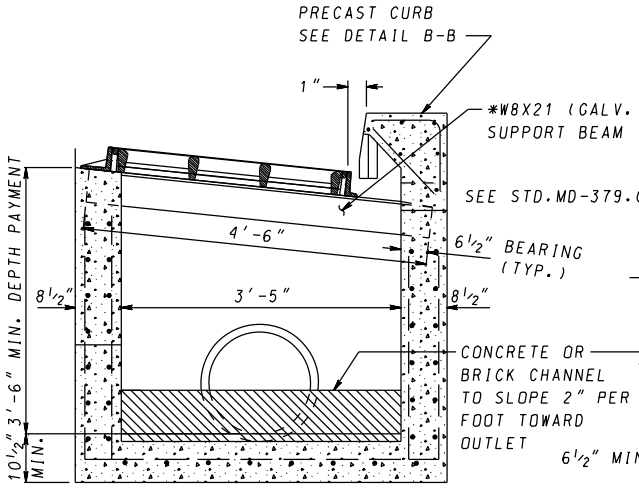

SECTION B–B

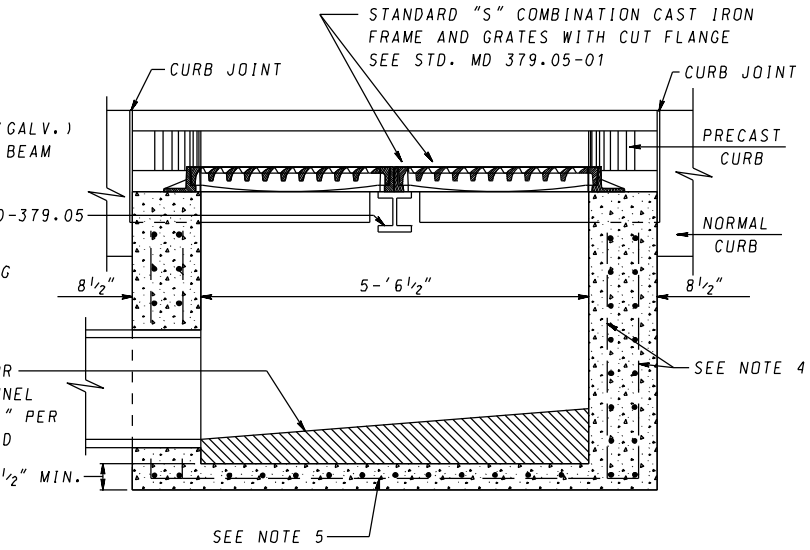

INVERT MAY BE PLAIN CONCRETE OR 4" BRICK LAID ON EDGE.

SECTION A–A

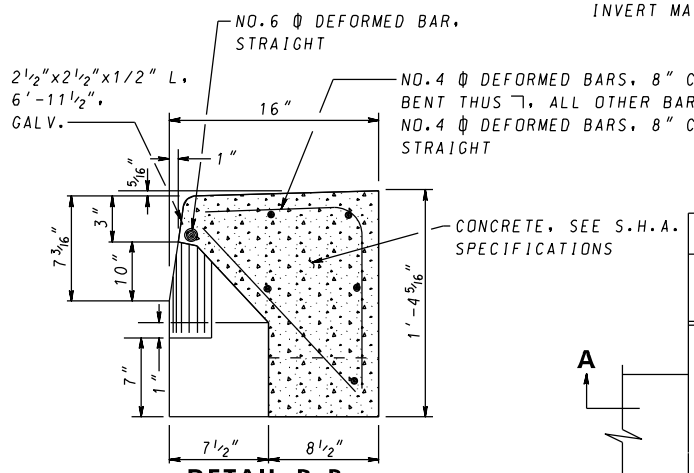

DETAIL B–B
PRECAST CURB

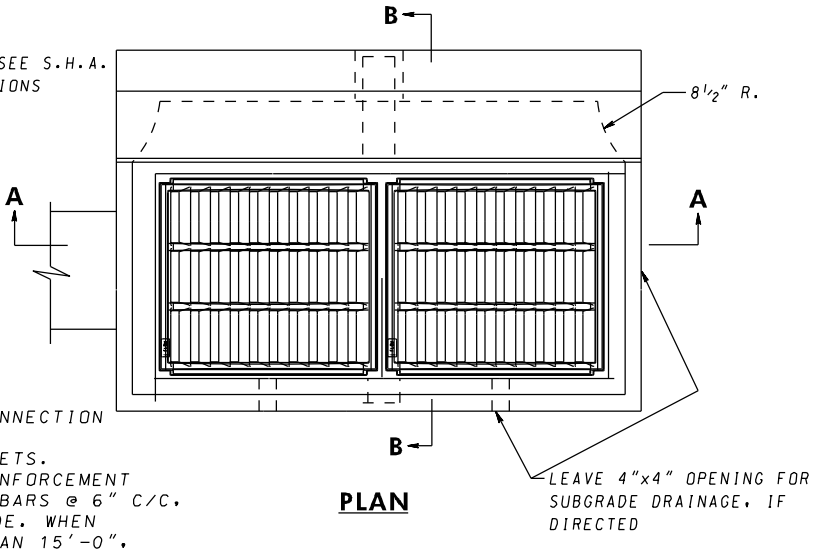

PLAN

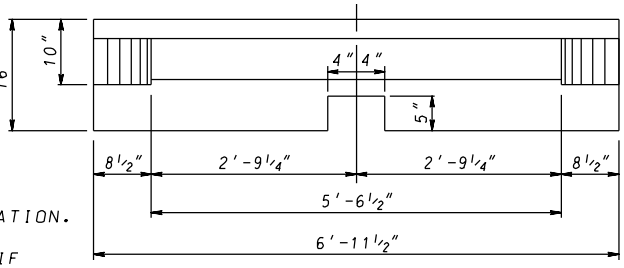

ELEVATION
PRECAST CURB

GENERAL NOTES

1. CONCRETE TO BE MIX NO. 2 (3,000 PSI).
2. SIZE, TYPE, AND DIRECTION OF INLET CONNECTION WILL VARY TO SUIT CONDITIONS.
3. SEE SHA LATEST SPECIFICATIONS FOR INLETS.
4. WHEN "A" IS LESS THAN 7'-0", WALL REINFORCEMENT SHALL BE ONE LAYER OF NO. 4 DEFORMED BARS @ 6" C/C, TWO WAYS, AND HAVE 3 1/2" COVER ON INSIDE. WHEN "A" IS GREATER THAN 7'-0" AND LESS THAN 15'-0", WALL REINFORCEMENT TO BE TWO LAYERS OF NO. 4 DEFORMED BARS @ 6" C/C, TWO WAYS , ON INSIDE AND OUTSIDE OF WALL WITH 2" COVER.
5. BASE REINFORCEMENT SHALL BE ONE LAYER OF NO. 4 DEFORMED BARS @ 6" C/C , TWO WAYS, WITH 2" COVER FROM TOP OF BASE.
6. PLACE 1/4" EXPANSION MATERIAL OF THE SAME TYPE APPROVED FOR PAYMENT IN BETWEEN THE FRAME AND ABUTTING RIGID PAVEMENT AND BETWEEN ENDS OF INLET CURB AND NORMAL CURB.
7. BRICK FOR MASONRY TO COMPLY WITH THE SHA SPECIFICATION.
8. FOR UNDEPRESSED INLETS USE NORMAL PAVEMENT SLOPE.
9. FOR METHOD OF ANCHORING BEAM, SEE STD. MD 380.01 IF INLET IS CONSTRUCTED OF BRICK. (FOR INLET REPAIR ONLY).
10. FROM THE CURB LINE, INLET HAS BEEN DESIGNED FOR HS-25 LOADING, ACCORDING TO AASHTO LRFD BRIDGE DESIGN SPECIFICATIONS AND FOR A MAXIMUM DEPTH OF 15'-0".

SPECIFICATION 305	CATEGORY CODE ITEMS
APPROVED	DIRECTOR – OFFICE OF HIGHWAY DEVELOPMENT

APPROVAL • SHA REVISIONS		APPROVAL • FEDERAL HIGHWAY ADMINISTRATION	
APPROVAL	10-30-69	APPROVAL	11-10-69
REVISED	8-3-10	REVISED	7-26-10
REVISED	10-7-14	REVISED	9-29-14
REVISED	–	REVISED	–

State Highway Administration

Maryland Department of Transportation
STATE HIGHWAY ADMINISTRATION

STANDARDS FOR HIGHWAYS AND INCIDENTAL STRUCTURES

STANDARD TYPE S COMBINATION INLET DOUBLE GRATE TANDEM

STANDARD NO. MD 379.04