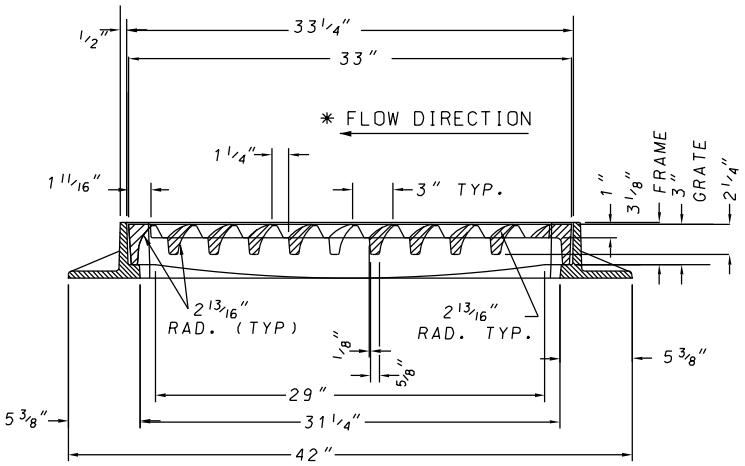

SECTION A-A

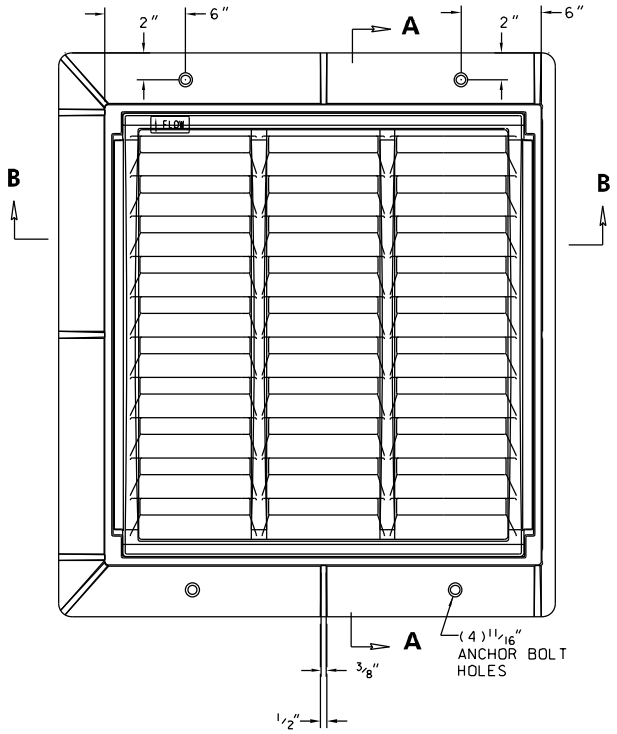

PLAN

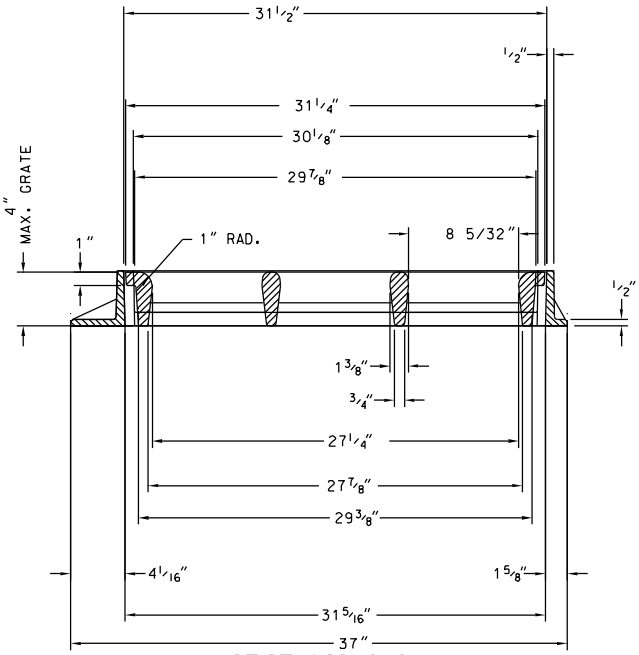

SECTION B-B

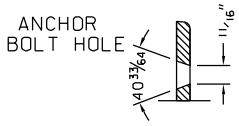

NOTES:

MATERIAL: CAST GRAY IRON ASTM A-48, CLASS 35B
FINISH: NO PAINT
WEIGHT (Min.): FRAME 163#, GRATE 295#

FRAMES TO BE CASTING WITH FLANGE CUT, AS SHOWN, WHEN INLET TO BE PLACED ADJACENT TO CURB OPENING FOR FULL FLANGE/DETAILS, REFER TO THE RESPECTIVE STANDARD PLATES FOR TYPE "S" INLET.

* CONTRACTOR IS RESPONSIBLE FOR CORRECT ORIENTATION OF THE CV-GRATE TOWARD THE DIRECTION OF FLOW.

NOTE: MANUFACTURER TO VERIFY THAT FRAME IS DESIGNED FOR HS-25 LOADING

SPECIFICATION 305		
APPROVED	DIRECTOR – OFFICE OF HIGHWAY DEVELOPMENT	
	APPROVAL • SHA REVISIONS	APPROVAL • FEDERAL HIGHWAY ADMINISTRATION
	APPROVAL 2-10-04	APPROVAL 3-31-04
	REVISED 7-1-09	REVISED 7-27-09
	REVISED 10-7-14	REVISED 9-29-14
	REVISED	REVISED

State Highway Administration

Maryland Department of Transportation
STATE HIGHWAY ADMINISTRATION

STANDARDS FOR HIGHWAYS AND INCIDENTAL STRUCTURES

CURVE VANE GRATE WITH FRAME FOR SINGLE TYPE S INLET (S-CV)

STANDARD NO. MD 379.02-01