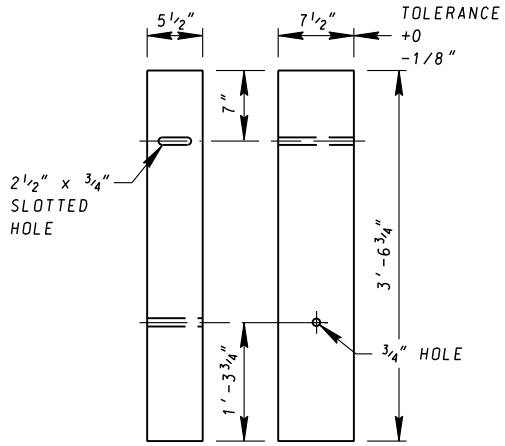

SHORT WOODEN POST

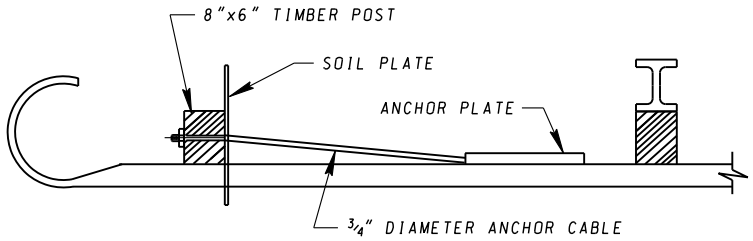

PLAN

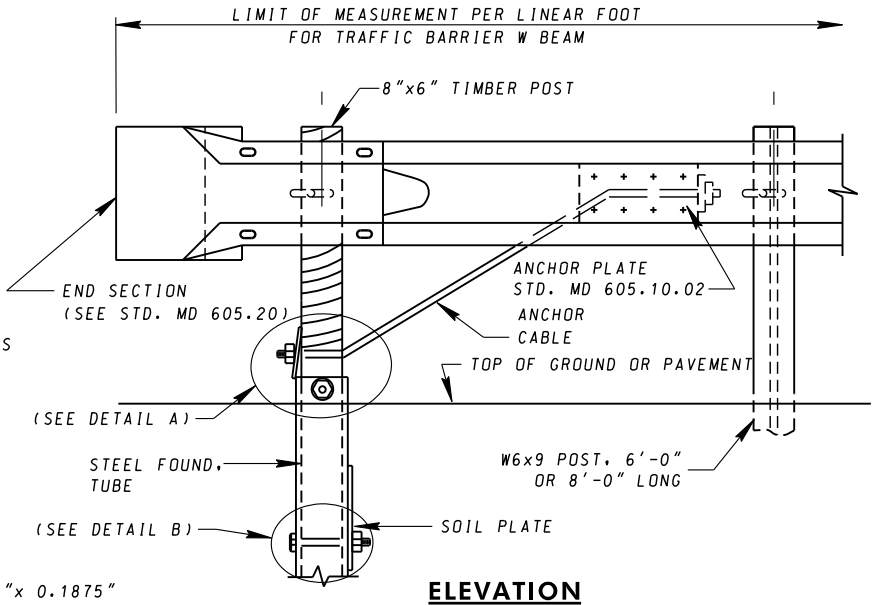

ELEVATION

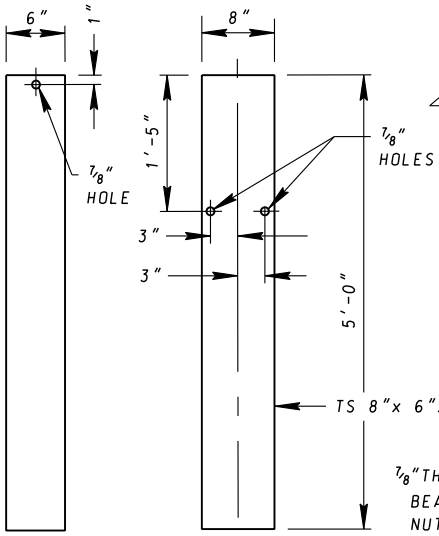

FRONT **SIDE**

STEEL FOUNDATION TUBE

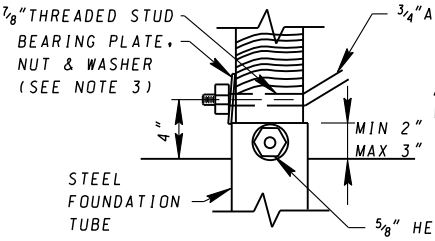

DETAIL A

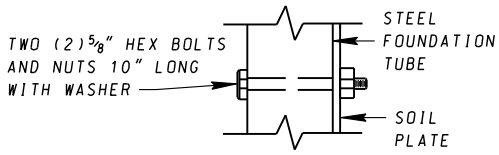

DETAIL B

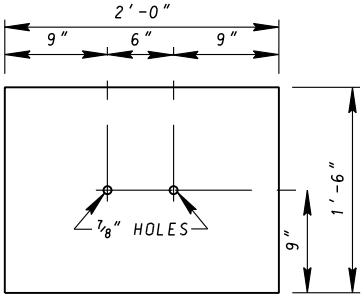

SOIL PLATE
(1/4" THICK)

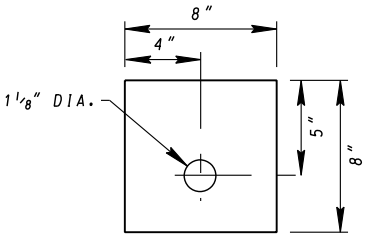

BEARING PLATE
(5/8" THICK)

OPTION 2 (SHOWN ABOVE)
(FOUNDATION TUBE WITH SOIL PLATE)

OPTION 3 (NOT SHOWN)
(FOUNDATION TUBE WITHOUT SOIL PLATE)
(SAME AS OPTION 2 EXCEPT STEEL FOUNDATION TUBE IS 6 1/2' LONG)

NOTES

1. NOTES ON STD. MD 605.10 APPLY TO OPTION 2 & 3.
2. IF THE FOUNDATION TUBE AND SOIL PLATE (OPTION 2) ARE DRIVEN INTO THE SOIL, PROPER CARE SHOULD BE TAKEN TO ENSURE THAT THE SOIL PLATE FASTENERS ARE NOT BROKEN DURING THE DRIVING PROCESS.
3. SECURE BEARING PLATE WITH 16 PENNY GALVANIZED NAIL TO PREVENT ROTATION OF PLATE.
4. SAME AS MD 605.01 NOTE 6

SPECIFICATION 605	CATEGORY CODE ITEMS		
APPROVED	DIRECTOR – OFFICE OF HIGHWAY DEVELOPMENT		
	APPROVAL • SHA REVISIONS	APPROVAL • FEDERAL HIGHWAY ADMINISTRATION	
	APPROVAL 11-10-99	APPROVAL 7-2-99	
	REVISED 4-17-06	REVISED 4-5-06	
	REVISED	REVISED	
	REVISED	REVISED	

Maryland Department of Transportation
STATE HIGHWAY ADMINISTRATION
STANDARDS FOR HIGHWAYS AND INCIDENTAL STRUCTURES

TYPE K TRAFFIC BARRIER END TREATMENT
OPTION 2 & 3 ANCHORAGE

STANDARD NO. MD 605.10-01