NOTE:
MD 528 IS ASSUMED TO RUN IN A NORTH-SOUTH DIRECTION.

CONSTRUCTION DETAILS

A. REMOVE EXISTING TRAFFIC SIGNAL HEAD AND INSTALL PROPOSED TRAFFIC SIGNAL HEAD - MAST ARM MOUNTED (USE EXISTING 7-CONDUCTOR ELECTRICAL CABLE)

B. USE EXISTING TRAFFIC SIGNAL CABINET AND CONTROLLER

EQUIPMENT LIST 'A'

EQUIPMENT FURNISHED AND INSTALLED BY SHA SHOP FORCES.

900000	8 INCH VEHICULAR TRAFFIC SIGNAL HEAD SECTION	3	EACH
900000	12 INCH VEHICULAR TRAFFIC SIGNAL HEAD SECTION	7	EACH

EXISTING SIGNS

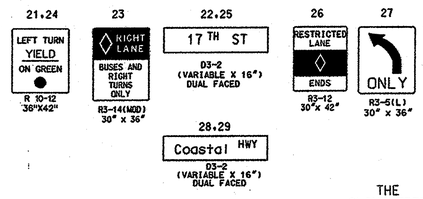

EXISTING SIGNALS
(BLACK FACED)

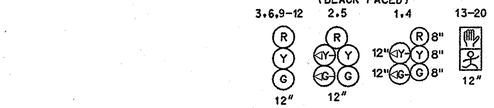

PROPOSED SIGNALS
(BLACK FACED)

NEMA PHASING

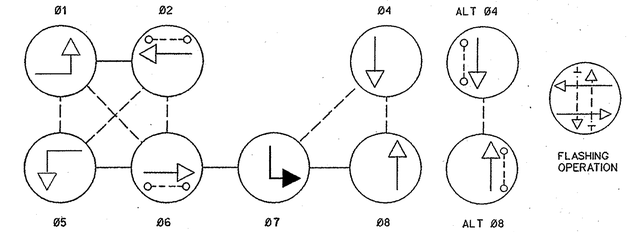

PHASING NOTES:
1. PHASES ASSOCIATED BY A SOLID LINE WILL NOT OPERATE CONCURRENTLY.
2. PHASES ASSOCIATED BY A DASHED LINE WILL OPERATE CONCURRENTLY.

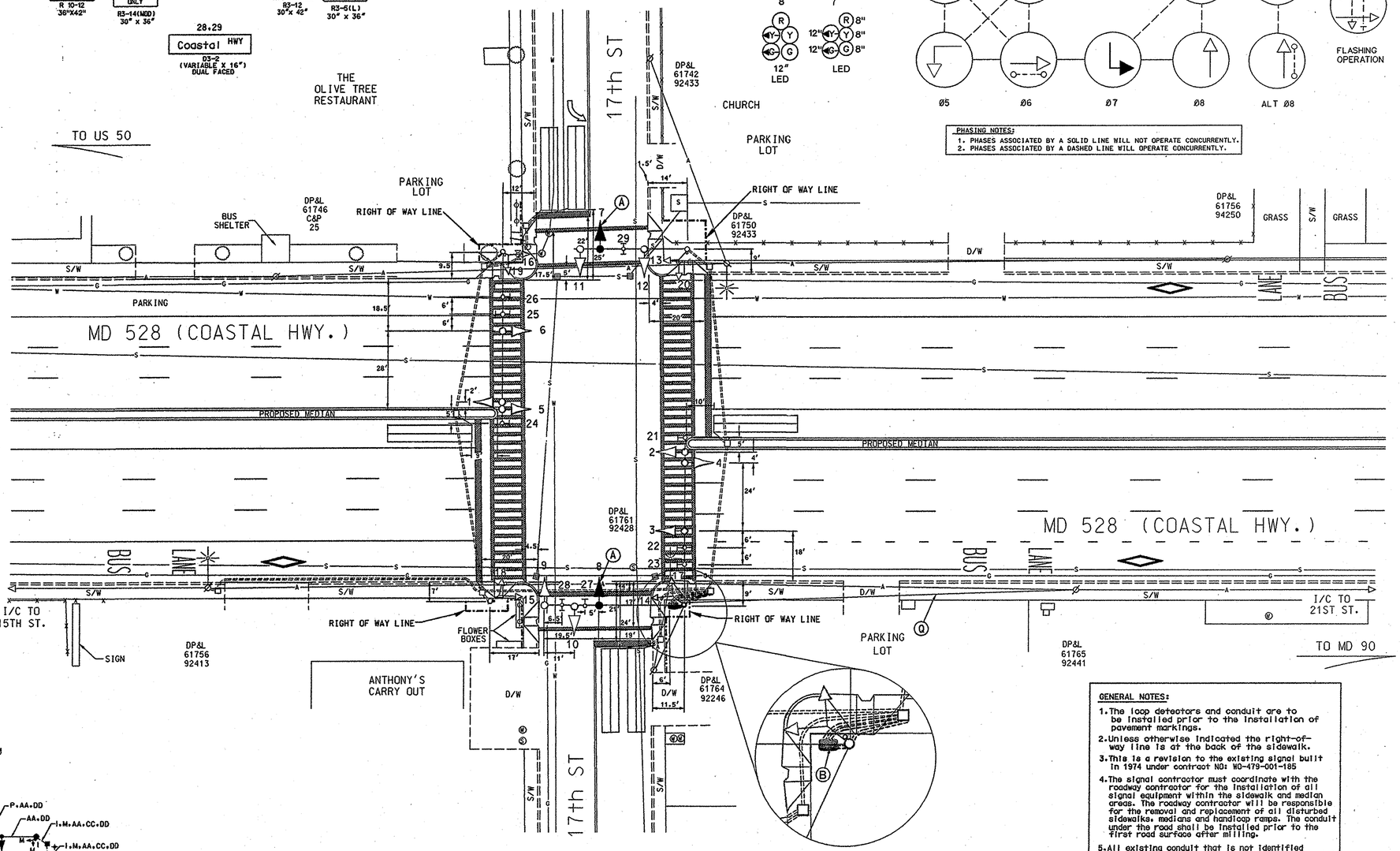

GENERAL NOTES:

1. The loop detectors and conduit are to be installed prior to the installation of pavement markings.
2. Unless otherwise indicated the right-of-way line is at the back of the sidewalk.
3. This is a revision to the existing signal built in 1974 under contract NO: WO-479-001-185
4. The signal contractor must coordinate with the roadway contractor for the installation of all signal equipment within the sidewalk and median areas. The roadway contractor will be responsible for the removal and replacement of all disturbed sidewalks, medians and handicap ramps. The conduit under the road shall be installed prior to the first road surface after milling.
5. All existing conduit that is not identified shall be capped and abandoned (See removal sheet.)

WIRING DIAGRAM

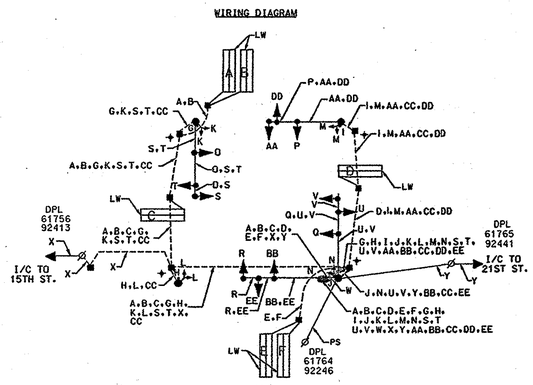

WIRING KEY

A	2-CONDUCTOR ELECTRICAL CABLE (NO. 14 A.W.G.) (ALUMINUM SHIELDED)	TRUNK
B	2-CONDUCTOR ELECTRICAL CABLE (NO. 14 A.W.G.)	LINE
C	5-CONDUCTOR ELECTRICAL CABLE (NO. 14 A.W.G.)	BUS
D	7-CONDUCTOR ELECTRICAL CABLE (NO. 14 A.W.G.)	BUS
E	3-WIRE ELECTRICAL CABLE (NO. 4 A.W.G.)	
X	12-PAIR, VOICE-GRADE INTERCONNECT CABLE (NO 19 AWG) (SELF-SUPPORTING)	
CC	STRANDED BARE COPPER GROUND WIRE (#6 A.W.G.)	
LW	LOOP WIRE (NO. 14 A.W.G.)	
PS	PROPOSED OVERHEAD SERVICE TO BE INSTALLED BY CONNECTIV	
+	GROUND ROD	

GEOMETRIC LEGEND

PROPOSED
EXISTING

LEGEND OF UNDERGROUND AND OVERHEAD UTILITIES

AERIAL CABLE	A	A
ELECTRIC	E	E
TELEPHONE	T	T
GAS	G	G
SEWER	S	S
WATER	W	W
CABLE TV	TV	TV

REVISIONS

6	PROVIDE E/P LEFT TURN ON E/B 17th SHOP FORCES	APRIL 6, 2006
2	REDLINE NO. 2	11/00
1	REVISION NEW SHEET	9/25/00
A	RECONSTRUCT SIGNAL USING MAST/ARMS S.H.A. NO. WO7005184	4-28-00

APPROVALS

ASST. CHIEF TEDD SECTION
ASST. DISTRICT ENGINEER, TRAFFIC
CHIEF, TRAFFIC ENGINEERING DESIGN DIVISION
DIRECTOR, TRAFFIC & SAFETY

ORIGINAL ON FILE

MARYLAND DOT - STATE HIGHWAY ADMINISTRATION
Office of Traffic & Safety
TRAFFIC ENGINEERING DESIGN DIVISION
MD 528 (COASTAL HWY) AND 17th ST

DRAWN BY: WM MUNK	COUNTY: WORCESTER	TS NO. 361B	SHEET NO.
CHECK BY:	LOG MILE: 23052807.44		
DATE: 2-10-95	F.A.P. NO.	T.I.M.S. NO. H492	1 OF 1
SCALE: 1"= 20'	S.H.A. NO. WO-479-001-185		