F H W A REGION NO.	STATE	FED. AID PROJ. NO.	SHEET NO.	TOTAL SHEETS
3	MD			

NOTE:
MD 528 IS ASSUMED TO RUN IN A NORTH-SOUTH DIRECTION.

CONSTRUCTION DETAILS

D. INSTALL 27' STEEL POLE WITH A 38' MAST ARM, TRAFFIC SIGNAL HEADS, PEDESTRIAN SIGNAL HEADS, PUSHBUTTON AND PEDESTRIAN EDUCATION SIGN AS SHOWN. (NOTE: 1-2", 90° POLYVINYL CHLORIDE (SCHEDULE 40) BEND.) (NOTE: POLE MUST BE CUT TO 21' HEIGHT AND MAST ARM CUT TO 30' LENGTH, CLEANED, GALVANIZED AND CAPPED.)

E. INSTALL 27' STEEL POLE WITH A 60' MAST ARM, TRAFFIC SIGNAL HEADS, SIGNS, PEDESTRIAN SIGNAL HEADS, PUSHBUTTON AND PEDESTRIAN EDUCATION SIGN AS SHOWN. (NOTE: 1-2", 90° POLYVINYL CHLORIDE (SCHEDULE 40) BEND.) (NOTE: POLE MUST BE CUT TO 21' HEIGHT, CLEANED, GALVANIZED AND CAPPED.)

F. INSTALL 27' STEEL POLE WITH TWIN 50'-60' MAST ARMS, TRAFFIC SIGNAL HEADS, SIGNS, PEDESTRIAN SIGNAL HEADS, PUSHBUTTON, PEDESTRIAN EDUCATION SIGN, 1-2" WEATHERHEAD, METER SOCKET, DISCONNECT SWITCH, 1-1 1/4" RISER AND 1 1/4" WEATHERHEAD AS SHOWN. (NOTE: 1-2", 90° POLYVINYL CHLORIDE (SCHEDULE 80) BEND AND 1-3", 90° POLYVINYL CHLORIDE (SCHEDULE 40) BEND.) (NOTE: POLE MUST BE CUT TO 21' HEIGHT, CLEANED, GALVANIZED AND CAPPED.)

L. INSTALL 10' BREAKAWAY PEDESTAL POLE, PEDESTRIAN SIGNAL HEADS, PUSHBUTTON AND PEDESTRIAN EDUCATION SIGN AS SHOWN. (NOTE: 1-2", 90° POLYVINYL CHLORIDE (SCHEDULE 40) BEND.)

R. INSTALL NEMA SIZE "6" BASE-MOUNTED CABINET AND CONTROLLER WITH ALL NECESSARY EQUIPMENT AS SHOWN. (NOTE: 1-2", 90° POLYVINYL CHLORIDE (SCHEDULE 80) BEND AND 2-4", 90° POLYVINYL CHLORIDE (SCHEDULE 40) BENDS.)

V. INSTALL HANDHOLE (FRAME AND COVER) FOR TRAFFIC SIGNAL EQUIPMENT.

Y. INSTALL 6' X 30' LOOP DETECTOR ENCASED IN 1/4" FLEXIBLE TUBING QUADRUPOLE TYPE (2-4-2).

b. INSTALL 1" LIQUID TIGHT FLEXIBLE NON-METALLIC ELECTRICAL CONDUIT (DETECTOR WIRE SLEEVE).

c. INSTALL 2" POLYVINYL CHLORIDE ELECTRICAL CONDUIT (SCHEDULE 80) (SLOTTED).

d. INSTALL 3" POLYVINYL CHLORIDE ELECTRICAL CONDUIT (SCHEDULE 80) (SLOTTED).

f. INSTALL 2" POLYVINYL CHLORIDE ELECTRICAL CONDUIT (SCHEDULE 80) (TRENCHED).

g. INSTALL 2" POLYVINYL CHLORIDE ELECTRICAL CONDUIT (SCHEDULE 40) (TRENCHED).

h. INSTALL 3" POLYVINYL CHLORIDE ELECTRICAL CONDUIT (SCHEDULE 40) (TRENCHED).

i. INSTALL 4" POLYVINYL CHLORIDE ELECTRICAL CONDUIT (SCHEDULE 40) (TRENCHED).

k. INSTALL PAVEMENT MARKING AS SHOWN.

n. INSTALL HANDHOLE (FRAME AND COVER) FOR TOWN OF OCEAN CITY UTILITY USE.

o. PROPOSED OVERHEAD ELECTRICAL SERVICE TO BE INSTALLED BY DP&L.

p. EXISTING OVERHEAD INTERCONNECT CABLE TO BE REMOVED AND REPLACED. (SEE WIRING DIAGRAM)

q. INSTALL 1-2" POLYVINYL CHLORIDE (SCHEDULE 40) RISER, 1-2" WEATHERHEAD AND 1-2", 90° POLYVINYL CHLORIDE (SCHEDULE 40) BEND ONTO EXISTING UTILITY POLE FOR INTERCONNECT AS SHOWN.

SIGNS

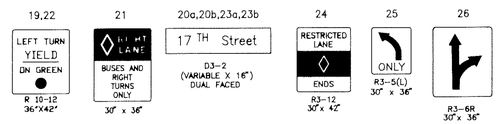

SIGNALS

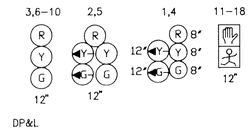

NEMA PHASING

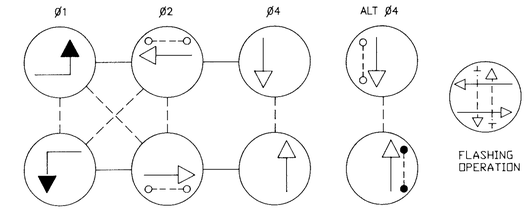

PHASING NOTES:
1. PHASES ASSOCIATED BY A SOLID LINE WILL NOT OPERATE CONCURRENTLY.
2. PHASES ASSOCIATED BY A DASHED LINE WILL OPERATE CONCURRENTLY.

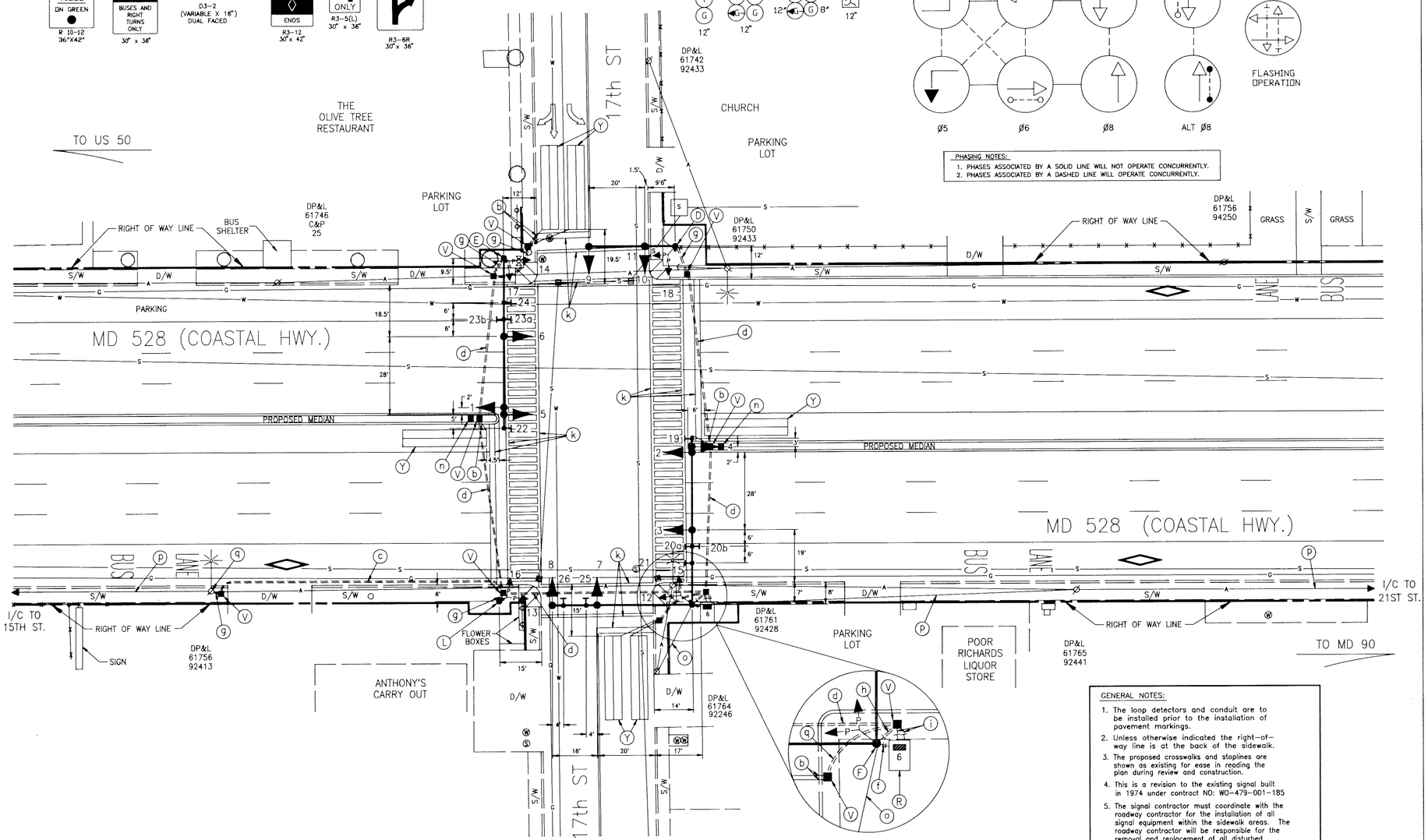

PHASING CHART

	1	2	3	4	5	6	7	8	9	10	11	12	13	14	15	16	17	18
PHASE 1 & 5	G	G	R	G	G	R	R	R	R	R	DW	DW	DW	DW	DW	DW	DW	DW
1 & 5 CHANGE	TO PHASE 1 & 6 OR PHASE 2 & 5										DW	DW	DW	DW	DW	DW	DW	DW
PHASE 1 & 6	G	G	G	R	R	R	R	R	R	R	DW	DW	DW	DW	DW	DW	DW	DW
1 CHANGE	G	G	G	R	R	R	R	R	R	R	DW	DW	DW	DW	DW	DW	DW	DW
PHASE 2 & 5	R	R	R	G	G	G	R	R	R	R	DW	DW	DW	DW	DW	DW	DW	DW
5 CHANGE	R	R	R	Y	Y	G	R	R	R	R	DW	DW	DW	DW	DW	DW	DW	DW
PHASE 2 & 6	G	G	G	G	G	G	R	R	R	R	WK	WK	WK	WK	DW	DW	DW	DW
PED CLEARANCE	G	G	G	G	G	G	R	R	R	R	FL/DW	FL/DW	FL/DW	FL/DW	DW	DW	DW	DW
2 & 6 CHANGE	Y	Y	Y	Y	Y	Y	R	R	R	R	DW	DW	DW	DW	DW	DW	DW	DW
PHASE 4 & 8	R	R	R	R	R	R	G	G	G	G	DW	DW	DW	DW	DW	DW	DW	DW
4 & 8 CHANGE	R	R	R	R	R	R	Y	Y	Y	Y	DW	DW	DW	DW	DW	DW	DW	DW
PHASE 4 & 8 ALT	R	R	R	R	R	R	G	G	G	G	DW	DW	DW	WK	WK	WK	WK	WK
PED CLEARANCE	R	R	R	R	R	R	G	G	G	G	DW	DW	DW	FL/DW	FL/DW	FL/DW	FL/DW	FL/DW
4 & 8 ALT CHANGE	R	R	R	R	R	R	Y	Y	Y	Y	DW	DW	DW	DW	DW	DW	DW	DW
FLASHING OPERATION	FL/Y	FL/Y	FL/Y	FL/Y	FL/Y	FL/Y	FL/R	FL/R	FL/R	FL/R	DARK	DARK	DARK	DARK	DARK	DARK	DARK	DARK

WIRING DIAGRAM

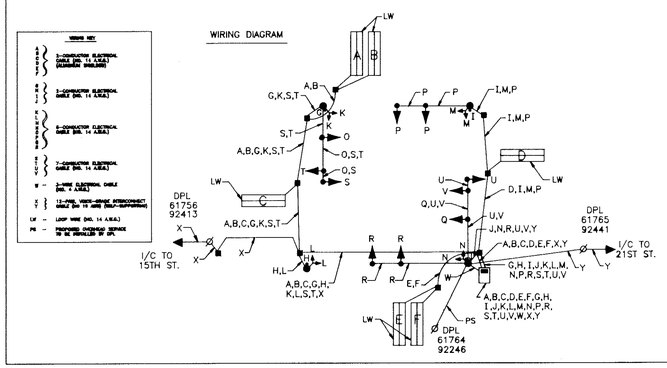

GENERAL NOTES:
1. The loop detectors and conduit are to be installed prior to the installation of pavement markings.
2. Unless otherwise indicated the right-of-way line is at the back of the sidewalk.
3. The proposed crosswalks and stoplines are shown as existing for ease in reading the plan during review and construction.
4. This is a revision to the existing signal built in 1974 under contract NO: WO-479-001-185
5. The signal contractor must coordinate with the roadway contractor for the installation of all signal equipment within the sidewalk areas. The roadway contractor will be responsible for the removal and replacement of all disturbed sidewalks and handicap ramps.

GEOMETRIC LEGEND
PROPOSED
EXISTING

LEGEND OF UNDERGROUND AND OVERHEAD UTILITIES

AERIAL CABLE	A	A
ELECTRIC	E	E
TELEPHONE	T	T
GAS	G	G
SEWER	S	S
WATER	W	W
CABLE TV	TV	TV

STREET TRAFFIC STUDIES, LTD.
Gateway International
1302 Concourse Drive, Suite 104
Linthicum, Maryland 21090
(410) 859-3553
2545-17

REVISIONS
A 3-25-96 RECONSTRUCT SIGNAL USING MAST ARMS S.H.A. NO.: WO-700-201-183 RRZ

APPROVALS
CHIEF, SIGNAL DESIGN SECTION
ASST. DISTRICT ENGINEER, TRAFFIC
CHIEF, TRAFFIC ENGINEERING DESIGN DIVISION
DIRECTOR, OFFICE OF TRAFFIC AND SAFETY
ORIGINAL ON FILE

MDOT – STATE HIGHWAY ADMINISTRATION
Office of Traffic and Safety
TRAFFIC ENGINEERING DESIGN DIVISION

LOG MILE: 23052807.44

DRAWN BY: WM MUNK
DES. BY:
CHK. BY:

MD 528 (COASTAL HWY) AND 17th ST
COUNTY WORCESTER

DATE: 2-10-95
SCALE: 1"= 20'
F.A.P. NO.
S.H.A. NO. WO-479-001-185
TS NO. TS-361A
SHEET NO. ___ OF ___