MD 528 IS ASSUMED TO RUN IN A NORTH-SOUTH DIRECTION

GENERAL NOTES

1. ALL UNDERGROUND AND OVERHEAD UTILITIES SHOWN ON THESE PLANS ARE SCHEMATIC ONLY AND MAY NOT BE COMPLETE. THE CONTRACTOR SHALL BE RESPONSIBLE FOR NOTIFYING MISS UTILITY PRIOR TO THE CONSTRUCTION SO THAT ALL UTILITIES MAY BE LOCATED IN THE FIELD. IF THE CONTRACTOR PERCEIVES THAT A CONFLICT BETWEEN UTILITIES AND THE TRAFFIC SIGNAL WILL OCCUR, THE CONTRACTOR SHALL NOTIFY THE PROJECT ENGINEER IMMEDIATELY SO THAT THE CONFLICT MAY BE RESOLVED.
2. THE CONTRACTOR SHALL REPAIR ANY DAMAGE TO EXISTING SIDEWALKS CAUSED BY THE INSTALLATION OF TRAFFIC SIGNAL EQUIPMENT.
3. INSTALL LOOP DETECTORS PRIOR TO THE INSTALLATION OF PAVEMENT MARKINGS.

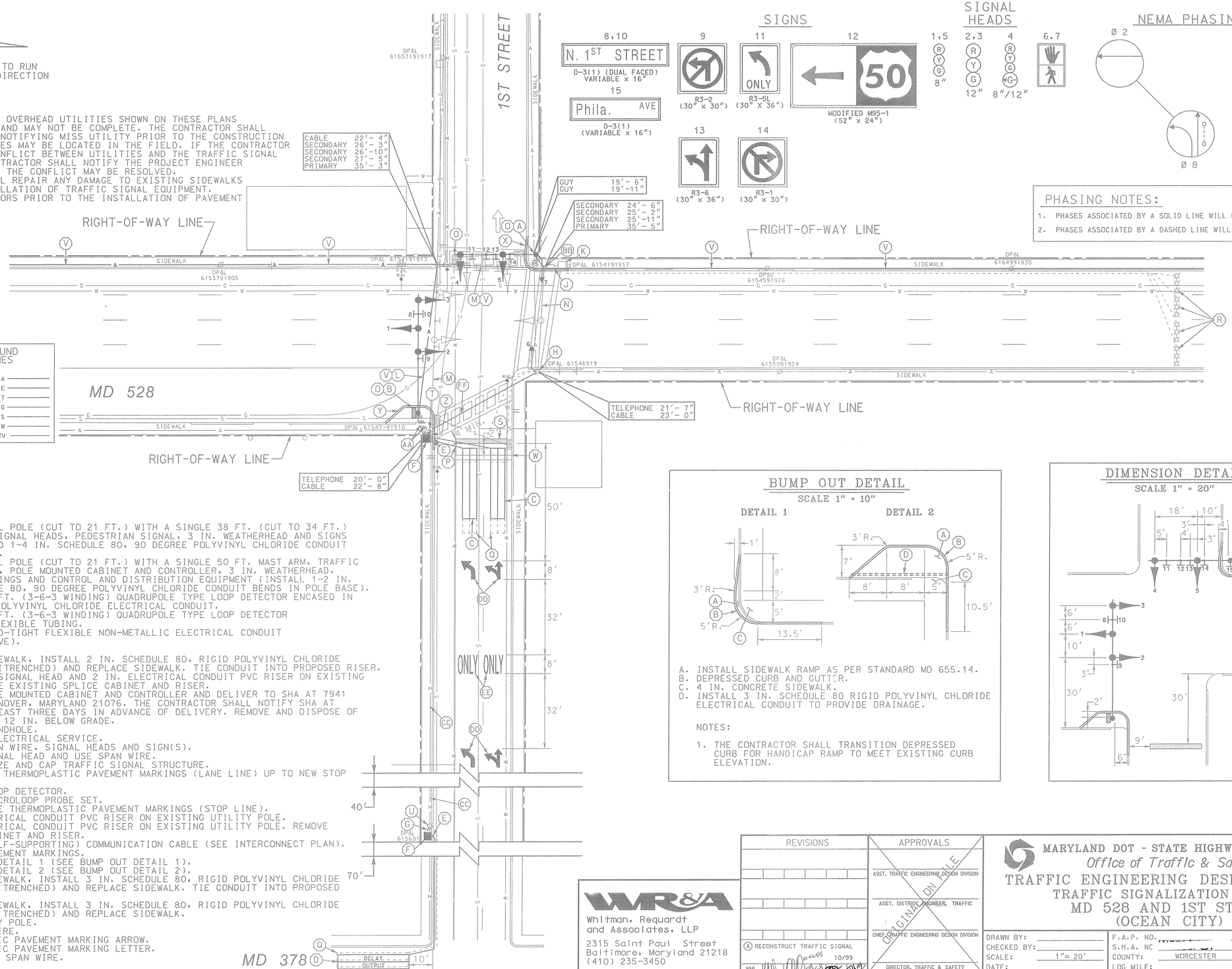

LEGEND OF UNDERGROUND AND OVERHEAD UTILITIES

AERIAL CABLE	A
ELECTRICAL	E
TELEPHONE	T
GAS	G
SEWER	S
WATER	W
CABLE TV	TV

SIGNS

8,10 — N. 1ST STREET — D-3(1) (DUAL FACED) VARIABLE x 16"

15 — Phila. AVE — D-3(1) (VARIABLE x 16")

9 — R3-2 (30" x 30")

11 — ONLY — R3-5L (30" x 36")

12 — 50 — MODIFIED M95-1 (52" x 24")

13 — R3-6 (30" x 36")

14 — R3-1 (30" x 30")

SIGNAL HEADS

1,5 — R Y G — 8"

2,3 — R Y G — 12"

4 — R Y G — 8"/12"

6,7

NEMA PHASING

Ø 2

Ø 8

FLASHING OPERATION

PHASING NOTES:

1. PHASES ASSOCIATED BY A SOLID LINE WILL NOT OPERATE CONCURRENTLY.
2. PHASES ASSOCIATED BY A DASHED LINE WILL OPERATE CONCURRENTLY.

CONSTRUCTION DETAILS

A. INSTALL 27 FT. STEEL POLE (CUT TO 21 FT.) WITH A SINGLE 38 FT. (CUT TO 34 FT.) MAST ARM, TRAFFIC SIGNAL HEADS, PEDESTRIAN SIGNAL, 3 IN. WEATHERHEAD AND SIGNS (INSTALL 1-2 IN. AND 1-4 IN. SCHEDULE 80, 90 DEGREE POLYVINYL CHLORIDE CONDUIT BENDS IN POLE BASE).
B. INSTALL 27 FT. STEEL POLE (CUT TO 21 FT.) WITH A SINGLE 50 FT. MAST ARM, TRAFFIC SIGNAL HEADS, SIGNS, POLE MOUNTED CABINET AND CONTROLLER, 3 IN. WEATHERHEAD, 2-3 IN. BLIND COUPLINGS AND CONTROL AND DISTRIBUTION EQUIPMENT (INSTALL 1-2 IN. AND 2-3 IN. SCHEDULE 80, 90 DEGREE POLYVINYL CHLORIDE CONDUIT BENDS IN POLE BASE).
C. INSTALL 6 FT. X 30 FT. (3-6-3 WINDING) QUADRUPOLE TYPE LOOP DETECTOR ENCASED IN 3/4 IN. SCHEDULE 80 POLYVINYL CHLORIDE ELECTRICAL CONDUIT.
D. INSTALL 6 FT. X 30 FT. (3-6-3 WINDING) QUADRUPOLE TYPE LOOP DETECTOR ENCASED IN 1/4 IN. FLEXIBLE TUBING.
E. INSTALL 1 IN. LIQUID-TIGHT FLEXIBLE NON-METALLIC ELECTRICAL CONDUIT (DETECTOR WIRE SLEEVE).
F. INSTALL HANDHOLE.
G. REMOVE EXISTING SIDEWALK. INSTALL 2 IN. SCHEDULE 80, RIGID POLYVINYL CHLORIDE ELECTRICAL CONDUIT (TRENCHED) AND REPLACE SIDEWALK. TIE CONDUIT INTO PROPOSED RISER.
H. INSTALL PEDESTRIAN SIGNAL HEAD AND 2 IN. ELECTRICAL CONDUIT PVC RISER ON EXISTING UTILITY POLE. REMOVE EXISTING SPLICE CABINET AND RISER.
J. REMOVE EXISTING BASE MOUNTED CABINET AND CONTROLLER AND DELIVER TO SHA AT 7941 CONNOLLEY DRIVE, HANOVER, MARYLAND 21076. THE CONTRACTOR SHALL NOTIFY SHA AT (410) 787-7652 AT LEAST THREE DAYS IN ADVANCE OF DELIVERY. REMOVE AND DISPOSE OF EXISTING FOUNDATION 12 IN. BELOW GRADE.
K. ABANDON EXISTING HANDHOLE.
L. PROPOSED OVERHEAD ELECTRICAL SERVICE.
M. REMOVE EXISTING SPAN WIRE, SIGNAL HEADS AND SIGN(S).
N. REMOVE EXISTING SIGNAL HEAD AND USE SPAN WIRE.
O. CUT, CLEAN, GALVANIZE AND CAP TRAFFIC SIGNAL STRUCTURE.
P. INSTALL 5 IN. WHITE THERMOPLASTIC PAVEMENT MARKINGS (LANE LINE) UP TO NEW STOP LINE LOCATION.
Q. ABANDON EXISTING LOOP DETECTOR.
R. ABANDON EXISTING MICROLOOP PROBE SET.
S. INSTALL 24 IN. WHITE THERMOPLASTIC PAVEMENT MARKINGS (STOP LINE).
T. INSTALL 3 IN. ELECTRICAL CONDUIT PVC RISER ON EXISTING UTILITY POLE.
U. INSTALL 2 IN. ELECTRICAL CONDUIT PVC RISER ON EXISTING UTILITY POLE. REMOVE EXISTING SPLICE CABINET AND RISER.
V. INSTALL 12-PAIR (SELF-SUPPORTING) COMMUNICATION CABLE (SEE INTERCONNECT PLAN).
W. REMOVE EXISTING PAVEMENT MARKINGS.
X. CONSTRUCT BUMP OUT DETAIL 1 (SEE BUMP OUT DETAIL 1).
Y. CONSTRUCT BUMP OUT DETAIL 2 (SEE BUMP OUT DETAIL 2).
Z. REMOVE EXISTING SIDEWALK. INSTALL 3 IN. SCHEDULE 80, RIGID POLYVINYL CHLORIDE ELECTRICAL CONDUIT (TRENCHED) AND REPLACE SIDEWALK. TIE CONDUIT INTO PROPOSED PVC RISER.
AA. REMOVE EXISTING SIDEWALK. INSTALL 3 IN. SCHEDULE 80, RIGID POLYVINYL CHLORIDE ELECTRICAL CONDUIT (TRENCHED) AND REPLACE SIDEWALK.
BB. USE EXISTING UTILITY POLE.
CC. USE EXISTING SPAN WIRE.
DD. INSTALL THERMOPLASTIC PAVEMENT MARKING ARROW.
EE. INSTALL THERMOPLASTIC PAVEMENT MARKING LETTER.
FF. INSTALL 3/8 IN. STEEL SPAN WIRE.

BUMP OUT DETAIL

SCALE 1" = 10"

A. INSTALL SIDEWALK RAMP AS PER STANDARD MD 655.14.
B. DEPRESSED CURB AND GUTTER.
C. 4 IN. CONCRETE SIDEWALK.
D. INSTALL 3 IN. SCHEDULE 80 RIGID POLYVINYL CHLORIDE ELECTRICAL CONDUIT TO PROVIDE DRAINAGE.

NOTES:

1. THE CONTRACTOR SHALL TRANSITION DEPRESSED CURB FOR HANDICAP RAMP TO MEET EXISTING CURB ELEVATION.

DIMENSION DETAIL

SCALE 1" = 20"

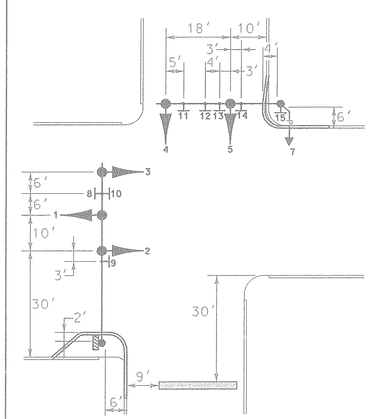

WR&A
Whitman, Requardt and Associates, LLP
2315 Saint Paul Street
Baltimore, Maryland 21218
(410) 235-3450

REVISIONS	APPROVALS
	ASST. TRAFFIC ENGINEERING DESIGN DIVISION
	ASST. DISTRICT ENGINEER, TRAFFIC
	CHIEF, TRAFFIC ENGINEERING DESIGN DIVISION
A RECONSTRUCT TRAFFIC SIGNAL — NML — 10/99	DIRECTOR, TRAFFIC & SAFETY

ORIGINAL ON FILE

MARYLAND DOT - STATE HIGHWAY ADMINISTRATION
Office of Traffic & Safety
TRAFFIC ENGINEERING DESIGN DIVISION
TRAFFIC SIGNALIZATION PLAN
MD 528 AND 1ST STREET
(OCEAN CITY)

DRAWN BY:	F.A.P. NO.	TS NO. 3735A	SHEET NO.
CHECKED BY:	S.H.A. NO.		
SCALE: 1" = 20'	COUNTY: WORCESTER	T.I.M.S. NO.	1 OF 7
DATE:	LOG MILE:		

AW276A5M/B5M M:\94002\30922T04.DGN