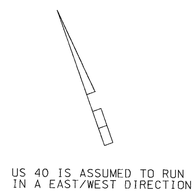

WIRING DIAGRAM

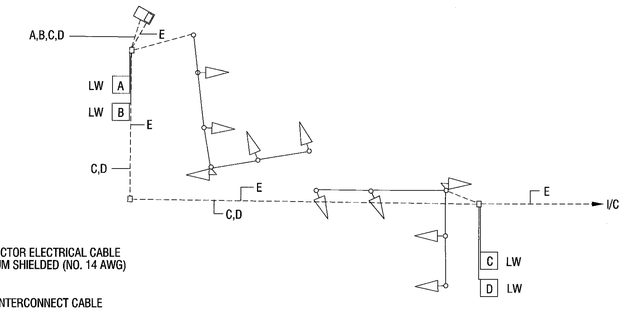

KEY

A, B, C, D — 2 CONDUCTOR ELECTRICAL CABLE ALUMINUM SHIELDED (NO. 14 AWG)

E — 12 PAIR INTERCONNECT CABLE

LW — LOOP WIRE

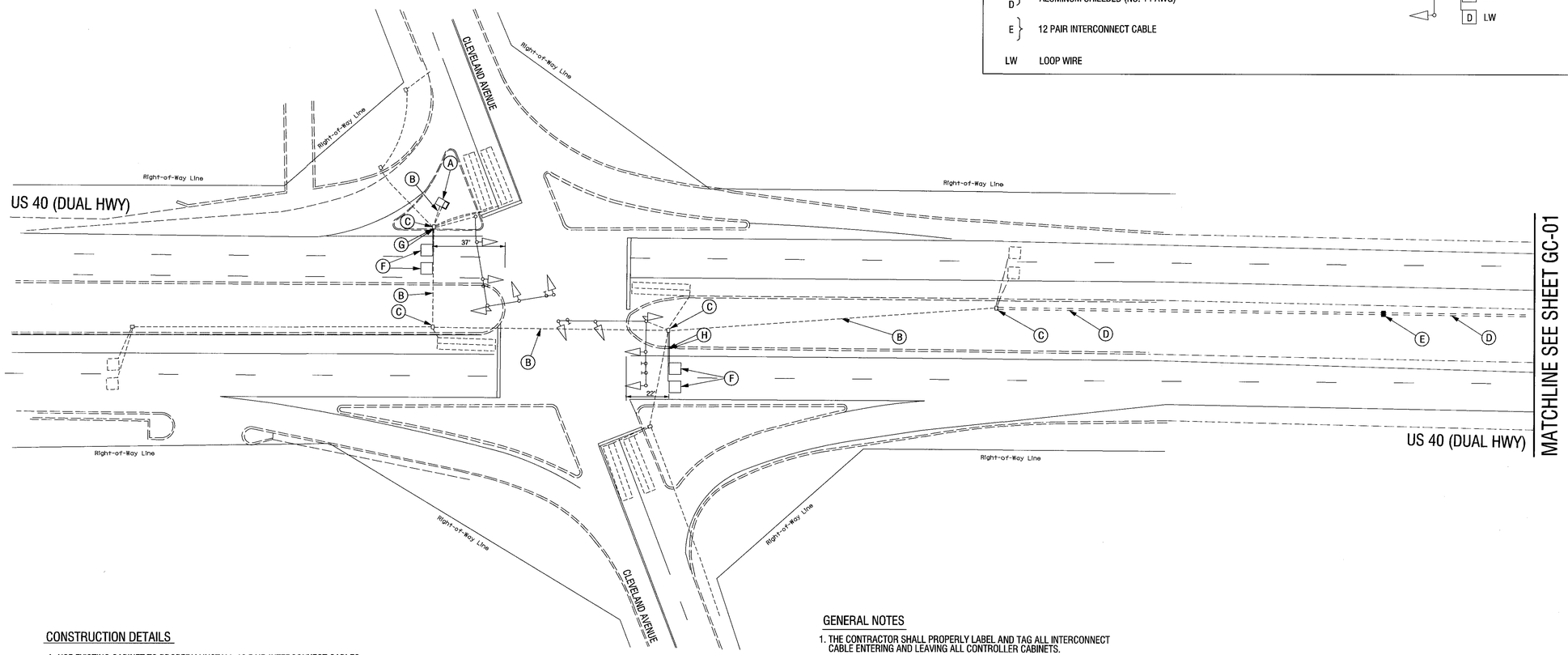

CONSTRUCTION DETAILS

A. USE EXISTING CABINET TO PROPERLY INSTALL 12 PAIR INTERCONNECT CABLES.
B. USE EXISTING CONDUIT AND INSTALL 12 PAIR UNDERGROUND INTERCONNECT CABLE.
C. USE EXISTING HANDHOLE.
D. INSTALL 2 IN SCHEDULE 80 PVC ELECTRICAL CONDUIT. (TRENCHED)
E. INSTALL HANDHOLE.
F. INSTALL 6 FT X 6 FT LOOP DETECTOR (4 TURNS) ENCASED IN ¼ IN. FLEXIBLE TUBING.
G. INSTALL 1 IN LIQUID TIGHT, FLEXIBLE NON-METALLIC ELECTRICAL CONDUIT (FOR DETECTOR WIRE SLEEVE).
H. INSTALL 1 IN GALVANIZED CONDUIT FOR DETECTOR WIRE SLEEVE.
J. INSTALL 4 IN SCHEDULE 80 PVC ELECTRICAL CONDUIT. (BORED).
K. INSTALL 4 IN SCHEDULE 80 PVC ELECTRICAL CONDUIT. (SLOTTED).

GENERAL NOTES

1. THE CONTRACTOR SHALL PROPERLY LABEL AND TAG ALL INTERCONNECT CABLE ENTERING AND LEAVING ALL CONTROLLER CABINETS.

GC-01

UTILITY LEGEND

SD	SD	STORM DRAIN
G	G	GAS MAIN
W	W	WATER MAIN
S	S	SEWER MAIN
E	E	ELECTRIC CABLES
A	A	AERIAL CABLES
T	T	TELEPHONE CABLES

SABRA, WANG & ASSOCIATES, INC.
1506 JOH AVENUE
SUITE 180
BALTIMORE, MD 21227
(410) 737-6564
WWW.SABRA-WANG.COM

REVISIONS

APPROVALS

TEAM LEADER, TRAFFIC ENGINEERING DESIGN DIVISION

ASST. CHIEF, TRAFFIC ENGINEERING DESIGN DIVISION

6/4/02

CHIEF, TRAFFIC ENGINEERING DESIGN DIVISION

6/4/02

DIRECTOR, OFFICE OF TRAFFIC & SAFETY

MARYLAND DOT - STATE HIGHWAY ADMINISTRATION
Office of Traffic & Safety
TRAFFIC ENGINEERING DESIGN DIVISION
INTERCONNECT PLAN
US 40 (DUAL HWY) FROM CLEVELAND AVENUE TO DAY/HEBB ROAD

DRAWN BY:	ANGELUS BULLOCK	F.A.P. NO.		TS NO.	
CHECKED BY:		S.H.A. NO.	WA1533A51B51		SHEET NO.
SCALE:	1" = 30'	COUNTY:	WASHINGTON	T.I.M.S. NO.	
DATE:	APRIL, 2002	LOG MILE:		E452	OF

R:\00-47\TASK15\DWG\INTERCONNECT\E452GC01.DGN