FHWA REGION NO	STATE	FED. AID PROJ. NO	SHEET NO.	TOTAL SHEETS
3	MD.	STPG-218-1(7)E	39	66

PHASING DIAGRAM

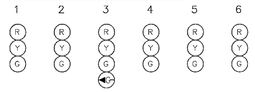

PHASE 2+6	G	G	G	G	R	R
2+6 CHANGE	Y	Y	Y	Y	R	R
PHASE 4	R	R	R	R	G	G
4 CHANGE	R	R	R	R	Y	Y
PRE-EMPTION A	R	R	G G	G	R	R
A CHANGE	R	R	Y	Y	R	R
PRE-EMPTION B	G	G	R	R	R	R
B CHANGE	Y	Y	R	R	R	R
PRE-EMPTION C	R	R	R	R	G	G
C CHANGE	R	R	R	R	Y	Y
FLASHING OPERATION	FL R	FL R	FL R	FL R	FL Y	FL Y

NEMA PHASING

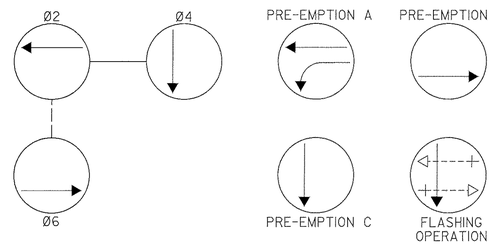

PHASING NOTES:

1. PHASES ASSOCIATED BY A SOLID LINE WILL NOT OPERATE CONCURRENTLY
2. PHASES ASSOCIATED BY A DASHED LINE WILL OPERATE CONCURRENTLY

DETAIL 'A'

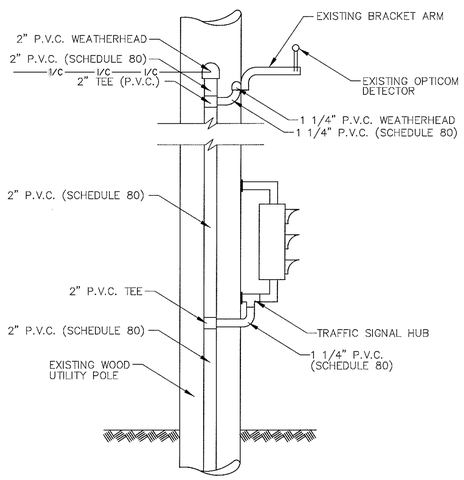

DETAIL 'B'

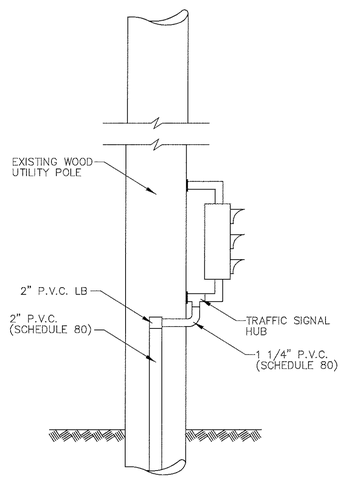

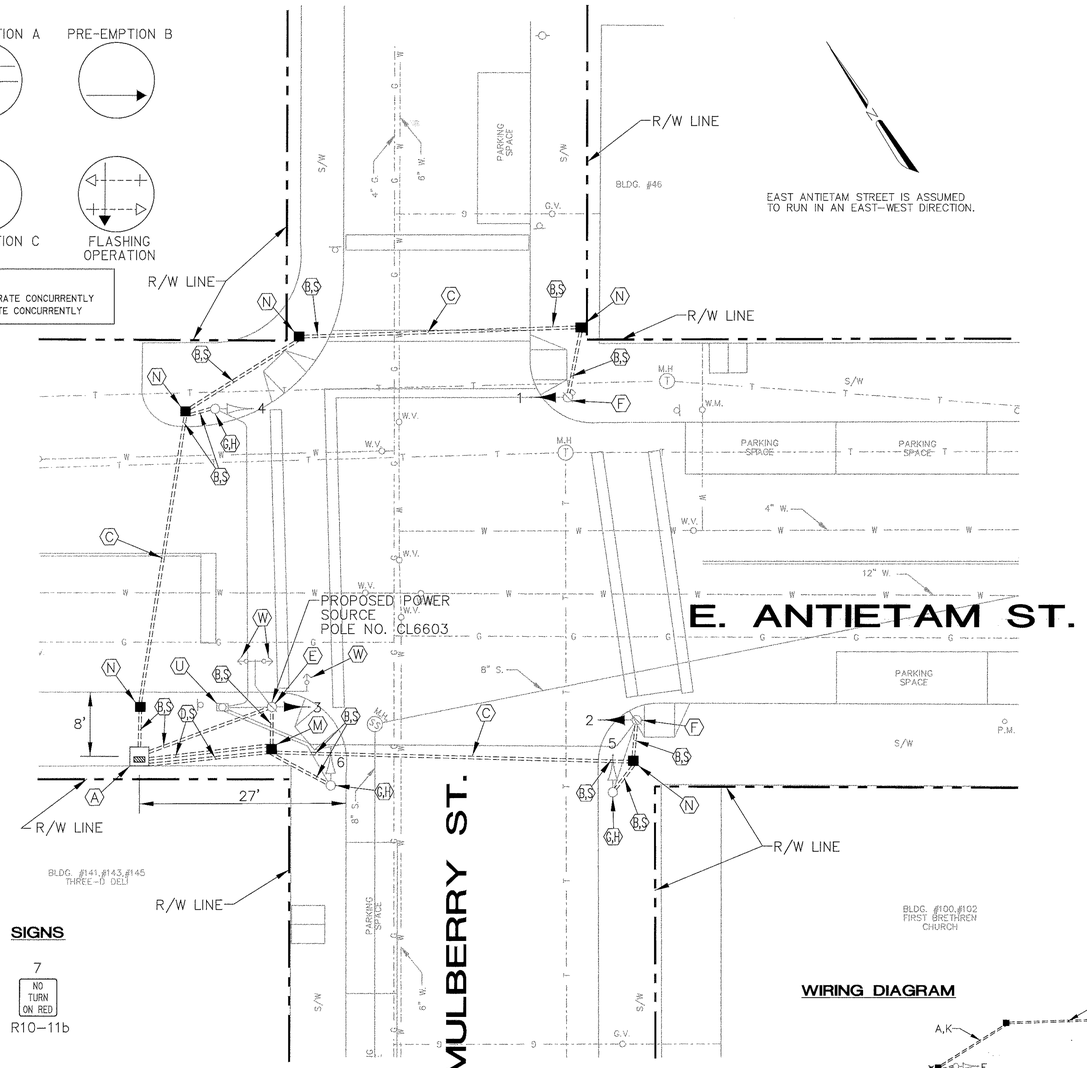

EQUIPMENT LISTS

A. EQUIPMENT TO BE SUPPLIED BY THE SHA.

QUANTITY	UNIT	SPECIFICATION SECTION	DESCRIPTION
1	EA	SP	BASE MOUNTED LOCAL CABINET (SIZE 5) LESS DETECTION EQUIPMENT WITH 8 PHASE ASC II CONTROLLER WITH TELEMETRY AND OPTICOM PRE-EMPTION MODULE

B. EQUIPMENT TO BE FURNISHED AND/OR INSTALLED BY THE CONTRACTOR.

QUANTITY	UNIT	SPECIFICATION SECTION	DESCRIPTION
5	CY	205	TEST PIT EXCAVATION
10	CY	206	REMOVAL OF EXISTING SIDEWALK
750	SF	610	4 INCH CONCRETE SIDEWALK
1	EA	816	INSTALL CONTROLLER AND CABINET-BASE MOUNT
1	EA	SP	FURNISH AND INSTALL 12 INCH 1 WAY 4 SECTION (R, Y, G, GA) SIGNAL HEAD HAVING PROPER SIDE POLE-MOUNTING BRACKET, AND TUNNEL VISORS-PAINTED BLACK
2	EA	SP	FURNISH AND INSTALL 8 INCH 1 WAY 3 SECTION (R, Y, G) SIGNAL HEAD HAVING PROPER SIDE POLE-MOUNTING BRACKET, AND TUNNEL VISORS-PAINTED BLACK
1	EA	811	FURNISH AND INSTALL ELECTRICAL HANDHOLE
5	EA	SP	FURNISH AND INSTALL ELECTRICAL HANDHOLE (CITY STANDARD)
1	CY	801	FURNISH AND INSTALL CONCRETE FOR SIGNAL FOUNDATION
3	EA	SP	FURNISH AND INSTALL CONDUIT BEND IN EXISTING BASE
20	LF	805	FURNISH AND INSTALL 1 1/4" SCHEDULE 80 RIGID PVC CONDUIT-RISER
70	LF	805	FURNISH AND INSTALL 2" SCHEDULE 80 RIGID PVC CONDUIT-RISER
130	LF	805	FURNISH AND INSTALL 2" SCHEDULE 40 RIGID PVC CONDUIT-TRENCHED
50	LF	805	FURNISH AND INSTALL 4" SCHEDULE 40 RIGID PVC CONDUIT-TRENCHED
110	LF	805	FURNISH AND INSTALL 2" SCHEDULE 80 RIGID PVC CONDUIT-SLOTTED
1	EA	807	FURNISH AND INSTALL CONTROL AND DISTRIBUTION EQUIPMENT
1	EA	SP	AS-BUILT FOR TRAFFIC SIGNAL
5	EA	804	FURNISH AND INSTALL GROUND ROD-3/4 INCH DIAMETER X 10-FOOT LENGTH
300	LF	810	FURNISH AND INSTALL NO. 6 AWG STRANDED BARE COPPER GROUND WIRE
200	LF	810	FURNISH AND INSTALL ELECTRICAL CABLE-1 CONDUCTOR (NO. 4 AWG - THHN/THWN)
550	LF	810	FURNISH AND INSTALL ELECTRICAL CABLE-5 CONDUCTOR (NO 14 AWG)
75	LF	810	FURNISH AND INSTALL ELECTRICAL CABLE-7 CONDUCTOR (NO 14 AWG)
200	LF	810	FURNISH AND INSTALL OPTICOM M-138 DETECTOR CABLE
1	EA	SP	REMOVE AND DISPOSE OF EXISTING FOUNDATION 12" BELOW GRADE
1	LS	SP	DELIVERY OF SALVAGED EQUIPMENT
1	LS	SP	REMOVE AND DISPOSE OF EXISTING EQUIPMENT
1	LS	SP	REMOVAL OF EXISTING SIGNAL EQUIPMENT TO BE SALVAGED

NOTE: ALL EQUIPMENT AND/OR MATERIALS TO BE REMOVED BY THE CONTRACTOR, BUT NOT LISTED BELOW, SHALL BECOME THE PROPERTY OF THE CONTRACTOR.

QUANTITY	UNIT	DESCRIPTION
1	EA	CONTROLLER AND CABINET
1	EA	PEDESTAL POLE AND BASE

SIGNALS

1,2,4, 5,6 — R Y G — 8"

3 — R Y G GA — 12"

SIGNS

7 — NO TURN ON RED — R10-11b

→ – OPTICAL PRE-EMPTION DETECTOR EYE

NOTE: SIGNALS 4,5&6 AND ALL SIGNS ARE EXISTING.

CONSTRUCTION DETAILS

(A) INSTALL BASE MOUNTED CABINET, SIZE #5, AND CONTROLLER WITH ALL NECESSARY EQUIPMENT AS SHOWN (NOTE: 2-4", 90-DEGREE P.V.C. BENDS AND 2-2" 90-DEGREE P.V.C. BENDS).

(B) INSTALL 2" P.V.C. (SCHEDULE 40) ELECTRICAL CONDUIT (TRENCHED).

(C) INSTALL 2" P.V.C. (SCHEDULE 80) ELECTRICAL CONDUIT (SLOTTED).

(D) INSTALL 4" P.V.C. (SCHEDULE 40) ELECTRICAL CONDUIT (TRENCHED).

(E) INSTALL 2" P.V.C. (SCHEDULE 80) ELECTRICAL CONDUIT - RISER WITH 2" WEATHERHEAD, 1 1/4" P.V.C. (SCHEDULE 80) ELECTRICAL CONDUIT - RISER, 1 1/4" P.V.C. WEATHERHEAD, AND SIGNAL HEAD WITH HUB HARDWARE (SEE DETAIL 'A'). REMOVE EXISTING RISER, SIGNAL HEAD AND HARDWARE.

(F) INSTALL 2" P.V.C. (SCHEDULE 80) ELECTRICAL CONDUIT - RISER WITH 2" P.V.C. ELBOW, 1 1/4" P.V.C. (SCHEDULE 80) ELECTRICAL CONDUIT, AND SIGNAL HEAD WITH HUB HARDWARE (SEE DETAIL 'B'). REMOVE EXISTING RISER, SIGNAL HEAD AND HARDWARE.

(G) INSTALL 2" P.V.C. BEND IN EXISTING BASE.

(H) USE EXISTING SIGNAL HEAD.

(M) INSTALL HANDHOLE

(N) INSTALL HANDHOLE (CITY STANDARD)

(S) REMOVE AND REPLACE EXISTING SIDEWALK.

(U) REMOVE EXISTING CONTROLLER, CABINET, PEDESTAL POLE AND FOUNDATION.

(W) USE EXISTING OPTICOM DETECTOR.

(V) INSTALL 10' OF 2" P.V.C. (SCHEDULE 80) ELECTRICAL CONDUIT - RISER AND COIL 25' OF ADDITIONAL CABLE.

UTILITY LEGEND

—— G —— G ——	GAS MAIN
—— W —— W ——	WATER MAIN
—— S —— S ——	SEWER MAIN
==========	STORM DRAIN
—— TV —— TV ——	CABLE TELEVISION
—— E —— E ——	ELECTRIC CABLES
—— T —— T ——	TELEPHONE CABLES
—— A —— A ——	AERIAL CABLES

INTERSECTION DESCRIPTION

I. GENERAL

THIS INTERSECTION IS SOUTH MULBERRY STREET AND EAST ANTIETAM STREET. CONSTRUCTION AT THIS INTERSECTION INVOLVES THE REPLACEMENT OF THE EXISTING TRAFFIC SIGNAL CONTROLLER AND INTERCONNECTION WITH THE OTHER SIGNALIZED INTERSECTIONS IN THE NEW CITY-WIDE SYSTEM. IT IS ASSUMED THAT EAST ANTIETAM STREET RUNS IN AN EAST-WEST DIRECTION.

II. INTERSECTION OPERATION

THE INTERSECTION WILL OPERATE IN A NEMA THREE (3) PHASE PRE-TIMED MODE. EASTBOUND AND WESTBOUND EAST ANTIETAM STREET WILL OPERATE CONCURRENTLY. SOUTHBOUND SOUTH MULBERRY STREET WILL OPERATE SEPARATELY.

PRE-EMPTION ON WESTBOUND EAST ANTIETAM STREET WILL CALL PRE-EMPTION A. PRE-EMPTION ON EASTBOUND EAST ANTIETAM STREET WILL CALL PRE-EMPTION B. PRE-EMPTION ON SOUTHBOUND SOUTH MULBERRY STREET WILL CALL PRE-EMPTION C.

A NEW EIGHT PHASE FULLY ACTUATED CONTROLLER WITH TELEMETRY MODULE AND PRE-EMPTION HOUSED IN A GROUND MOUNTED CABINET WILL BE INSTALLED.

WIRING DIAGRAM

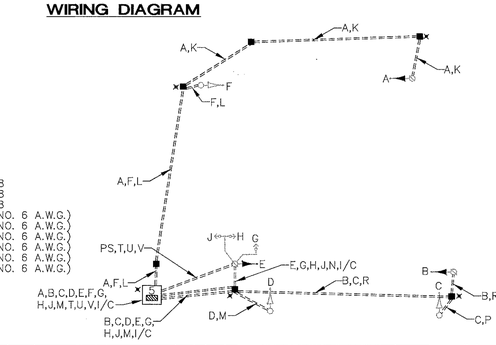

WIRING LEGEND

A – 5 CONDUCTOR CABLE (NO. 14 A.W.G.)
B – 5 CONDUCTOR CABLE (NO. 14 A.W.G.)
C – 5 CONDUCTOR CABLE (NO. 14 A.W.G.)
D – 5 CONDUCTOR CABLE (NO. 14 A.W.G.)
E – 7 CONDUCTOR CABLE (NO. 14 A.W.G.)
F – 5 CONDUCTOR CABLE (NO. 14 A.W.G.)
G – 3M OPTICOM DETECTOR CABLE, MODEL 138
H – 3M OPTICOM DETECTOR CABLE, MODEL 138
J – 3M OPTICOM DETECTOR CABLE, MODEL 138
K – STRANDED BARE COPPER GROUND WIRE (NO. 6 A.W.G.)
L – STRANDED BARE COPPER GROUND WIRE (NO. 6 A.W.G.)
M – STRANDED BARE COPPER GROUND WIRE (NO. 6 A.W.G.)
N – STRANDED BARE COPPER GROUND WIRE (NO. 6 A.W.G.)
P – STRANDED BARE COPPER GROUND WIRE (NO. 6 A.W.G.)
R – STRANDED BARE COPPER GROUND WIRE (NO. 6 A.W.G.)
T – 1 CONDUCTOR CABLE (NO. 4 A.W.G.)
U – 1 CONDUCTOR CABLE (NO. 4 A.W.G.)
V – 1 CONDUCTOR CABLE (NO. 4 A.W.G.)
× – 3/4"×10' GROUND ROD
PS – PROPOSED ELECTRICAL SERVICE
I/C – INTERCONNECT CABLE

CITY OF HAGERSTOWN, MARYLAND
ENGINEERING DEPARTMENT

LOCATION: South Mulberry St. at East Antietam St.

TITLE: TRAFFIC SIGNAL UPGRADE

DRAWN BY	A.W. (BASE PLAN)	DATE	8-96
SURVEY BY	A.J.B.	DATE	7-96
SCALES	HORIZONTAL: 1" = 10'	VERTICAL: –	
APPROVED		FILE NUMBER	
DATE		67-054-04	
BY	CITY ENGINEER		

REVISIONS	APPROVALS
	CHIEF, SIGNAL DESIGN SECTION
	ASST. DISTRICT ENGINEER, TRAFFIC
	CHIEF, TRAFFIC ENGINEERING DESIGN DIVISION
	DIRECTOR, OFFICE OF TRAFFIC & SAFETY

A/E GROUP, INC.
ENGINEERS • PLANNERS
181 E. Main Street
Westminster, Maryland 21158
A/E Job No. 96-317

MDOT - STATE HIGHWAY ADMINISTRATION
Office of Traffic & Safety
TRAFFIC ENGINEERING DESIGN DIVISION
LOG MI. 21MMULO1.27

DRAWN BY: T. COURVILLE
DES. BY: J. LAWRENCE
CHK. BY:

South Mulberry St. at East Antietam St.

COUNTY: WASHINGTON

DATE: 05/30/97
SCALE: 1" = 10'

F.A.P. NO. STPG-218-1(7)E
S.H.A. NO. WA9535135
CITY NO. 97-243-332

TS/STD. NO. 3708

SHEET NO. 39 OF 66