F H WA REGION NO	STATE	FED. AID PROJ. NO	SHEET NO.	TOTAL SHEETS
3	MD.			

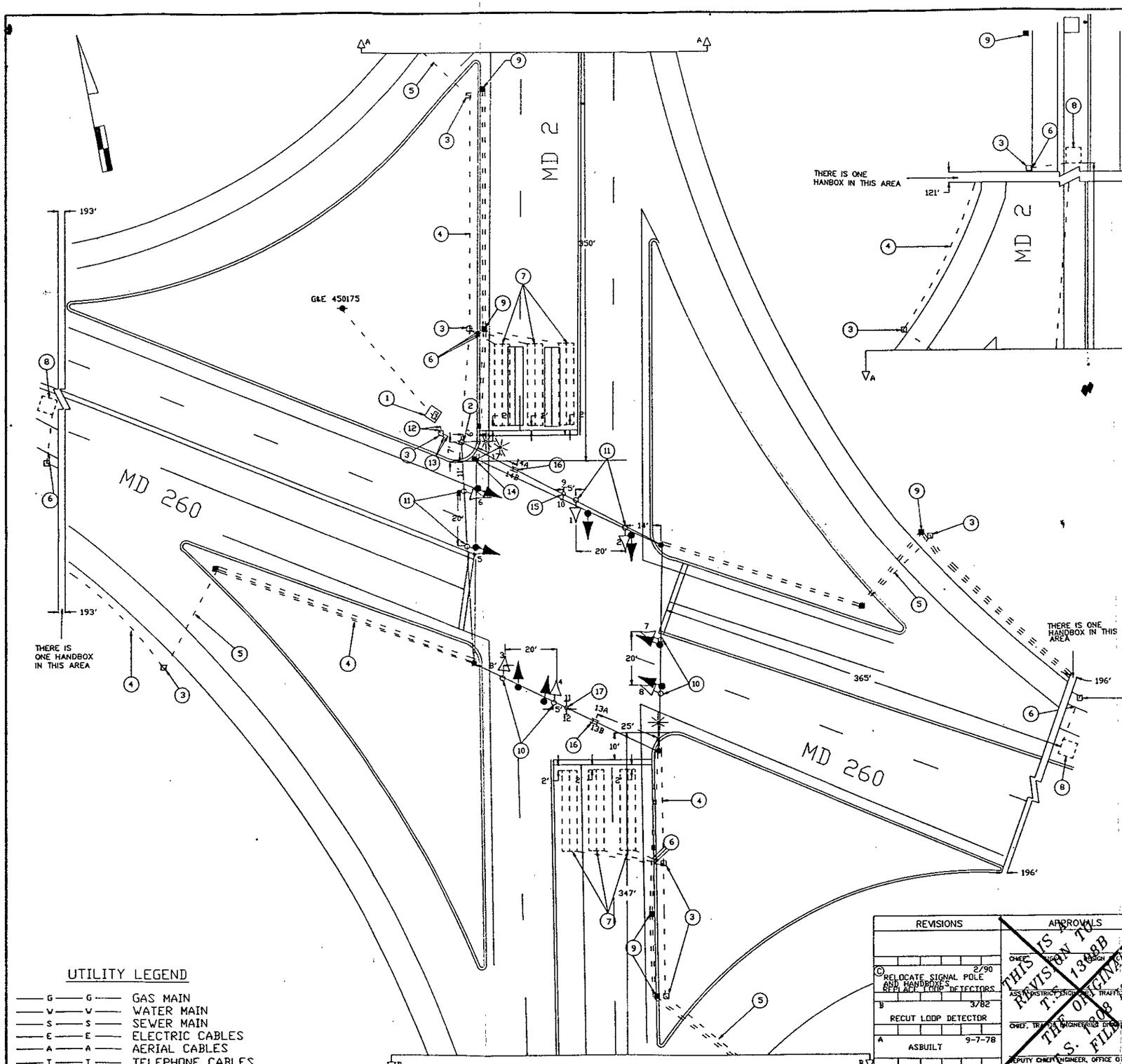

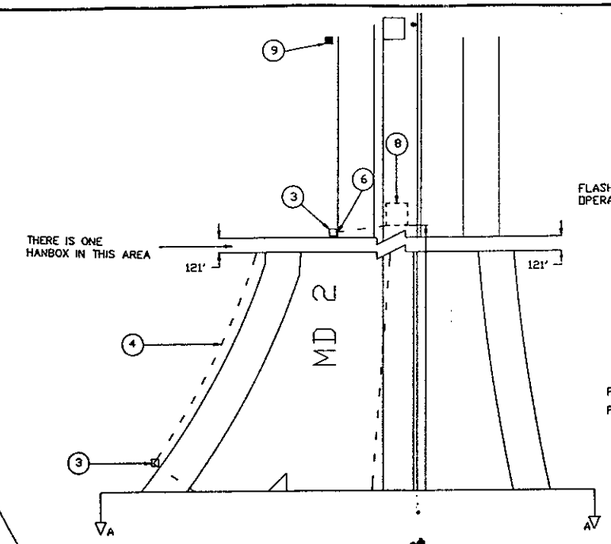

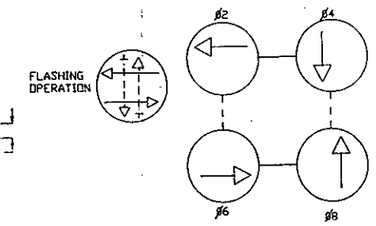

PROPOSED SIGNALS AND SIGNS

9-12 ONLY R 3-5(L) 30"X 36"

SIGNALS 1-8 12" R Y G

13A,13B,14A,14B CHESAPEAKE BEACH RD D3-2 16" X VARIABLE

PHASES ASSOCIATED BY A DASHED LINE WILL OPERATE CONCURRENTLY
PHASES ASSOCIATED BY A SOLID LINE WILL NOT OPERATE CONCURRENTLY

NOTES
1. ALL PAVEMENT MARKINGS SHOWN ARE PROPOSED AND UNLESS OTHERWISE NOTED, ARE TO BE INSTALLED BY OTHERS IN ACCORDANCE WITH S.H.A. STANDARDS
2. "D.O." INDICATES A DELAY-OUTPUT LOOP DETECTOR

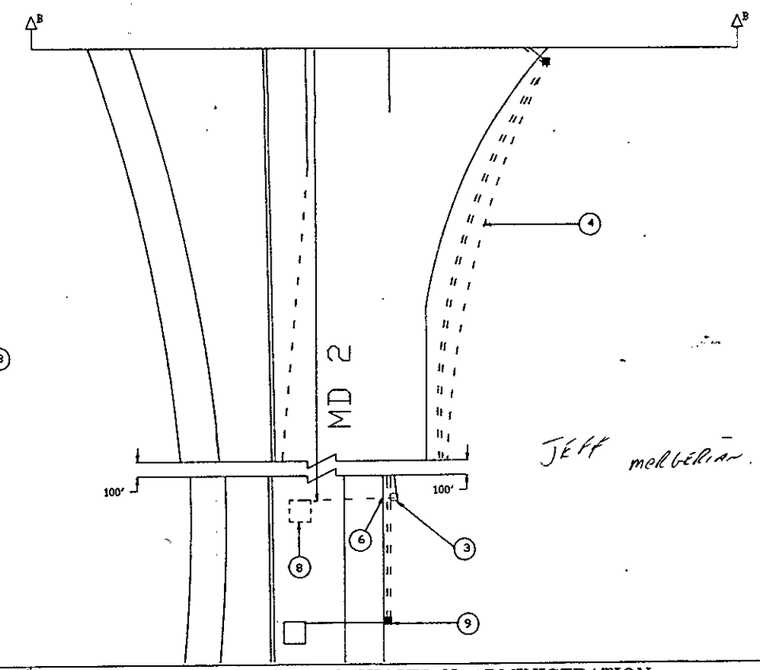

Jeff melberian.

UTILITY LEGEND

—G—G—	GAS MAIN
—W—W—	WATER MAIN
—S—S—	SEWER MAIN
—E—E—	ELECTRIC CABLES
—A—A—	AERIAL CABLES
—T—T—	TELEPHONE CABLES

REVISIONS	
C RELOCATE SIGNAL POLE AND HANDBOXES REPLACE LOOP DETECTORS	2/90
B RECUT LOOP DETECTOR	3/82
A ASBUILT	9-7-78

APPROVALS

CHIEF, HIGHWAY DESIGN DIVISION

ASS'T DISTRICT ENGINEER, TRAFFIC

CHIEF, TRAFFIC ENGINEERING DIVISION

DEPUTY CHIEF ENGINEER, OFFICE OF TRAFFIC

THIS IS A REVISION TO T.S. 1308B THE ORIGINAL 1308 IS ON FILE

MDOT – STATE HIGHWAY ADMINISTRATION
Office of Traffic
TRAFFIC ENGINEERING DIVISION

SIGNAL #

RB DRAWN BY: DERRICK DICKERSON
DES. BY: D ZAFIRIS
CHK. BY:

MD 2 AND MD 260

04000234.06 COUNTY: CALVERT

DATE: 5/1/96 F.A.P. NO.
SCALE: 1" = 20" S.H.A. NO.

TS/STD. NO. 1308 (C)

SHEET NO. ___ OF ___