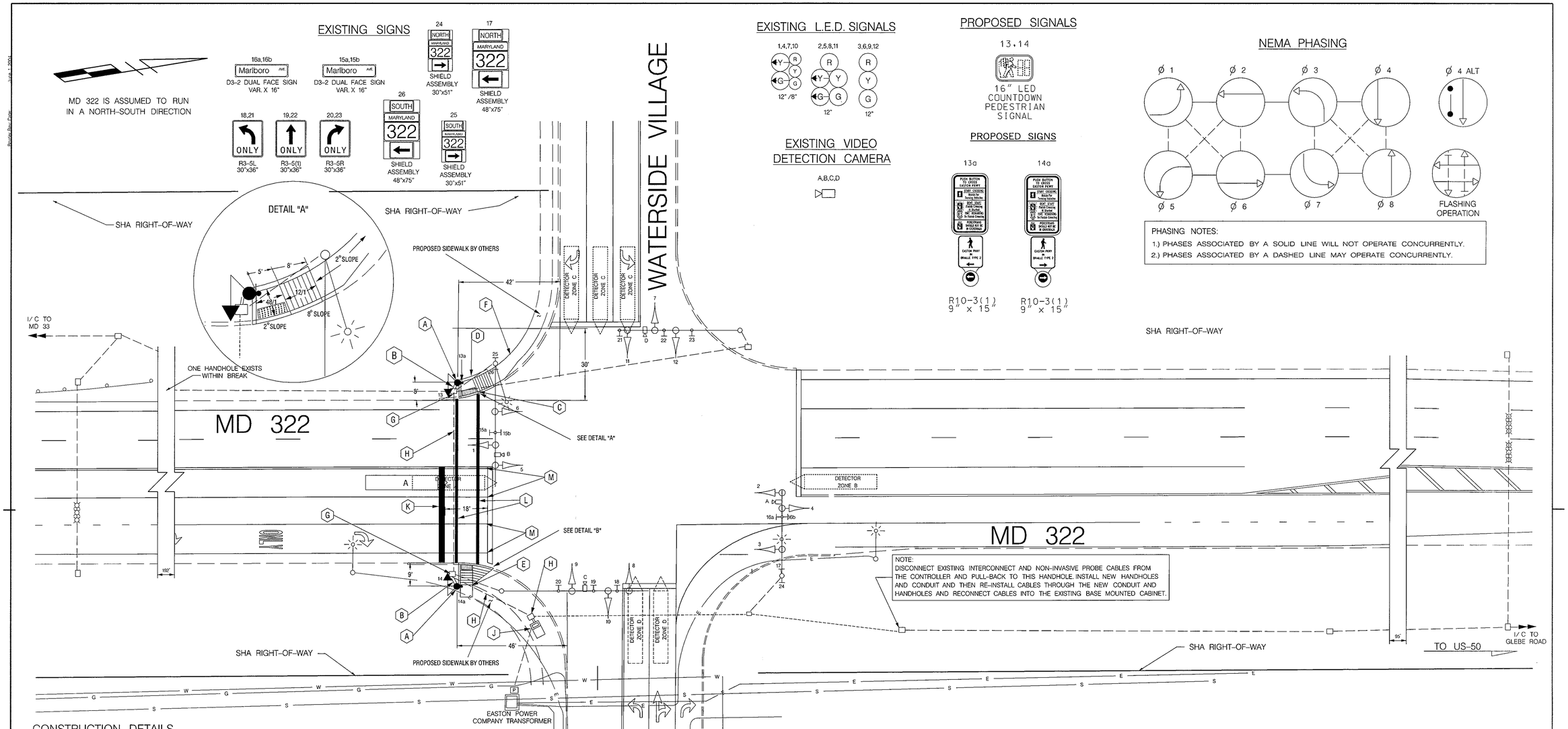

CONSTRUCTION DETAILS

A. INSTALL MODIFIED CONCRETE FOUNDATION (MD STD. 801.01-01), 10 FT. PEDESTAL POLE , COUNTDOWN PEDESTRIAN SIGNAL HEADS, APS PUSHBUTTON STATION, AND SIGNS, WITH 1- 2" PVC CONDUIT BEND
B. INSTALL 2 IN. PVC SCHEDULE 80 RIGID ELECTRICAL CONDUIT- TRENCHED
C. INSTALL PARRALLEL PEDESTRIAN RAMP (MD STD. 655.12) WITH DETECTABLE WARNING SURFACE (MD STD. 655.40)
D. INSTALL 8" BACK CURB.
E. INSTALL PERPENDICULAR PEDESTRIAN RAMP (MD STD. 655.11) WITH DETECTABLE WARNING SURFACE (MD STD 655.40)
F. INSTALL STANDARD 5" CONCRETE SIDEWALK.
G. USE EXISTING HANDHOLE
H. USE EXISTING CONDUIT.
J. USE EXISTING CABINET.
K. INSTALL 24" STOP LINE.
L. INSTALL 12" PREFORMED PAVEMENT MARKINGS FOR CROSSWALK.
M. REMOVE 20' OF EXISTING PAVEMENT MARKINGS.

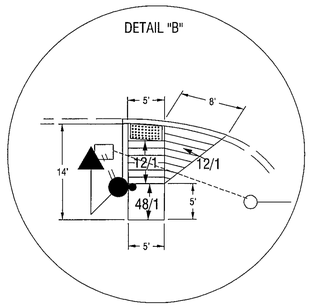

LEGEND OF UNDERGROUND AND OVERHEAD UTILITIES

AERIAL CABLE	A
ELECTRICAL	E
TELEPHONE	T
GAS	G
SEWER	S
WATER	W
CABLE TV	TV

GENERAL NOTES:

1. All underground utilities shown on these plans are schematic only and may not be complete. The contractor shall be responsible for notifying "MISS UTILITY" prior to construction so that all utilities may be located in the field. If the contractor perceives that a conflict between the utilities and the traffic signal will occur, the contractor shall notify the project engineer immediately so that the conflict may be resolved.
2. All Traffic Signal Foundations shall be installed at the Final Sidewalk or Curb grade for closed sections. Highest Roadway Profile Grade for open sections, to meet clearances as specified in MD 816.03, MD 818.01, MD 818.02, and MD 818.04 The contractor shall verify ultimate grades prior to the installation of all signal equipment.
3. Pushbuttons are to be located so that they can be activated by a person in a wheelchair reaching less than 18" from a 60"x 60" level landing area with a cross slope of less than or equal to 2%.
4. The 10' separation between pushbuttons is to be measured from face of pushbutton to face of pushbutton, not center to center of pole.
5. Pushbutton arrows are to be parallel to the crossing for which they are intended.
6. Location of Accessible Pedestrian signal pushbuttons must meet location requirements Of MUTCD Sec. 4E.09 and Fig. 4E.2 and the NCHRP publication, Accessible Pedestrian Signals: Guide to Best Practice. If not met, the Contractor is to stop work on pushbutton locations until a design Waiver is obtained, approved by the Director, Office of Traffic and Safety.
7. The contractor shall remove all unused wiring.

APPROVALS	
TEAM LEADER	ORIGINAL ON FILE
ASST. DIV. CHIEF	
DIVISION CHIEF	
OFFICE DIRECTOR	

REVISIONS			
F	INSTALL PEDESTRIAN MOVEMENT TIMS L131 ON SOUTH LEG, APSCPS		
CONTRACT X060159S		9/22/2011	
E	SIGNAL MODIFICATION DUE TO WIDENING OF EAST LEG OF INTERSECTION		
7-1-2008	SHA NO. BW BW699M82		
TZ			
D	CONSTRUCT FOURTH LEG OF THE INTERSECTION		
APRIL 2007	SHA NO. BW996M82		

FILE PATH: signal_pl.dgn
DATE: Tuesday, September 27, 2011

SHA

STATE OF MARYLAND
DEPARTMENT OF TRANSPORTATION
STATE HIGHWAY ADMINISTRATION

OFFICE OF TRAFFIC & SAFETY
TRAFFIC ENGINEERING DESIGN DIVISION

TRAFFIC SIGNAL PLAN

MD 322 AND MARLBORO AVE. (EASTON, MARYLAND)

SCALE 1" = 20'	DATE 7-27-06	CONTRACT NO.	
DESIGNED BY D. DICKERSON		COUNTY	TALBOT
DRAWN BY D. DODA		LOGMILE	2032203.29
CHECKED BY		T.I.M.S. NO.	I-998
F.A.P. NO.		TOD NO.	
DRAWING NO. 3388 F		SHEET NO. 1 OF 2	