DRILL HOLES

BORDER REV: DATE: June 1, 2004

DRILL HOLES

DRILL HOLES

PROJECT DESCRIPTION

I. GENERAL

This project involves the installation of a battery backup system and meter pedestal for the existing Traffic Control signal at the intersection of US 1 Southbound and MD 32 Southbound Off Ramp in Howard County. The existing signal heads shall be replaced with LED signal heads. US 1 Southbound is assumed to run in a north-south direction.

II. INTERSECTION OPERATION

1. The existing full-traffic-actuated, eight-phase controller with all necessary equipment housed in a NEMA size "6" base-mounted cabinet shall be utilized at this intersection.

2. A new NEMA size "5" base-mounted cabinet with battery back-up shall be installed at this intersection.

III. SPECIAL NOTES

1. All controller cabinet wiring will be performed by the S.H.A. Signal Shop Contact Mr. Ed Rodenhizer ,at (410) 787-7652 seventy-two hours in advance of intended work.

The contact persons for District #7 are as follows:

Mr. John Concannon
Assistant District Engineer - Traffic
Phone: (310) 624-8141

Mr. Ray Johnson
Assistant District Engineer - Maintenance
Phone: (310) 624-8106

Ms. Andrea Abend
District Engineer - Utility
Phone: (301) 624-8115

Mr. Richard L. Daff, Sr.
Chief, Traffic Operations Division
Phone: (410) 787-7630

Mr. Ed Rodenhizer
Signal Shop
410-787-7652

The power company representative is:

Baltimore Gas and Electric
7317 Parkway Drive South
Hanover, MD 21076
410-850-4620

EQUIPMENT LIST

A. EQUIPMENT TO BE SUPPLIED BY S.H.A..

THERE IS NO EQUIPMENT TO BE SUPPLIED BY THE SHA.

B. EQUIPMENT TO BE FURNISHED AND INSTALLED BY THE CONTRACTOR

ITEM NO.	DESCRIPTION	QUANTITY	
1001	Maintenance of traffic per assignment.	1	EA
2002	Test Pit Excavation	2	C.Y.
8022	Remove and dispose of existing material and equipment per assignment.	1	EA
8036	Schedule 80 rigid PVC conduit up tp 4" - trenched.	65	L.F.
8044	Metered service pedestal embedded.	1	EA
8046	Electrical cable 1-conductor No. 4 AWG THHN/THWN.	40	L.F.
8058	Electrical cable - 7 conductor (No. 14 AWG).	20	L.F.
8059	Electrical cable - 2 conductor (No. 12 AWG) TC.	805	L.F.
8074A	Clary Universal Power Supply with NEMA size 5 cabinet.	1	EA

PHASE CHART

THERE IS NO PHASE CHANGE FOR THIS PROJECT

WIRING DIAGRAM

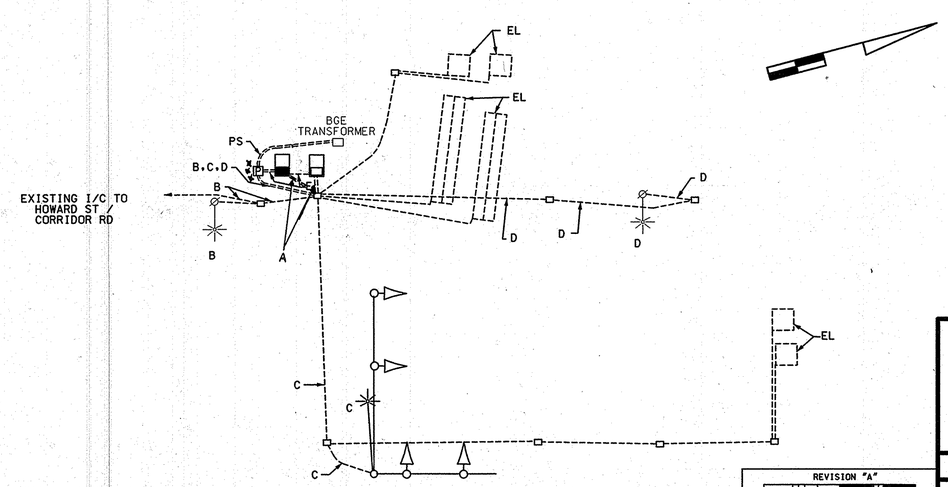

WIRING KEY

A - 7-CONDUCTOR ELECTRICAL CABLE (NO. 14 A.W.G) FOR ALARM

B, C, D - 2-CONDUCTOR TRAY CABLE (NO. 12 A.W.G)

E - 3-1 CONDUCTOR ELECTRICAL CABLE (NO. 4 A.W.G.)

EL - LOOP WIRE (NO. 14 A.W.G.) EXISTING

PS - PROPOSED UNDERGROUND SERVICE TO BE INSTALLED BY BGE

+ - GROUND ROD

SHA NO:HO407A53/B53/C53
SHA NO:BW602M84
TOD NO:AX142-09
MD32,US1,M103,MD108,MD175

REVISION "A"

STREET TRAFFIC STUDIES, LTD.
400 Crain Hwy.,NW.
Glen Burnie,MD 21061
Ph (410) 590-5500
Fax (410) 590-6637

5353aGI.dgn T-103

PLOTTED: $DATETIME$
FILE: $FILE$

SHA

STATE OF MARYLAND
DEPARTMENT OF TRANSPORTATION
STATE HIGHWAY ADMINISTRATION

US 1 S/B & MD 32 S/B
South Ramp
SAVAGE, MARYLAND

GENERAL INFORMATION SHEET

SCALE NONE DATE 8/10/07 CONTRACT NO. AX1425185

DESIGNED BY JWA COUNTY HOWARD
DRAWN BY RC LOGMILE 13000102.69
CHECKED BY TIMS NO. 1544
F.A.P. NO. TOD NO.

TS NO. 4607 DRAWING NO. 2 OF 2 SHEET NO. OF

...\5000's\5353\5353A\5353aGI.dgn 8/10/2007 11:22:26 AM