DIMENSION DIAGRAM

SCALE: 1 IN. = 10 FT.

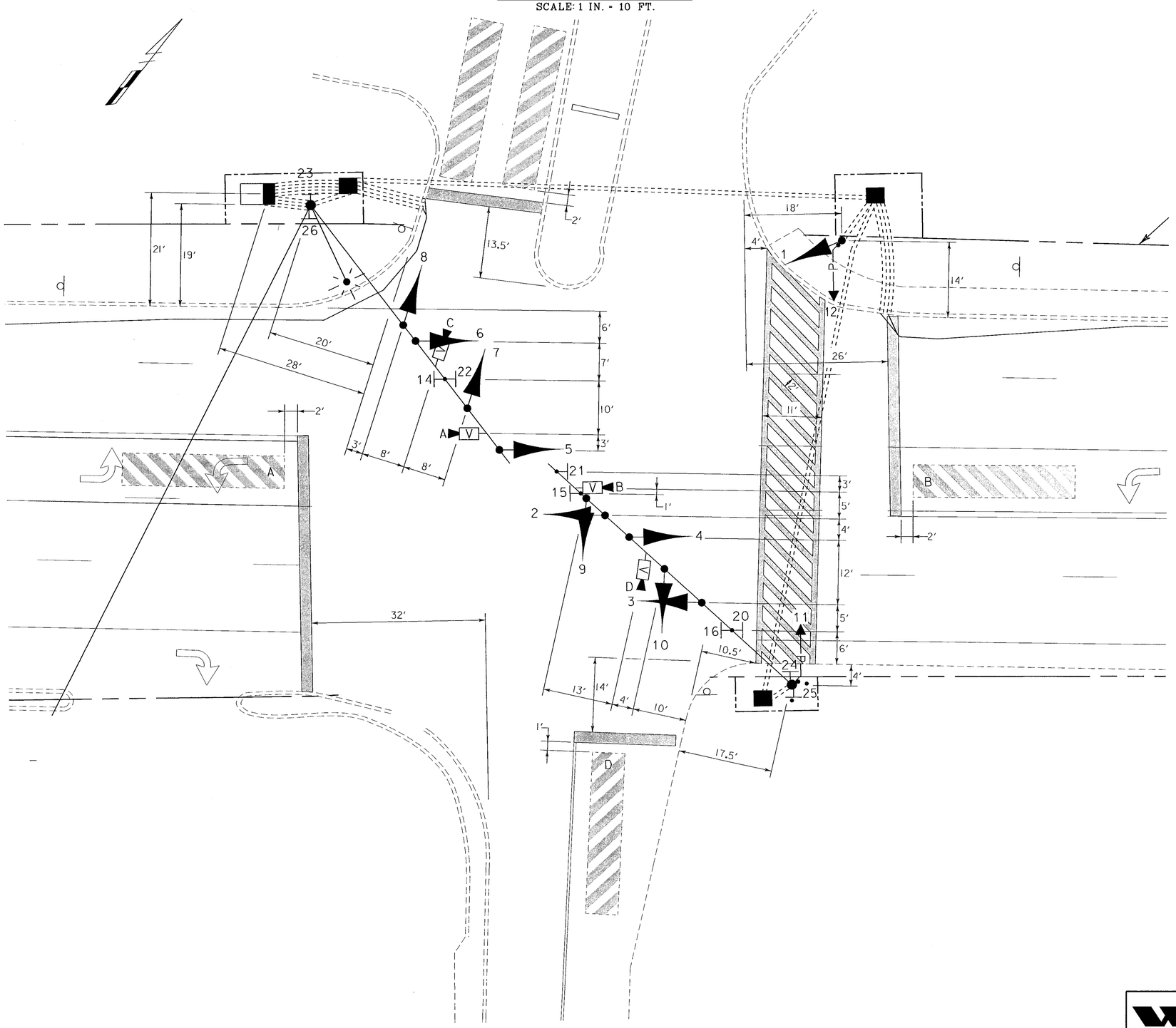

STEEL BOLLARD

SCALE: 1 IN. = 5 FT.

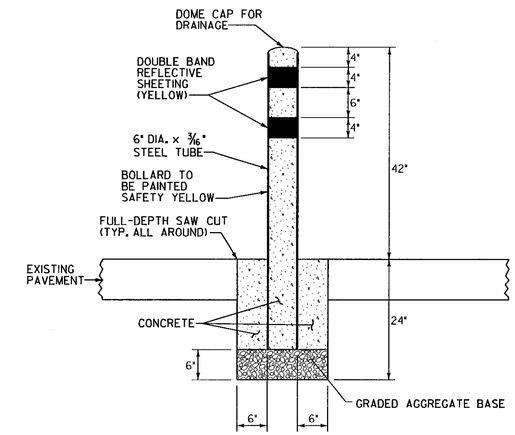

STEEL BOLLARD DIMENSION DIAGRAM

SCALE: 1 IN. = 5 FT.

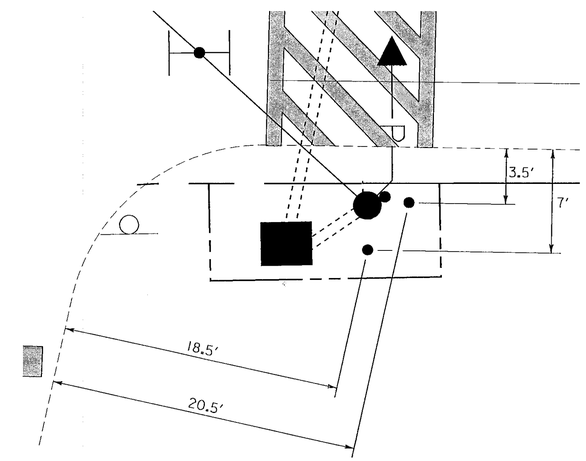

WR&A
Whitman, Requardt and Associates, LLP
801 South Caroline Street
Baltimore, Maryland 21231
(410) 235-3450

MARYLAND DOT - STATE HIGHWAY ADMINISTRATION

Office of Traffic & Safety

TRAFFIC ENGINEERING DESIGN DIVISION

GENERAL INFORMATION SHEET

U.S. 1 (WASHINGTON BLVD) AND LOUDON AVENUE

DRAWN BY:	S. BLOSS	F.A.P. NO.		TS NO. 4289	SHEET NO.
CHECKED BY:	N. LEARY	S.H.A. NO.	AT3585185		
SCALE:	AS SHOWN	COUNTY:	HOWARD	T.I.M.S. NO. F602	2 OF 3
DATE:	5/18/2004	LOG MILE:	13000108.69		

M:\20008\usl&loudon\f602gd02.dgn