F H W A REGION NO.	STATE	FED. AID PROJ. NO.	SHEET NO.	TOTAL SHEETS
3	MD	SEE TITLE SHEET	421.1	529

MD 108 IS ASSUMED TO RUN IN A EAST/WEST DIRECTION.

Construction Details

A. Install microloop probe set with a 500 ft. lead-in cable as shown.
B. Use existing handhole.
C. Use existing conduit.
D. Cap and abandon existing conduit.
E. Install 6 ft. x 30 ft. quadruple loop detector (3-6-3) turns) encased in flexible tubing.
F. Remove / grind existing pavement marking.
G. Install signal head.
H. Remove cover from signal heads and overhead signs.
J. Install overhead sign.
K. Remove existing span wire, attached overhead signs, signal heads and associated wiring.
L. Remove existing steel pole, foundation, street lighting arm & luminaire.
M. Install 1 in. liquid tight flexible, non-metallic conduit for detector wire sleeve.
N. Install 24 in. white thermoplastic pavement marking.
O. Abondon existing loop detector.
P. Rotate existing lighting arm over mast arm as shown.

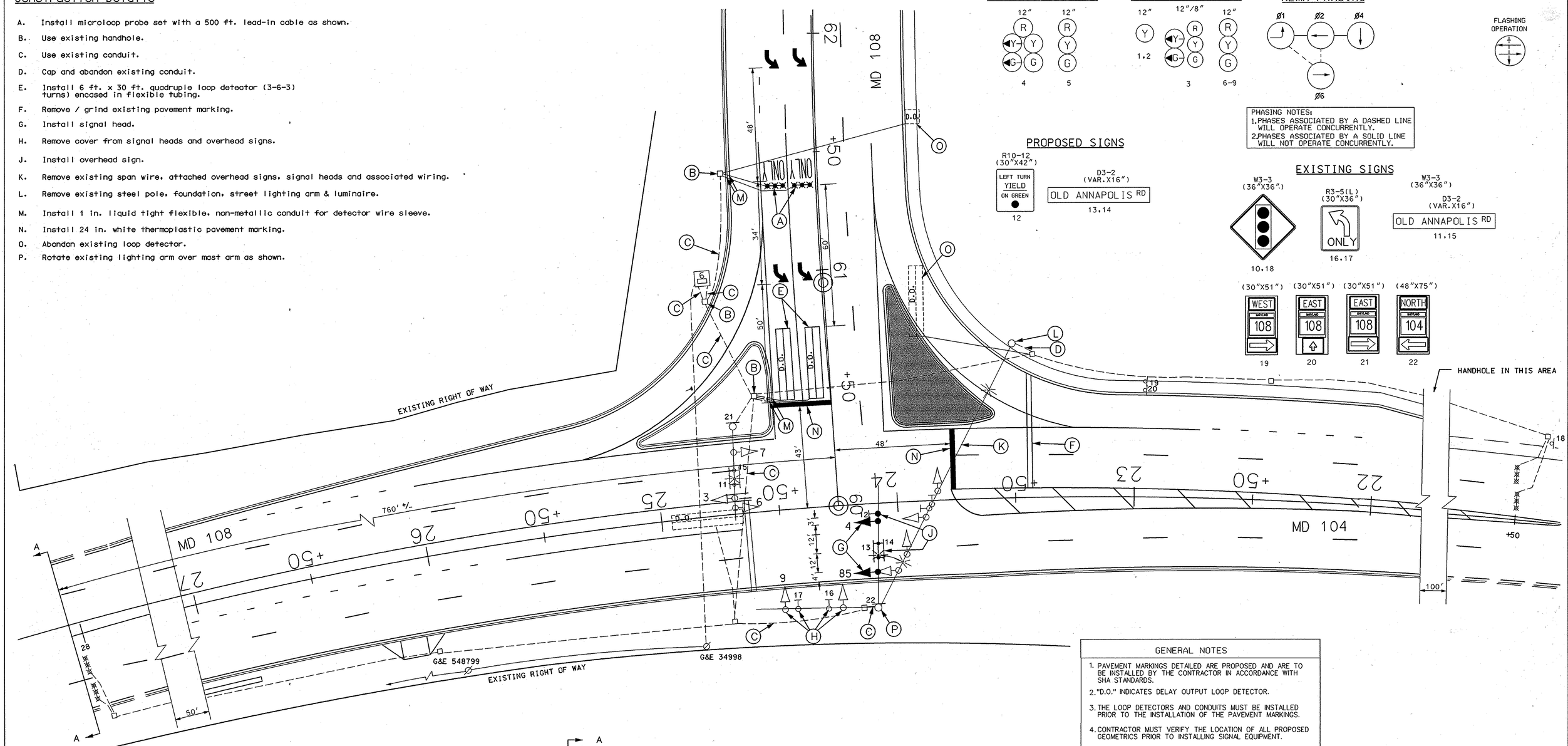

GENERAL NOTES

1. PAVEMENT MARKINGS DETAILED ARE PROPOSED AND ARE TO BE INSTALLED BY THE CONTRACTOR IN ACCORDANCE WITH SHA STANDARDS.
2. "D.O." INDICATES DELAY OUTPUT LOOP DETECTOR.
3. THE LOOP DETECTORS AND CONDUITS MUST BE INSTALLED PRIOR TO THE INSTALLATION OF THE PAVEMENT MARKINGS.
4. CONTRACTOR MUST VERIFY THE LOCATION OF ALL PROPOSED GEOMETRICS PRIOR TO INSTALLING SIGNAL EQUIPMENT.
5. ALL PROPOSED TRAFFIC SIGNAL EQUIPMENT SHALL BE INSTALLED TO FINAL GRADE.
6. REFER TO PAVEMENT MARKING PLANS FOR ADDITIONAL SIGNING AND PAVEMENT MARKINGS.

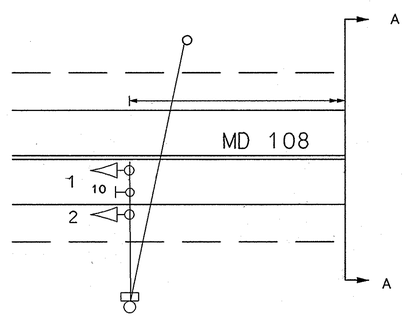

UTILITY LEGEND

T	T	TELEPHONE CABLES
G	G	GAS MAIN
W	W	WATER MAIN
S	S	SEWER MAIN
E	E	ELECTRIC CABLES
A	A	AERIAL CABLES
BC		BURIED CABLE
SD		STORM DRAIN

GEOMETRIC LEGEND

EXISTING GEOMETRICS
PROPOSED GEOMETRICS

SIG-10 | SIGNAL #5 ULTIMATE

REVISIONS

9 REVISION NO. 9, 4/29/98 REPLACEMENT SHEET
DMP DC1 BRL TH 10/96
© RECONSTRUCT SIGNAL SHA PROJECT NO. HO-661-701-770
LSC DC1

APPROVALS

ASST. DIVISION CHIEF, TEDD
ASST. DISTRICT ENGINEER, TRAFFIC
CHIEF, TRAFFIC ENGINEERING DESIGN DIVISION
DIRECTOR, OFFICE OF TRAFFIC & SAFETY
ORIGINALS ON FILE

DCI CONSULTING ENGINEERS COLUMBIA, MARYLAND

MARYLAND DOT - STATE HIGHWAY ADMINISTRATION
Office of Traffic & Safety
TRAFFIC ENGINEERING DESIGN DIVISION
MD 108 @ MD 104

DATE 3/15/98

DRAWN BY:	J. GORDON	F.A.P. NO.	SEE TITLE SHEET	PLAN SHEET NO.:	SHEET NO.
CHECK BY:	D. ZAFIRIS	S.H.A. NO.	HO-661-502-770	1589C	421.1 OF 529
SCALE:	1"=20'	COUNTY	HOWARD		