F.H.W.A. REGION NO.	STATE	FED. AID PROJ. NO.	SHEET NO.	TOTAL SHEETS
3	MD	SEE TITLE SHEET	419	529

Construction Details

A. Remove existing sign from span wire.

B. Remove existing strain pole.

9 ~~C. Install proposed sign on existing span wire.~~

9 ~~D. Install 12 in. X 30 ft. steel strain pole and a 20 ft. lighting arm with 250 watt HPS lamp and luminaire. (Note: one 3 in. PVC schedule 40 conduit Bend and Four - 1¼ in. x 90 in. anchor bolts).~~

9 ~~E. Install electrical handhole.~~

9 ~~F. Install 6 ft. x 30 ft. quadrulpe loop detector (3,6-3 turns) encased in flexible tubing.~~

9 ~~G. Install 6 ft. x 6 ft. loop detector (4 turns) encased in flexible tubing.~~

9 ~~H. Install microloop probe set with 1000 ft lead-in.~~

9 ~~J. Install 24 in. permanent preformed pavement marking tape stop line.~~

9 ~~K. Install 1 in. liquid tight flexible non-metallic conduit for detector wire sleeve.~~

L. Abondon existing conduit.

9 ~~M. Install 2 in. PVC schedule 40 electrical conduit - trenched~~

N. Abondon existing loop detector.

9 ~~O. Install 2 in. PVC schedule 80 electrical conduit, trenched prior to roadway surface base course.~~

9 ~~P. Install 3 in PVC schedule 40 electrical conduit - trenched.~~

9 ~~Q. Install 3/8 in. steel span wire, 1/4 in. tether wire, relocated signal heads, proposed and relocated signs as shown. (Note: Tether 5 section signal head and signs).~~

R. Abandon existing handhole.

S. Remove existing span wire and signs as shown.

T. Remove existing ground mounted signs.

U. Deleted.

9 ~~V. Relocate existing signal head as shown.~~

9 ~~W. Relocate existing signs as shown.~~

9 ~~X. Relocate existing ground mounted signs as shown.~~

9 ~~Y. Pickup existing conduit bend in pole foundation.~~

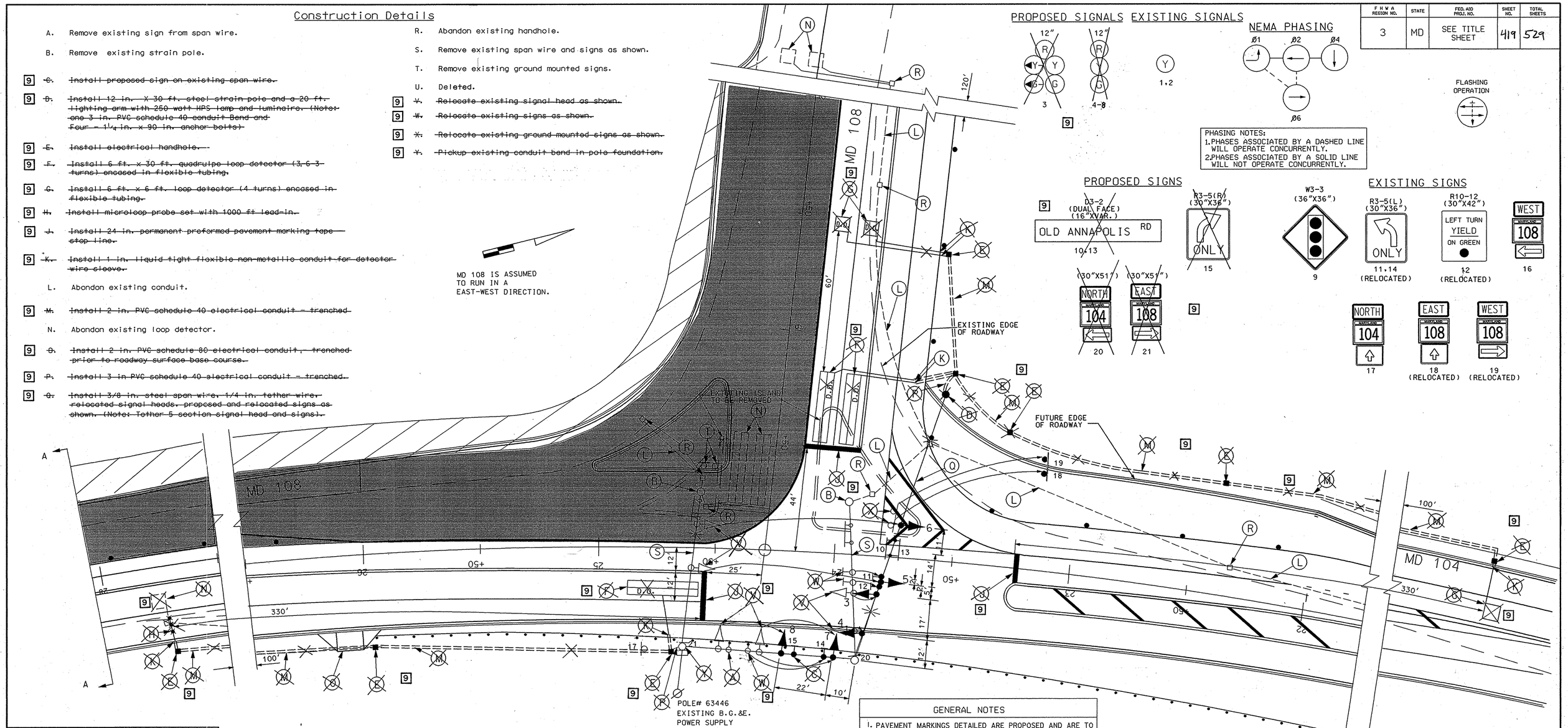

PROPOSED SIGNALS EXISTING SIGNALS

NEMA PHASING

FLASHING OPERATION

PHASING NOTES:
1. PHASES ASSOCIATED BY A DASHED LINE WILL OPERATE CONCURRENTLY.
2. PHASES ASSOCIATED BY A SOLID LINE WILL NOT OPERATE CONCURRENTLY.

PROPOSED SIGNS

EXISTING SIGNS

GENERAL NOTES

1. PAVEMENT MARKINGS DETAILED ARE PROPOSED AND ARE TO BE INSTALLED BY THE CONTRACTOR IN ACCORDANCE WITH SHA STANDARDS.
2. "D.O." INDICATES DELAY OUTPUT LOOP DETECTOR.
3. THE LOOP DETECTORS AND CONDUITS MUST BE INSTALLED PRIOR TO THE INSTALLATION OF THE PAVEMENT MARKINGS.
4. CONTRACTOR MUST VERIFY THE LOCATION OF ALL PROPOSED GEOMETRICS PRIOR TO INSTALLING SIGNAL EQUIPMENT.
5. ALL PROPOSED TRAFFIC SIGNAL EQUIPMENT SHALL BE INSTALLED TO FINAL GRADE.
6. REFER TO MAINTENANCE OF TRAFFIC PLANS FOR ADDITIONAL SIGNING AND PAVEMENT MARKINGS.

MOT LEGEND

- CHANNELIZING DEVICES
- TEMPORARY CONCRETE BARRIER
- BASE WIDENING

UTILITY LEGEND

T	TELEPHONE CABLES
G	GAS MAIN
W	WATER MAIN
S	SEWER MAIN
E	ELECTRIC CABLES
A	AERIAL CABLES
BC	BURIED CABLE
SD	STORM DRAIN

GEOMETRIC LEGEND

- EXISTING GEOMETRICS
- PROPOSED GEOMETRICS

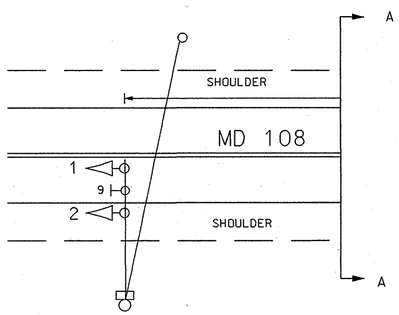

REVISIONS	APPROVALS
9 REDLINE NO.9 4/29/98	ASST. DIV. CHIEF, SIGNAL DESIGN SECTION
	ASST. DISTRICT ENGINEER, TRAFFIC
	CHIEF, TRAFFIC ENGINEERING DESIGN DIVISION
	DEPUTY CHIEF ENGINEER, OFFICE OF TRAFFIC

ORIGINAL ON FILE

DMP/DCI RAC BAL TH
© RECONSTRUCT SIGNAL SHA PROJECT NO. HO-661-701-770
LSC DCI

TGL CONSULTING ENGINEERS COLUMBIA, MARYLAND

MARYLAND DOT - STATE HIGHWAY ADMINISTRATION
Office of Traffic & Safety
TRAFFIC ENGINEERING DESIGN DIVISION

9

ORIGINAL DRAWN BY	R CICCHINI / J ALLEN	MD 108 AT MD 104	
DES. BY	S CHERNACK / D PETERS		
CHK. BY	Bruce Thompson 11-14-96	LOG MILE NO.	COUNTY: HOWARD
DATE: 10/96	F.A.P. NO. SEE TITLE SHEET	TS/FILE NO. 1589-C	SHEET NO. 419 OF 529
SCALE: 1"=20'	S.H.A. NO. HO-661-502-770		

SIG-8 TEMPORARY SIGNAL #4 PHASE ~~III~~ II

FILENAME:F:\PROJECTS\8580002\DGN\SIGNAL\phase3\SSGM4108ZIDH