F H W A REGION NO.	STATE	FED. AID PROJ. NO.	SHEET NO.	TOTAL SHEETS
3	MD		471B	542

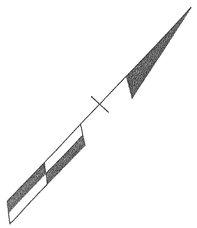

SIGNALS

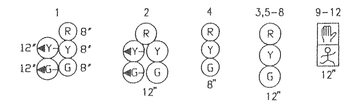

NEMA PHASING

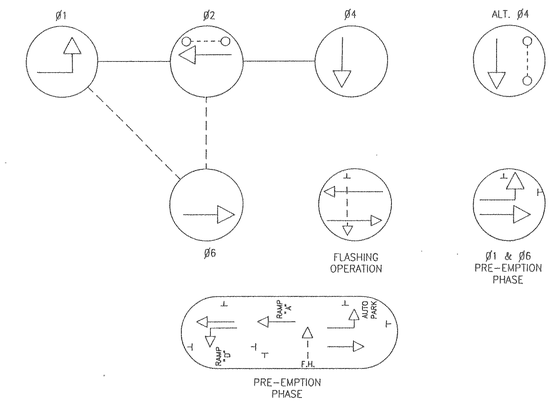

PHASING NOTES:
1. PHASES ASSOCIATED BY A SOLID LINE WILL NOT OPERATE CONCURRENTLY.
2. PHASES ASSOCIATED BY A DASHED LINE WILL OPERATE CONCURRENTLY.

SIGNS

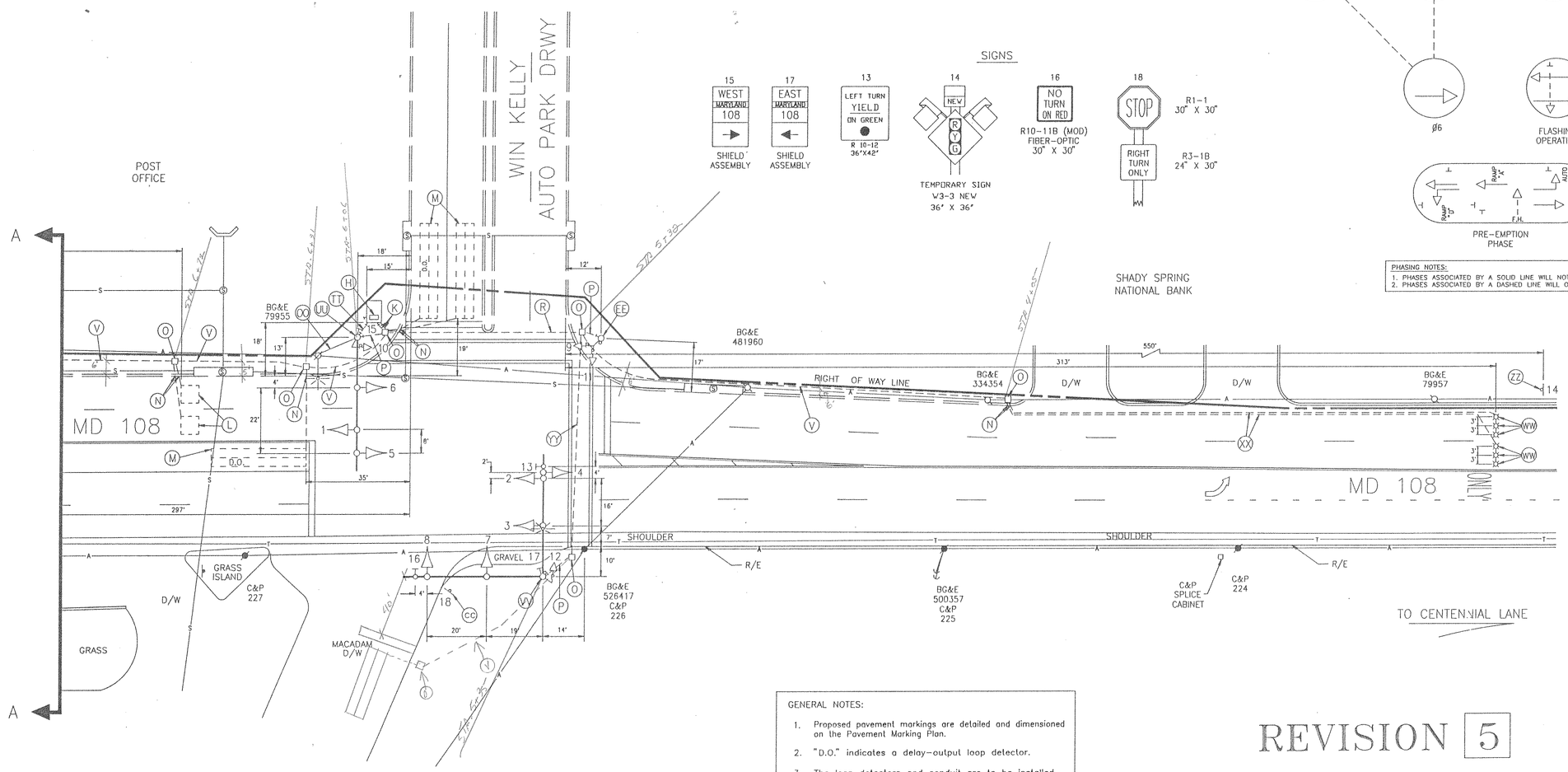

GENERAL NOTES:

1. Proposed pavement markings are detailed and dimensioned on the Pavement Marking Plan.
2. "D.O." indicates a delay-output loop detector.
3. The loop detectors and conduit are to be installed prior to the installation of the pavement markings.

REVISION 5

5- - 94

GEOMETRIC LEGEND

PROPOSED
EXISTING

LEGEND OF UNDERGROUND AND OVERHEAD UTILITIES

AERIAL CABLE —A—A—A
ELECTRIC —E—E—E
TELEPHONE —T—T—T
GAS —G—G—G
SEWER —S—S—S
WATER —W—W—W
CABLE TV —TV—TV—TV

STREET TRAFFIC STUDIES, LTD.
Gateway International
1302 Concourse Drive, Suite 104
Linthicum, Maryland 21090
(410) 859-3553
2404

REVISIONS

5 REVISED 6/10/94

APPROVALS

CHIEF, SIGNAL DESIGN SECTION 5/23/94
ASST. DISTRICT ENGINEER, TRAFFIC
CHIEF, TRAFFIC ENGINEERING DESIGN DIVISION
DIRECTOR, OFFICE OF TRAFFIC AND SAFETY 5/24/94

MDOT – STATE HIGHWAY ADMINISTRATION
Office of Traffic and Safety
TRAFFIC ENGINEERING DESIGN DIVISION

SIGNAL NUMBER:
LOG MILE: 13010803.70

DRAWN BY: S.R.BARANOWSKI (FOR STS)
DES. BY: R.R.ZACHERL (FOR STS)
CHK. BY:

MD 108 AND WIN KELLY AUTO PARK DRWY
COUNTY HOWARD

DATE: 5-11-94
SCALE: 1"=20'
F.A.P. NO.
S.H.A. NO.
TS/STD. NO. 3409
SHEET NO. 471B OF 542