MD 108 IS ASSUMED TO RUN IN A EAST/WEST DIRECTION.

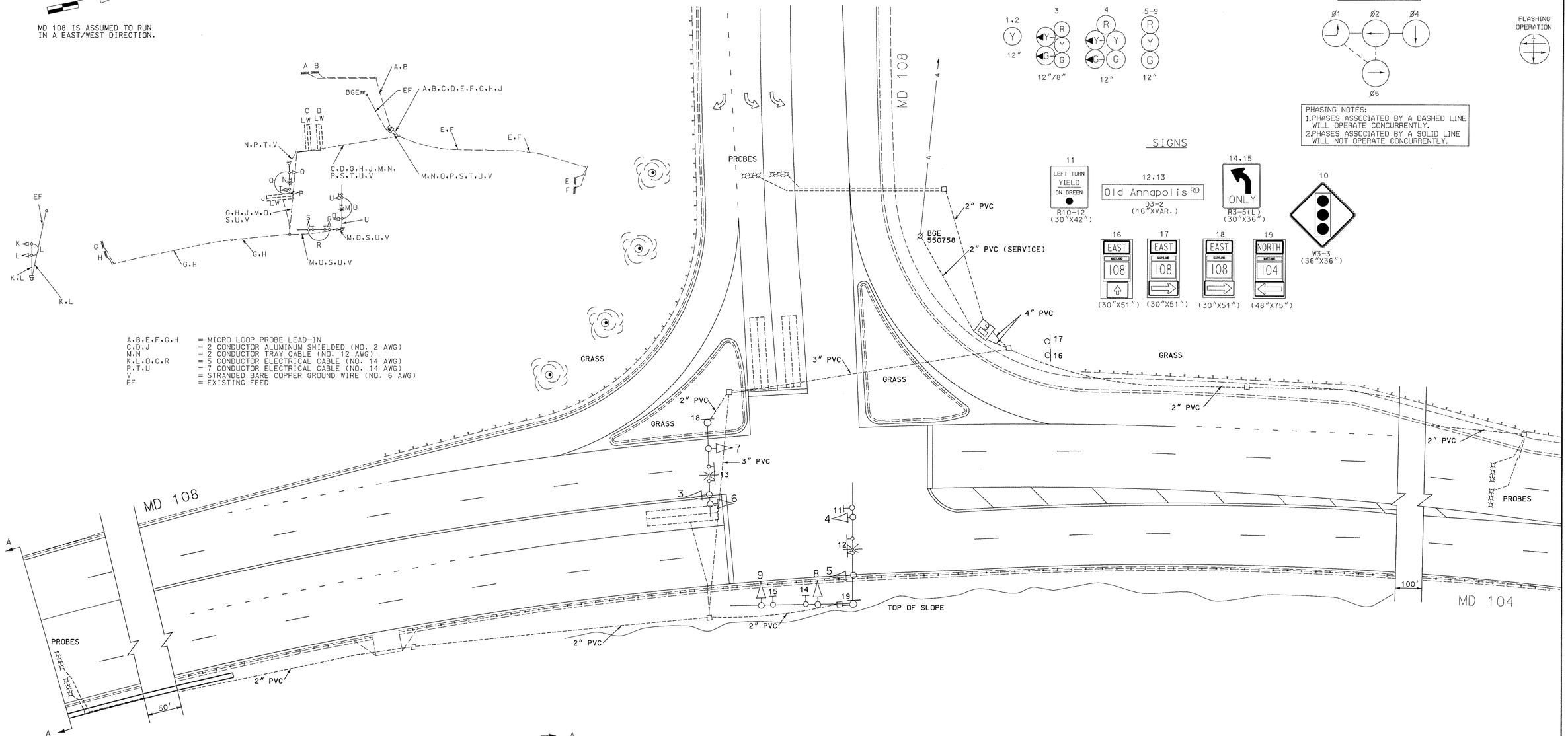

A,B,E,F,G,H = MICRO LOOP PROBE LEAD-IN
C,D,J = 2 CONDUCTOR ALUMINUM SHIELDED (NO. 2 AWG)
M,N = 2 CONDUCTOR TRAY CABLE (NO. 12 AWG)
K,L,O,Q,R = 5 CONDUCTOR ELECTRICAL CABLE (NO. 14 AWG)
P,T,U = 7 CONDUCTOR ELECTRICAL CABLE (NO. 14 AWG)
V = STRANDED BARE COPPER GROUND WIRE (NO. 6 AWG)
EF = EXISTING FEED

SIGNALS

NEMA PHASING

FLASHING OPERATION

PHASING NOTES:
1. PHASES ASSOCIATED BY A DASHED LINE WILL OPERATE CONCURRENTLY.
2. PHASES ASSOCIATED BY A SOLID LINE WILL NOT OPERATE CONCURRENTLY.

SIGNS

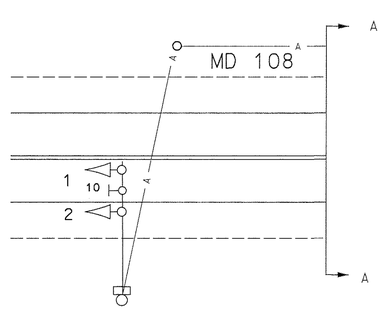

20 0 20 40
SCALE: 1" = 20'

GEOMETRIC LEGEND

EXISTING
PROPOSED

UTILITY LEGEND

G — G	GAS MAIN
W — W	WATER MAIN
S — S	SEWER MAIN
E — E	ELECTRIC CABLES
A — A	AERIAL CABLES
T — T	TELEPHONE CABLES

SABRA, WANG & ASSOCIATES, INC.
9881 BROKEN LAND PARKWAY
SUITE 105
COLUMBIA, MD 21046

REVISIONS			
D	AS BUILT HO-661-701-770	12/98	AF
C	RECONSTRUCT SIGNAL SHA PROJECT NO. HO-661-701-770	10/96	LSC DG1

APPROVALS
ASST. TRAFFIC ENGINEERING DESIGN DIVISION
ASST. DISTRICT ENGINEER, TRAFFIC
CHIEF, TRAFFIC ENGINEERING DESIGN DIVISION
DIRECTOR, TRAFFIC & SAFETY

MARYLAND DOT - STATE HIGHWAY ADMINISTRATION
Office of Traffic & Safety
TRAFFIC ENGINEERING DESIGN DIVISION

TRAFFIC SIGNALIZATION PLAN

MD 108 AT MD 104

DRAWN BY:	J. GORDON	F.A.P. NO.	SEE TITLE SHEET	TS NO. 15890 D	SHEET NO.
CHECKED BY:	D. ZAFIRIS	S.H.A. NO.	HO-661-502-770		
SCALE:	1"=20'	COUNTY:	HOWARD	T.I.M.S. NO.	OF
DATE:	10/96	LOG MILE:			