MD 32 IS ASSUMED TO RUN
IN A NORTH/SOUTH DIRECTION

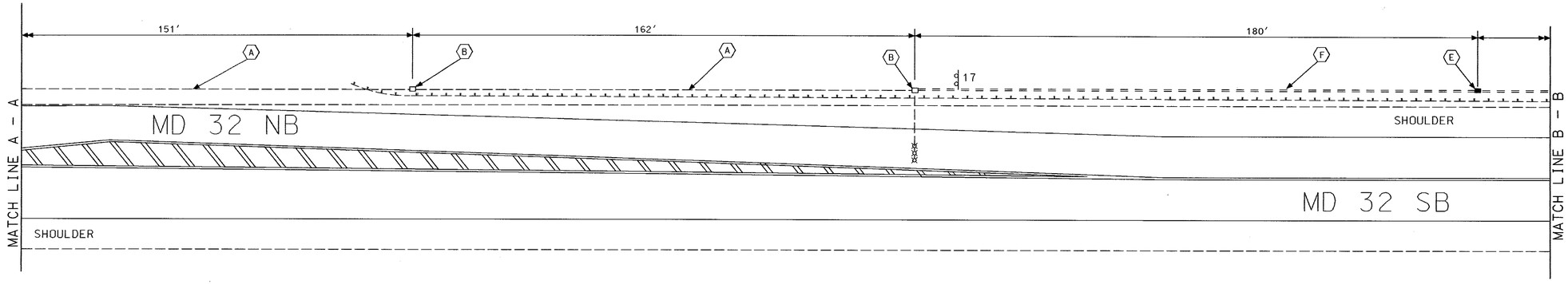

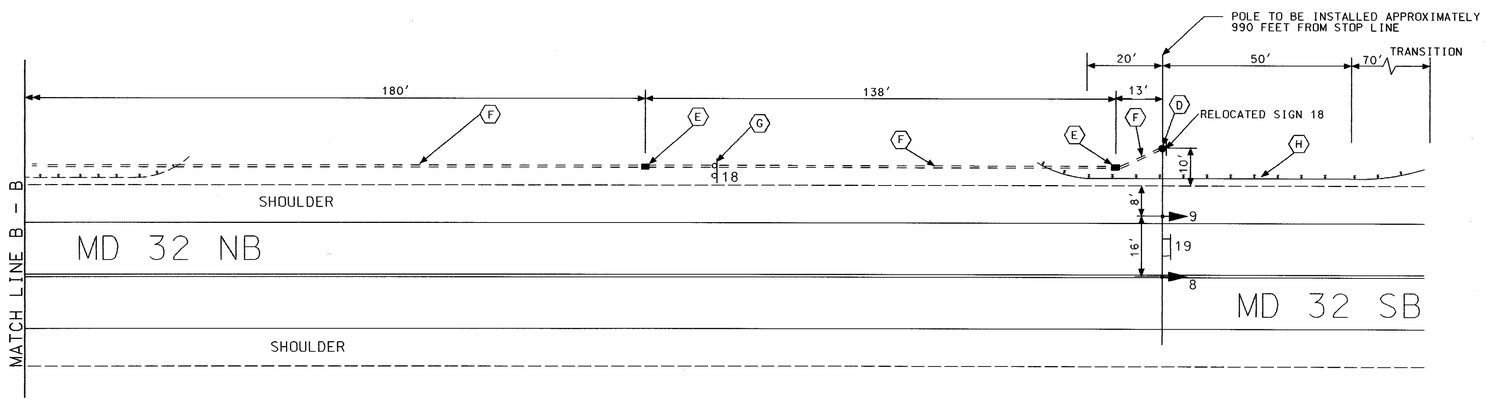

NOTE:
HANDHOLES SHALL NOT BE INSTALLED
MORE THAN 200 FT. APART.

UTILITY LEGEND	
T	TELEPHONE CABLES
G	GAS MAIN
W	WATER MAIN
S	SEWER MAIN
E	ELECTRIC CABLES
A	AERIAL CABLES
BC	BURIED CABLE
SD	STORM DRAIN

GEOMETRIC LEGEND	
	EXISTING GEOMETRICS
	PROPOSED GEOMETRICS

H:\P/TRANS/9612554/NEW/09735C04.DGN

DGI
CONSULTING ENGINEERS
COLUMBIA, MARYLAND

REVISIONS

(B) 11/00 DESIGN SIGNAL AHEAD
HIB FOR NB MD 32
SHA. NO. 1005785

ME/DGI

APPROVALS

ASST. TRAFFIC ENGINEERING DESIGN DIVISION

ASST. DISTRICT ENGINEER, TRAFFIC

CHIEF, TRAFFIC ENGINEERING DESIGN DIVISION

DIRECTOR, TRAFFIC & SAFETY

ORIGINAL ON FILE

MARYLAND DOT - STATE HIGHWAY ADMINISTRATION
Office of Traffic & Safety
TRAFFIC ENGINEERING DESIGN DIVISION

HAZARDOUS IDENTIFICATION BEACON (HIB) PLAN

MD. 32 AND TEN OAKS ROAD

DRAWN BY:	T. ZAYDEL	F.A.P. NO.	N/A	TS NO.	SHEET NO.
CHECKED BY:	K. SCHMIDT	S.H.A. NO.	AW 12.5(3), AW 12.5(8), AW 12.5(A)		
SCALE:	1"=20'	COUNTY:	HOWARD	T.I.M.S. NO.	
DATE:	5/6/97	LOG MILE:	13.00 32 15.71	D-973	2 OF 2