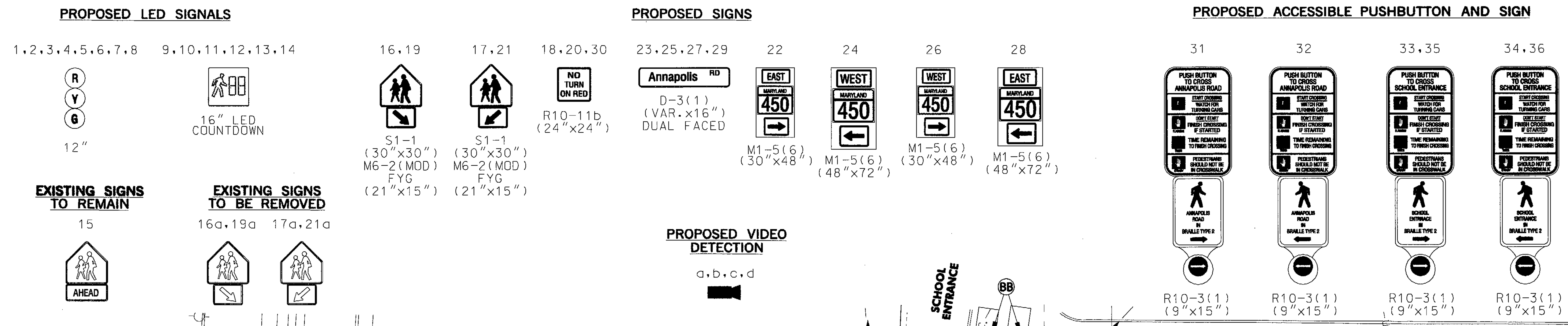

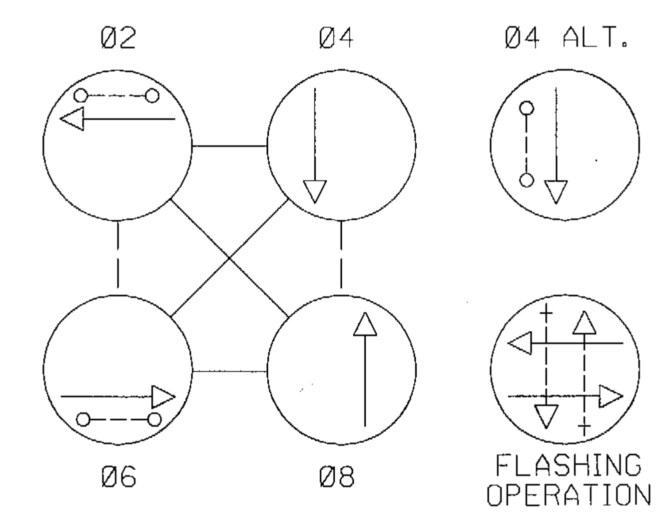

NOTE:
PHASES ASSOCIATED BY A DASHED LINE MAY/WILL OPERATE CONCURRENTLY.
PHASES ASSOCIATED BY A SOLID LINE WILL NOT OPERATE CONCURRENTLY.

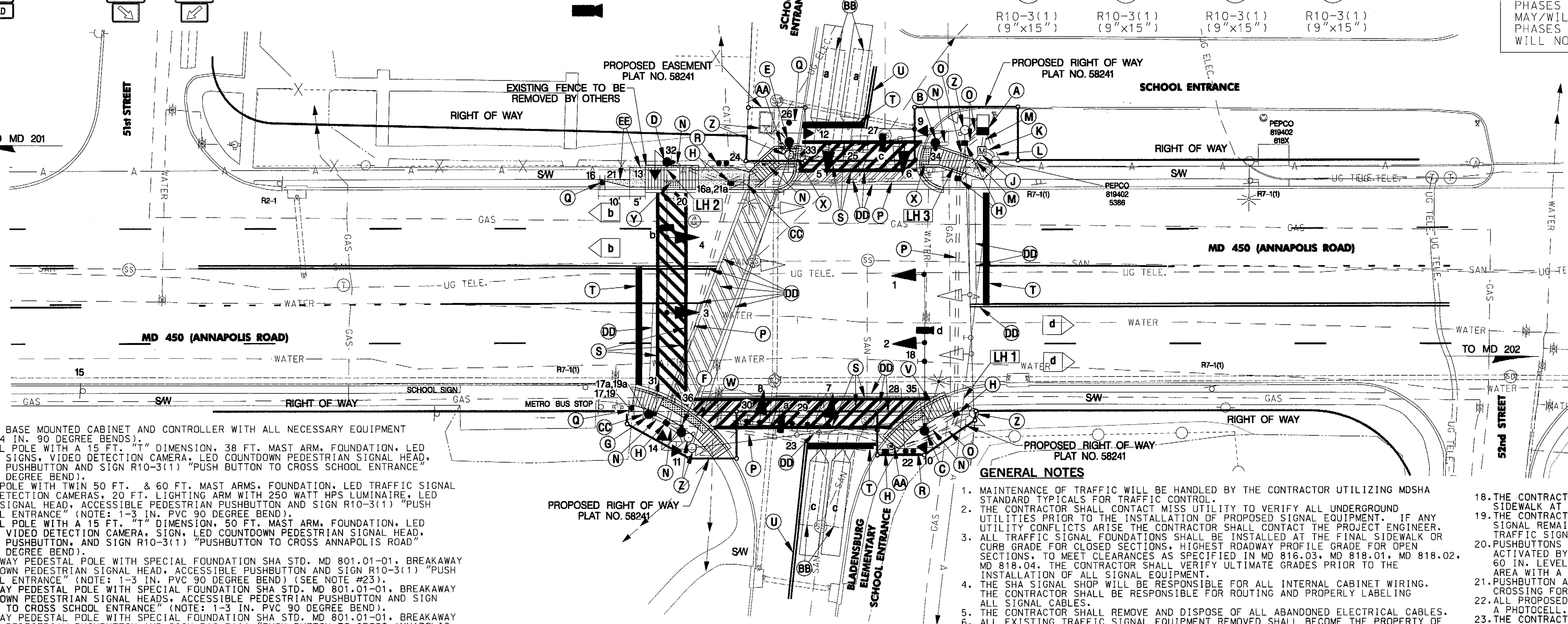

LINE HEIGHTS (LH) 1	
COMMUNICATION 1	- 22'-0"
COMMUNICATION 2	- 23'-10"
COMMUNICATION 3	- 23'-0"
SPAN WIRE	- 22'-6'
GUY WIRE	- 25'+
PRIMARY	- 35'+

LINE HEIGHTS (LH) 2	
COMMUNICATION 1	- 18'-0"
COMMUNICATION 2	- 20'-0"
COMMUNICATION 3	- 21'-6"
SECONDARY	- 29'-6"
PRIMARY	- 35' +

LINE HEIGHTS (LH) 3	
COMMUNICATION 1	- 18'-10"
COMMUNICATION 2	- 19'-6"
COMMUNICATION 3	- 21'-2"
SECONDARY	- 25'
PRIMARY	- 35' +

CONSTRUCTION DETAILS

A. INSTALL NEMA SIZE "6" BASE MOUNTED CABINET AND CONTROLLER WITH ALL NECESSARY EQUIPMENT (NOTE: 2-2 IN. AND 2-4 IN. 90 DEGREE BENDS).
B. INSTALL 16.5 FT. STEEL POLE WITH A 15 FT. "T" DIMENSION, 38 FT. MAST ARM, FOUNDATION, LED TRAFFIC SIGNAL HEADS, SIGNS, VIDEO DETECTION CAMERA, LED COUNTDOWN PEDESTRIAN SIGNAL HEAD, ACCESSIBLE PEDESTRIAN PUSHBUTTON AND SIGN R10-3(1) "PUSH BUTTON TO CROSS SCHOOL ENTRANCE" (NOTE: 1-3 IN. PVC 90 DEGREE BEND).
C. INSTALL 27 FT. STEEL POLE WITH TWIN 50 FT. & 60 FT. MAST ARMS, FOUNDATION, LED TRAFFIC SIGNAL HEADS, SIGNS, VIDEO DETECTION CAMERAS, 20 FT. LIGHTING ARM WITH 250 WATT HPS LUMINAIRE, LED COUNTDOWN PEDESTRIAN SIGNAL HEAD, ACCESSIBLE PEDESTRIAN PUSHBUTTON AND SIGN R10-3(1) "PUSH BUTTON TO CROSS SCHOOL ENTRANCE" (NOTE: 1-3 IN. PVC 90 DEGREE BEND).
D. INSTALL 16.5 FT. STEEL POLE WITH A 15 FT. "T" DIMENSION, 50 FT. MAST ARM, FOUNDATION, LED TRAFFIC SIGNAL HEADS, VIDEO DETECTION CAMERA, SIGN, LED COUNTDOWN PEDESTRIAN SIGNAL HEAD, ACCESSIBLE PEDESTRIAN PUSHBUTTON, AND SIGN R10-3(1) "PUSHBUTTON TO CROSS ANNAPOLIS ROAD" (NOTE: 1-3 IN. PVC 90 DEGREE BEND).
E. INSTALL 10 FT. BREAKAWAY PEDESTAL POLE WITH SPECIAL FOUNDATION SHA STD. MD 801.01-01, BREAKAWAY COUPLINGS, LED COUNTDOWN PEDESTRIAN SIGNAL HEAD, ACCESSIBLE PUSHBUTTON AND SIGN R10-3(1) "PUSH BUTTON TO CROSS SCHOOL ENTRANCE" (NOTE: 1-3 IN. PVC 90 DEGREE BEND) (SEE NOTE #23).
F. INSTALL 10 FT. BREAKWAY PEDESTAL POLE WITH SPECIAL FOUNDATION SHA STD. MD 801.01-01, BREAKAWAY COUPLINGS, LED COUNTDOWN PEDESTRIAN SIGNAL HEADS, ACCESSIBLE PEDESTRIAN PUSHBUTTON AND SIGN R10-3(1) "PUSH BUTTON TO CROSS SCHOOL ENTRANCE" (NOTE: 1-3 IN. PVC 90 DEGREE BEND).
G. INSTALL 5 FT. BREAKAWAY PEDESTAL POLE WITH SPECIAL FOUNDATION SHA STD. MD 801.01-01, BREAKAWAY COUPLINGS, ACCESSIBLE PEDESTRIAN PUSHBUTTON AND SIGN R10-3(1) "PUSH BUTTON TO CROSS ANNAPOLIS ROAD" (NOTE: 1-3 IN. PVC 90 DEGREE BEND).
H. INSTALL ELECTRICAL HANDHOLE.
J. INSTALL METERED SERVICE PEDESTAL (NOTE: 3-2 IN. AND 1-4 IN. PVC 90 DEGREE BENDS WITH 3/4 IN. CONDUIT FOR GROUND WIRE).
K. INSTALL 4 IN. SCHEDULE 80 RIGID PVC ELECTRICAL CONDUIT (TRENCHED) - FOR PROPOSED UNDERGROUND POWER SERVICE. CAP AND MARK CONDUIT, AND LEAVE A 1 FT. STUB AT UTILITY POLE FOR USE BY OTHERS.
L. INSTALL 2 IN. SCHEDULE 80 RIGID PVC ELECTRICAL CONDUIT (TRENCHED) - FOR PROPOSED UNDERGROUND TELEPHONE SERVICE. CAP AND MARK CONDUIT, AND LEAVE A 1 FT. STUB WITH PULL STRING AT UTILITY POLE FOR USE BY OTHERS.
M. INSTALL 2 IN. SCHEDULE 80 RIGID PVC ELECTRICAL CONDUIT (TRENCHED).
N. INSTALL 3 IN. SCHEDULE 80 RIGID PVC ELECTRICAL CONDUIT (TRENCHED).
O. INSTALL 4 IN. SCHEDULE 80 RIGID PVC ELECTRICAL CONDUIT (TRENCHED).
P. INSTALL 4 IN. SCHEDULE 80 RIGID PVC ELECTRICAL CONDUIT (SLOTTED).
Q. INSTALL GROUND MOUNTED SIGN ON ONE 4 IN. x 6 IN. WOOD POST.
R. INSTALL GROUND MOUNTED SIGNS ON TWO 4 IN. x 6 IN. WOOD POSTS.
S. INSTALL 12 IN. HEAT APPLIED WHITE PERMANENT PREFORMED THERMOPLASTIC PAVEMENT MARKINGS FOR CROSSWALK.
T. INSTALL 24 IN. HEAT APPLIED WHITE PERMANENT PREFORMED THERMOPLASTIC PAVEMENT MARKINGS FOR STOPLINE.
U. INSTALL 5 IN. HEAT APPLIED DOUBLE YELLOW PERMANENT PREFORMED THERMOPLASTIC PAVEMENT MARKINGS (SEE NOTE 8).
V. REMOVE EXISTING SIDEWALK RAMP AND CONSTRUCT SHA STD. MD 655.12 SIDEWALK RAMP WITH DETECTABLE WARNING SURFACE SHA STD. MD 655.40.
W. REMOVE EXISTING SIDEWALK RAMP AND CONSTRUCT SHA STD. MD 655.12 SIDEWALK RAMP (16 FT. LEVEL LANDING AREA) WITH DETECTABLE WARNING SURFACE SHA STD. 655.40.
X. REMOVE EXISTING SIDEWALK RAMP AND CONSTRUCT SIDEWALK RAMP WITH DETECTABLE WARNING SURFACE SHA STD. MD 655.40 (SEE DETAIL THIS SHEET).
Y. REMOVE EXISTING SIDEWALK RAMP AND CONSTRUCT SHA STD. MD 655.12 SIDEWALK RAMP WITH DETECTABLE WARNING SURFACE SHA STD. MD 655.40.
Z. REMOVE AND DISPOSE OF EXISTING TRAFFIC SIGNAL EQUIPMENT. REMOVE FOUNDATION 12 IN. BELOW GRADE AND AND FILL WITH SELECT BACKFILL. CAP AND ABANDON ANY EXISTING CONDUIT.
AA. REMOVE EXISTING HANDHOLE AND FILL WITH SELECT BACKFILL. CAP AND ABANDON ANY EXISTING CONDUIT.
BB. ABANDON EXISTING LOOP DETECTOR.
CC. REMOVE EXISTING GROUND MOUNTED SIGN AND SUPPORT.
DD. REMOVE EXISTING PAVEMENT MARKINGS.
EE. CONSTRUCT 5 IN. CONCRETE SIDEWALK.

STV Incorporated
7125 Ambassador Road, Suite 200
Baltimore, MD 21244
www.stvinc.com

BY: guiliamc -

UTILITY LEGEND

—E—E—	ELECTRIC CABLES	—SD—SD—	STORM DRAIN
—A—A—	AERIAL CABLES	—G—G—	GAS MAIN
—T—T—	TELEPHONE CABLES	—W—W—	WATER MAIN
—F—F—	FIBER-OPTIC	—S—S—	SEWER MAIN

NE SIDEWALK RAMP DETAIL

(NOT TO SCALE)

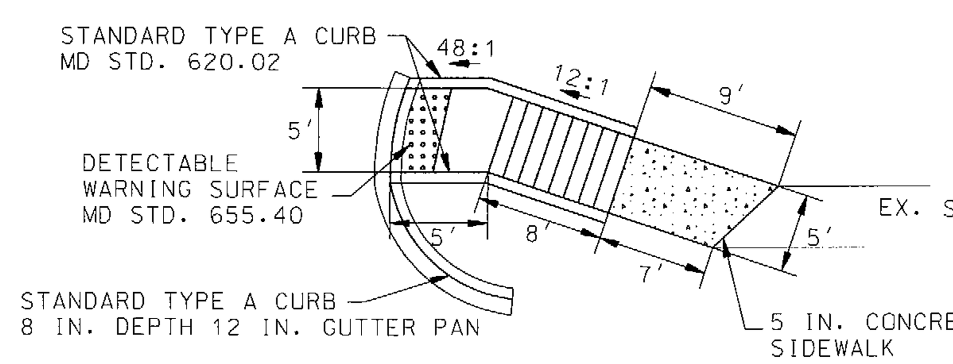

NW SIDEWALK RAMP DETAIL

(NOT TO SCALE)

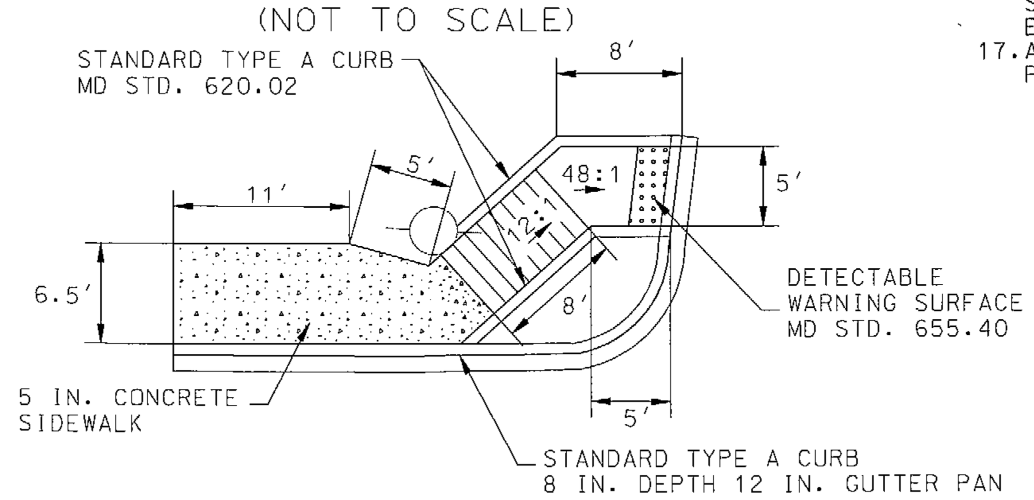

GENERAL NOTES

1. MAINTENANCE OF TRAFFIC WILL BE HANDLED BY THE CONTRACTOR UTILIZING MDSHA STANDARD TYPICALS FOR TRAFFIC CONTROL.
2. THE CONTRACTOR SHALL CONTACT MISS UTILITY TO VERIFY ALL UNDERGROUND UTILITIES PRIOR TO THE INSTALLATION OF PROPOSED SIGNAL EQUIPMENT. IF ANY UTILITY CONFLICTS ARISE THE CONTRACTOR SHALL CONTACT THE PROJECT ENGINEER.
3. ALL TRAFFIC SIGNAL FOUNDATIONS SHALL BE INSTALLED AT THE FINAL SIDEWALK OR CURB GRADE FOR CLOSED SECTIONS, HIGHEST ROADWAY PROFILE GRADE FOR OPEN SECTIONS, TO MEET CLEARANCES AS SPECIFIED IN MD 816.03, MD 818.01, MD 818.02, MD 818.04. THE CONTRACTOR SHALL VERIFY ULTIMATE GRADES PRIOR TO THE INSTALLATION OF ALL SIGNAL EQUIPMENT.
4. THE SHA SIGNAL SHOP WILL BE RESPONSIBLE FOR ALL INTERNAL CABINET WIRING. THE CONTRACTOR SHALL BE RESPONSIBLE FOR ROUTING AND PROPERLY LABELING ALL SIGNAL CABLES.
5. THE CONTRACTOR SHALL REMOVE AND DISPOSE OF ALL ABANDONED ELECTRICAL CABLES.
6. ALL EXISTING TRAFFIC SIGNAL EQUIPMENT REMOVED SHALL BECOME THE PROPERTY OF THE SIGNAL CONTRACTOR UPON COMPLETION OF THE SIGNAL MODIFICATION.
7. THE CONTRACTOR SHALL VERIFY THE PROPOSED POLE AND CABINET LOCATION(S) PRIOR TO INSTALLATION.
8. SEE GENERAL INFORMATION SHEET FOR PROPOSED TRAFFIC SIGNAL EQUIPMENT AND PAVEMENT MARKING LAYOUTS.
9. THE CONTRACTOR SHALL CENTER THE PROPOSED CROSSWALKS ON NEWLY CONSTRUCTED RAMPS.
10. ALL PAVEMENT MARKINGS SHALL BE INSTALLED IN ACCORDANCE WITH MDSHA STANDARDS.
11. THE CONTRACTOR SHALL REFER TO FIGURE 3B-17a OF THE 2006 MARYLAND M.U.T.C.D. FOR CROSSWALK PAVEMENT MARKING DETAIL.
12. VIDEO CAMERA LOCATION/ALIGNING SHALL BE COORDINATED WITH THE SHA ENGINEER.
13. LOCATION OF ACCESSIBLE PEDESTRIAN SIGNAL PUSHBUTTONS MUST MEET LOCATION REQUIREMENTS OF MUTCD SEC. 4E.09 AND FIG. 4E.2; AND THE NCHRP PUBLICATION, "ACCESSIBLE PEDESTRIAN SIGNALS: GUIDE TO BEST PRACTICE." IF NOT MET, THE CONTRACTOR IS TO STOP WORK ON PUSHBUTTON LOCATIONS UNTIL THE CONFLICT HAS BEEN RESOLVED. IF NEEDED, A DESIGN WAIVER SHALL BE OBTAINED, APPROVED BY THE DIRECTOR, OFFICE OF TRAFFIC AND SAFETY.
14. PUSHBUTTON IS TO BE LOCATED SO THAT A PEDESTRIAN IN A WHEELCHAIR LOCATED ON THE LEVEL LANDING AREA DOES NOT HAVE TO REACH MORE THAN 18 IN.
15. THE 10 FT. SEPARATION BETWEEN PUSHBUTTONS IS TO BE MEASURED FROM FACE OF PUSHBUTTON TO FACE OF PUSHBUTTON, NOT CENTER OF POLE TO CENTER OF POLE.
16. ALL ACCESSIBLE PEDESTRIAN CONTROL EQUIPMENT SHALL BE DELIVERED TO THE SHA SIGNAL SHOP FOR TESTING AND PROGRAMMING PRIOR TO INSTALLATION. CONTACT MR. EDWARD RODENHIZER AT 410-787-7650 TO COORDINATE.
17. ALL TRAFFIC SIGNAL EQUIPMENT INCLUDING CONDUIT SHALL BE CONSTRUCTED PRIOR TO SIDEWALK INSTALLATION.
18. THE CONTRACTOR SHALL REMOVE AND REPLACE CONCRETE SIDEWALK AT THE NEAREST JOINT.
19. THE CONTRACTOR SHALL ENSURE THE EXISTING TRAFFIC SIGNAL REMAINS OPERATIONAL UNTIL RECONSTRUCTED TRAFFIC SIGNAL IS OPERATIONAL.
20. PUSHBUTTONS ARE TO BE LOCATED SO THAT THEY CAN BE ACTIVATED BY A PERSON IN A WHEELCHAIR FROM A 60 IN. x 60 IN. LEVEL LANDING AREA. A LEVEL LANDING AREA IS AN AREA WITH A CROSS SLOPE OF LESS THAN OR EQUAL TO 2%.
21. PUSHBUTTON ARROWS ARE TO BE PARALLEL TO THE CROSSING FOR WHICH THEY ARE INTENDED.
22. ALL PROPOSED LUMINAIRES SHALL BE SUPPLIED WITH A PHOTOCELL.
23. THE CONTRACTOR SHALL INSTALL THE NW SIDEWALK RAMP AND PROPOSED PEDESTAL POLE DETAIL "E" TO CROSS THE SCHOOL ENTRANCE AFTER THE EXISTING SIGNAL EQUIPMENT HAS BEEN REMOVED.

TOD No: XX351-08
SHA No: PG769K56
MD 450 @ Bladensburg Elementary

APPROVALS	
TEAM LEADER	
ASST. DIV. CHIEF	ORIGINAL ON FILE
DIVISION CHIEF	
OFFICE DIRECTOR	

REVISIONS

Ⓐ FULL SIGNAL RECONSTRUCTION SHA #XX3515168 6/2010
STV MCG CJW NB RDS CDB CDS T.H.

SHA
STATE OF MARYLAND
DEPARTMENT OF TRANSPORTATION
STATE HIGHWAY ADMINISTRATION
OFFICE OF TRAFFIC & SAFETY
TRAFFIC ENGINEERING DESIGN DIVISION
MD 450 (ANNAPOLIS ROAD)
AT BLADENSBURG ELEMENTARY SCHOOL
BLADENSBURG, MARYLAND

SIGNALIZATION PLAN SHEET

SCALE 1" = 20' ADVERTISED DATE ______ CONTRACT NO. P-367-385

DESIGNED BY		COUNTY	PRINCE GEORGE'S
DRAWN BY	D. DODA	LOGMILE	160045000.59
CHECKED BY		TIMS NO.	K036
F.A.P. NO.	T-8006(23)	TOD NO.	

TS NO. 540A | DRAWING SG-01 OF 02 | SHEET NO. 01 OF 02

PLOTTED: Monday, June 07, 2010 AT 02:34 PM
FILE: I:\PROJECTS\4014255\4014255_0027\Drawings\TRA\School Entrance\pSG-P001_md450.dgn