PROJECT DESCRIPTION

GENERAL

△2 THIS PORTION OF THE PROJECT INVOLVES MODIFICATION AND INSTALLATION OF A CONTROLLER AND TRAFFIC SIGNALS AT THE INTERSECTION OF MD 450 AT TRINITY EPISCOPAL CHURCH/SCHOOL ENTRANCE IN PRINCE GEORGE'S COUNTY. MD 450 IS ASSUMED TO RUN IN AN EAST/WEST DIRECTION.

INTERSECTION OPERATION

THE INTERSECTION WILL CONTINUE TO OPERATE IN A NEMA-SINGLE-PHASE SEMI ACTUATED MODE. THE MOVEMENT ON TRINITY EPISCOPAL CHURCH/SCHOOL WILL OPERATE ONLY WHEN MANUALLY ACTUAUTED.

CONTROLLER REQUIREMENTS

△2 INSTALL A FULL-TRAFFIC-ACTUATED, SOLID STATE EIGHT PHASE CONTROLLER WITH SYSTEM PACKAGE, INTERSECTION MONITOR WITH BATTERY BACK-UP FOR PHONE DROP, TELEMETRY MODULE, ISOLATION BOARD AND SPECIAL RELAY HOUSED IN NEMA SIZE "6" BASE MOUNTED CABINET.

SPECIAL NOTE

ALL UTILITIES SHOWN ON THESE PLANS ARE SCHEMATIC AND ARE NOT TO BE CONSIDERED COMPLETE BECAUSE THESE UTILITIES MAY BE MODIFIED PRIOR TO AND DURING CONSTRUCTION. THE CONTRACTOR SHALL BE RESPONSIBLE FOR NOTIFYING ALL UTILITY COMPANIES PRIOR TO CONSTRUCTION SO THAT ALL UTILITIES MAY BE LOCATED IN THE FIELD. IF THE CONTRACTOR PERCEIVES THAT A CONFLICT BETWEEN THE UTILITIES AND THE TRAFFIC SIGNAL EQUIPMENT WILL OCCUR, THE CONTRACTOR SHALL NOTIFY THE PROJECT MANAGER IMMEDIATELY.

WIRING DIAGRAM

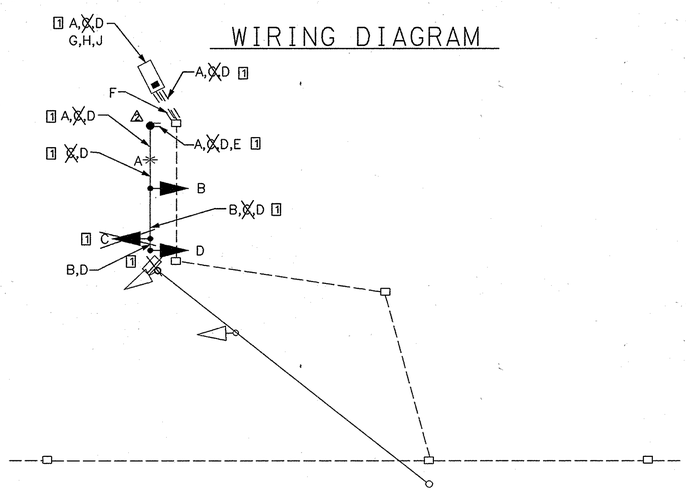

A	ELECTRICAL CABLE 2-CONDUCTOR (NO. 12 AWG)	△2 E,F	NO. 6 AWG STRANDED BARE COPPER GROUND WIRE
B	ELECTRICAL CABLE 5-CONDUCTOR (NO. 14 AWG)	△2 G,H,J	ELECTRICAL CABLE 1-CONDUCTOR (NO. 4 AWG)
[1] ~~C~~,D	ELECTRICAL CABLE 7-CONDUCTOR (NO. 14 AWG)		

EQUIPMENT LIST "A"

A. EQUIPMENT TO BE SUPPLIED BY THE SHA

CAT CODE NUMBER	SPEC. SECTION	QUANTITY	DESCRIPTION
△2 971017	816	1 EA.	EIGHT PHASE FULL TRAFFIC ACTUATED SOLID STATE DIGITAL CONTROLLER WITH SYSTEM PACKAGE HOUSED IN A NEMA SIZE "6" BASE MOUNTED CABINET
△2 973023	813	[1] 22 ~~X~~ S.F.	SHEET ALUMINUM SIGN TO CONSIST OF: -1 EA. ASSOCIATED SHIELD ASSEMBLY (~~X~~130 IN. X 51 IN.)-POLE MOUNT [1] -1 EA. S1-1 (FYG) (36 IN. X 42 IN.)-MAST ARM MOUNT

PHASE CHART

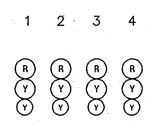

△2 PHASE 2+6	FL/Y	FL/Y	FL/Y	FL/Y	←
△2 2+6 CHANGE	Y	Y	Y	Y	→
△2 PHASE 4	R	R	R	R	↓
FLASHING OPERATION	FL/Y	FL/Y	FL/Y	FL/Y	←→

EQUIPMENT LIST "B"

B. EQUIPMENT TO BE FURNISHED AND INSTALLED BY THE CONTRACTOR

CAT CODE NUMBER	SPEC. SECTION	QUANTITY	DESCRIPTION
203030	205	△2 2 C.Y.	TEST PIT EXCAVATION
585450	555	52 L.F.	REMOVAL OF PAVEMENT MARKING ANY WIDTH
585620	556	150 L.F.	12 IN. HEAT APPLIED THERMOPLASTIC WHITE PAVEMENT MARKING
585624	556	△2 50 L.F.	24 IN. HEAT APPLIED THERMOPLASTIC WHITE PAVEMENT MARKING
801004	804	6 C.Y.	CONCRETE FOR SIGNAL FOUNDATION
802501	805	△2 15 L.F.	NO. 6 AWG STRANDED BARE COPPER GROUND WIRE
810010	810	45 L.F.	ELECTRICAL CABLE 1-CONDUCTOR (NO. 4 AWG)
△2 813006	813	11 S.F.	RELOCATE EXISTING SIGN
△2 813015	813	[1] 22 ~~X~~ S.F.	INSTALL OVERHEAD SIGN
831010	806	1 EA.	250 WATT LUMINAIRE WITH PHOTOCELL
837001	804	△2 2 EA.	GROUND ROD ¾ IN. X 10 FT. LENGTH
838003	807	1 EA.	CONTROL AND DISTRIBUTION EQUIPMENT (120/240V, 1 PHASE, 3 WIRE SYSTEM)
860265	814	1 EA.	RELOCATE EXISTING SIGNAL HEAD
860270	814	△2 2 EA.	8 IN. VEHICULAR TRAFFIC SIGNAL HEAD SECTION
860272	814	△2 4 EA.	12 IN. VEHICULAR TRAFFIC SIGNAL HEAD SECTION
861107	810	35 L.F.	ELECTRICAL CABLE 5-CONDUCTOR (NO. 14 AWG)
861108	810	△2 135 L.F.	ELECTRICAL CABLE 7-CONDUCTOR (NO. 14 AWG)
861116	810	△2 95 L.F.	ELECTRICAL CABLE 2-CONDUCTOR (NO. 12 AWG)
866104	818	1 EA.	20 FT. LIGHTING ARM FOR TRAFFIC SIGNAL STRUCTURE
~~866204~~	~~818~~	~~1 EA.~~	~~27 FT. STEEL POLE WITH 60 FT. MAST ARM~~
△2 870163	805	11 L.F.	3 IN. SCHEDULE 80 RIGID PVC ELECTRICAL CONDUIT-TRENCHED
870166	805	△2 131 L.F.	4 IN. SCHEDULE 80 RIGID PVC ELECTRICAL CONDUIT-TRENCHED
△2 871117	816	1 EA.	INSTALL CONTROLLER AND CABINET-BASE MOUNT
800000	XXX	1 L.S.	REMOVE AND DISPOSE OF EXISTING MATERIAL
[5] 818052	XXX	1 EA.	27 FT. STEEL POLE WITH 70 FT. MAST ARM

EQUIPMENT LIST "C"

C. ALL REMOVED SIGNAL MATERIALS SHALL BECOME PROPERTY OF THE CONTRACTOR.

Redline Revision

The Traffic Group
The Traffic Group, Inc.
410-931-6600
Fax 410-931-6601

[5] REDLINE REVISION 5 DATE 10/8/03
[1] REDLINE NO. 1
△2 ADDENDUM #2 10/11/2001

MARYLAND DOT - STATE HIGHWAY ADMINISTRATION
Office of Traffic & Safety
TRAFFIC ENGINEERING DESIGN DIVISION

THE WILSON T. BALLARD CO.
CONSULTING ENGINEERS
OWINGS MILLS, MARYLAND

GENERAL INFORMATION SHEET
MD 450 - MD 193 TO STONYBROOK DRIVE
MD 450 AT TRINITY EPISCOPAL CHURCH/SCHOOL PHASE III

DRAWN BY: MB	F.A.P. NO. SEE TITLE SHEET	TS NO. 4114-APH3B	SHEET NO.
CHECKED BY: STB	S.H.A. NO. PG9005571		
SCALE: NONE	COUNTY: PRINCE GEORGE'S	T.I.M.S. NO. D 538	408F OF 545
DATE: OCTOBER 2001	LOG MILE: 16045011.95		

E:\2002\2002-0608\DES\hilmeode\d538sg03c.dgn
8/15/2003