F.H.W.A. REGION NO.	STATE	FED. AID PROJ. NO.	SHEET NO.	TOTAL SHEETS
3	MD	SEE TITLE SHEET		

CONSTRUCTION DETAILS

FINAL

A. EXISTING CABINET/CONTROLLER ARE TO BE UTILIZED.
B. USE EXISTING CONDUIT.
C. USE EXISTING HANDHOLE.
D. USE EXISTING STRAIN POLE. INSTALL PEDESTRIAN SIGNAL HEAD AND SIGN.
E. USE EXISTING SPAN WIRE. RELOCATE EXISTING VEHICLE SIGNAL HEAD.
F. INSTALL 1 IN. GALVANIZED STEEL CONDUIT FOR DETECTOR SLEEVE.
G. INSTALL 12 IN. PREFORMED WHITE PAVEMENT MARKING TAPE FOR PEDESTRIAN CROSSWALK. (FOR DIMENSIONS OF CROSSWALK, REFER TO DWG. SN-2.1)
H. INSTALL 24 IN. PREFORMED WHITE PAVEMENT MARKING TAPE FOR STOP LINE.
J. INSTALL MICRO-PROBE TYPE VEHICLE DETECTOR.
K. INSTALL 6 FT. X 30 FT. QUADRUPOLE TYPE VEHICLE LOOP DETECTOR (3-6-3 TURNS) ENCASED IN FLEXIBLE TUBING.

1 ~~L. CAP AND ABANDON EXISTING CONDUIT.~~
1 ~~M. REMOVE EXISTING HANDHOLE.~~
1 ~~N. MAINTAIN EXISTING VEHICLE DETECTOR.~~
1 ~~O. ABANDON EXISTING VEHICLE DETECTOR.~~
1 ~~P. INSTALL HANDHOLE ON EXISTING CONDUIT.~~

SIGNAL HEADS

NOTES: SIGNAL HEADS 5,16,22 AND SIGNS 25,27,30,32,37-42 ARE EXISTING AND ARE TO REMAIN.

SIGNAL HEADS 11 IS EXISTING AND IS TO BE RELOCATED.

SIGNAL HEADS 1-4,6-10,12-15,17-21, PEDESTRIAN SIGNAL HEADS 23,24 AND SIGNS 26,28,29,31,33-36 ARE PROPOSED. **SIGNAL HEADS 9 & 19 ARE TO BE COVERED UNTIL DIRECTED BY THE ENGINEER TO UNCOVER.**

MD 450 ASSUMED TO RUN IN AN EAST - WEST DIRECTION

NEMA PHASING

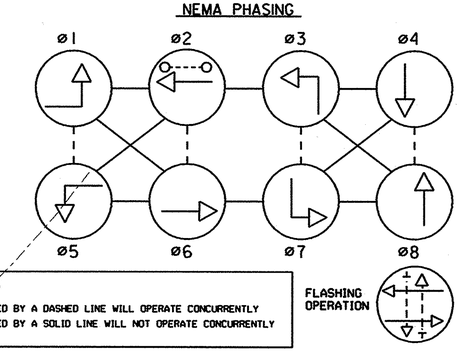

PHASING NOTES

1. PHASES ASSOCIATED BY A DASHED LINE WILL OPERATE CONCURRENTLY
2. PHASES ASSOCIATED BY A SOLID LINE WILL NOT OPERATE CONCURRENTLY

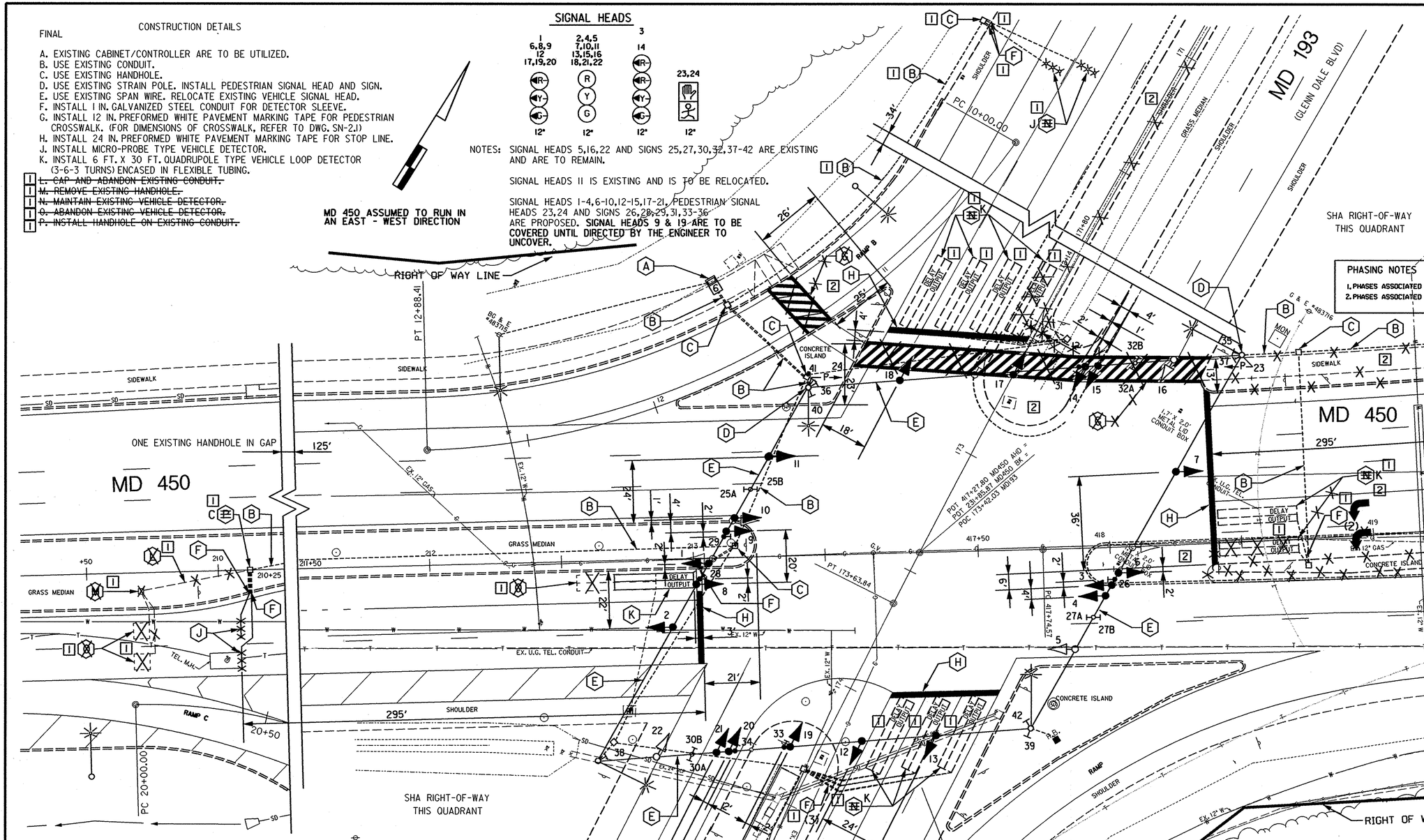

SIGNS

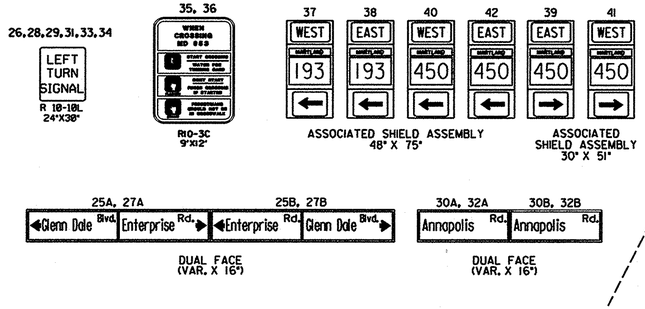

GENERAL NOTES

1. THE CONDUIT TO BE INSTALLED ACROSS THE PROPOSED ROADWAY SHALL BE TRENCHED PRIOR TO PAVEMENT CONSTRUCTION.
2. DETECTORS SHALL BE INSTALLED PRIOR TO FINAL PAVEMENT SURFACE COURSE.
3. THE CONTRACTOR SHALL CONFIRM THE LOCATIONS OF THE PROPOSED GEOMETRICS PRIOR TO THE INSTALLATION OF SIGNAL EQUIPMENT.
4. FOR THE LOCATION OF THE "ARROW" AND ONLY" PAVEMENT MARKINGS AND SIGNS, SEE THE PAVEMENT MARKING PLAN SN-2.7.
5. ALL POLE AND CABINET FOUNDATIONS AND HANDHOLES SHALL BE INSTALLED AT FINAL GRADE.

THE WILSON T. BALLARD CO.
CONSULTING ENGINEERS
OWINGS MILLS, MARYLAND

LEGEND OF UNDERGROUND AND OVERHEAD UTILITIES

AERIAL CABLES	A
ELECTRICAL	E
TELEPHONE	T
GAS	G
SEWER	S
WATER	W
CABLE TV	TV

ULTIMATE SIGNAL	DWG. NO. TS-33

REVISIONS				
© AUGUST 1996 - WTB REBUILD TO NEW GEOMETRICS SHA NO. PG9005171				
JDM				
Ⓑ 10-29-86 INSTALL E/P L/T ON ALL APPROACHES + LOOP DETS.				
JJD	SR	XX	ETP	TH
Ⓐ 10-23-86 AS BUILT				
JJD				

1 REDLINE REV. NO.1 7-14-97

2 REDLINE REV. NO.2 10-8-98

APPROVALS

ASST. DIVISION CHIEF, TEDD

ASST. DISTRICT ENGINEER, TRAFFIC

CHIEF, TRAFFIC ENGINEERING DESIGN DIVISION

DIRECTOR, OFFICE OF TRAFFIC & SAFETY

ORIGINAL FILE

MARYLAND DOT - STATE HIGHWAY ADMINISTRATION
Office of Traffic & Safety
TRAFFIC ENGINEERING DESIGN DIVISION

MD 450 (ANNAPOLIS ROAD) AT MD 193 (GLENN DALE BLVD / ENTERPRISE ROAD)

LOG MILE NO. 16019312.85 DATE 4 /21 /81

DRAWN BY: SR	F.A.P. NO. RR 18(49)	PLAN SHEET NO.: TS-1821C-P	SHEET NO. 379 OF 465
CHECK BY: STEVE RENZI	S.H.A. NO. P 170-501-382		
SCALE: 1" = 20"	COUNTY PRINCE GEORGES		

FILE NO. SS915450.DGN
09-11-96 WJS/TES