F.H.W.A. REGION NO.	STATE	FED AID PROJ. NO.	SHEET NO.	TOTAL SHEETS
3	MD.		11	15

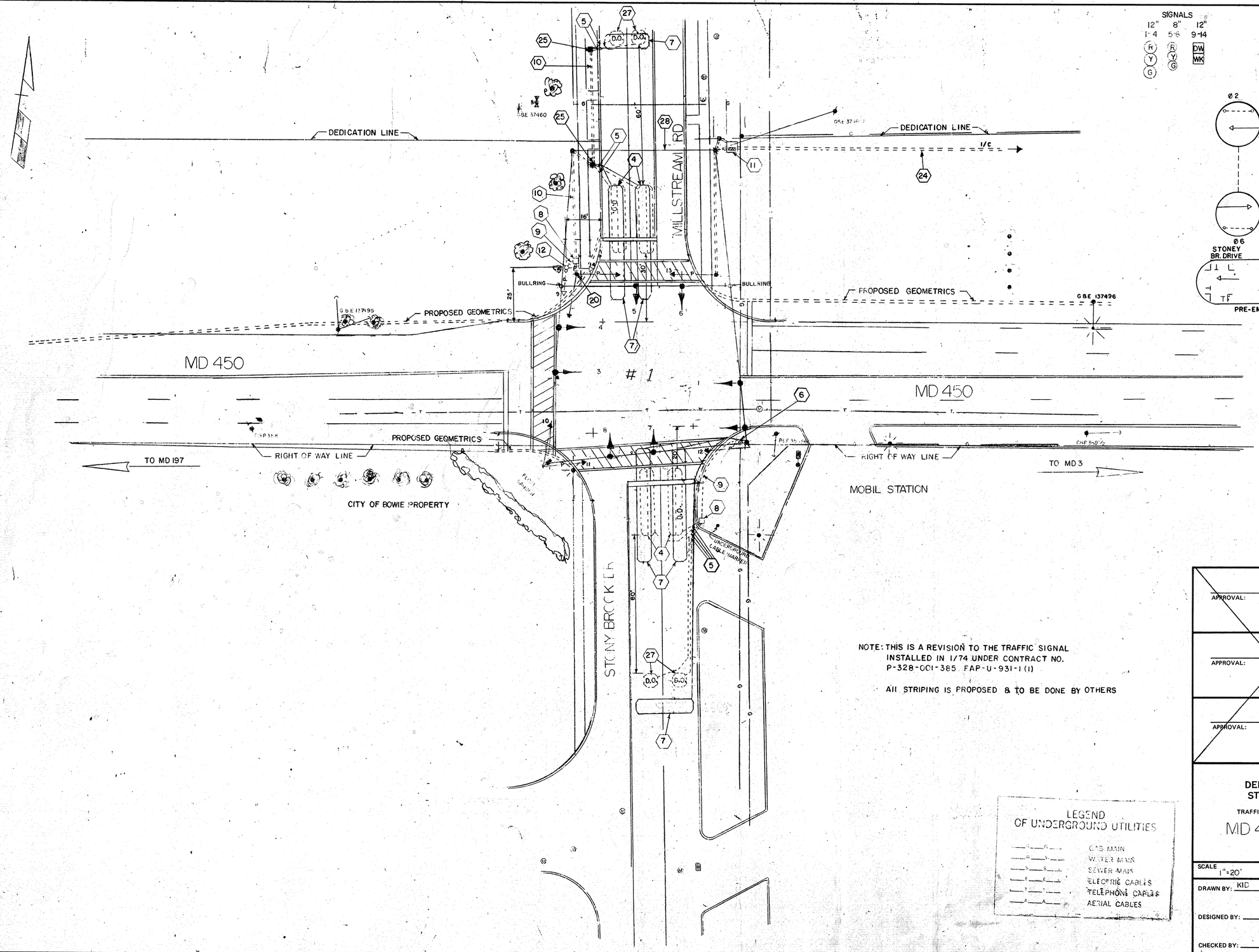

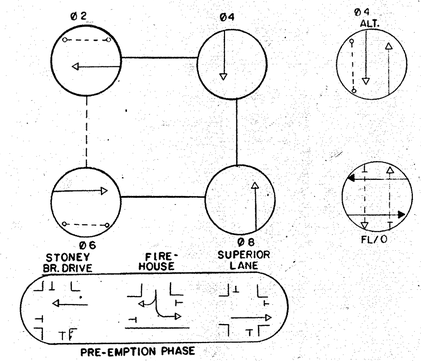

NOTE: THIS IS A REVISION TO THE TRAFFIC SIGNAL INSTALLED IN 1/74 UNDER CONTRACT NO. P-328-001-385 FAP-U-931-1 (1)

All STRIPING IS PROPOSED & TO BE DONE BY OTHERS

LEGEND OF UNDERGROUND UTILITIES

—G—G—	GAS MAIN
—W—W—	WATER MAIN
—S—S—	SEWER MAIN
—E—E—	ELECTRIC CABLES
—T—T—	TELEPHONE CABLES
—A—A—	AERIAL CABLES

APPROVAL: REGIONAL TRAFFIC ENGINEER

APPROVAL: CHIEF-BUREAU OF TRAFFIC ENGINEERING

APPROVAL: ASS'T. CHIEF ENGINEER TRAFFIC

REVISIONS	
B	4-84 RELOCATION OF SIG. EQUIP. DUE TO ROAD WIDEN'G P-791-501-377
DCD	
A	7-83 "ASBUILT" P-328-001-385 FAP-U-931-1 (1)
DCD	

STATE OF MARYLAND
DEPARTMENT OF TRANSPORTATION
STATE HIGHWAY ADMINISTRATION

TRAFFIC DIVISION – BUREAU OF TRAFFIC ENGINEERING

MD 450 & STONY BROOK DR & MILLSTREAM DR

SHEET 8 OF 14

SCALE	DATE	CONTRACT NO.
1"=20'	1-11-74	P-328-001-385 FAP NO U-931-1(1)

DRAWN BY: KID

COUNTY: PRINCE GEORGES

DESIGNED BY:

SIGNAL NO.: 16059

CHECKED BY:

DRAWING NO. TS-670A B

BRUNING 44511 19927