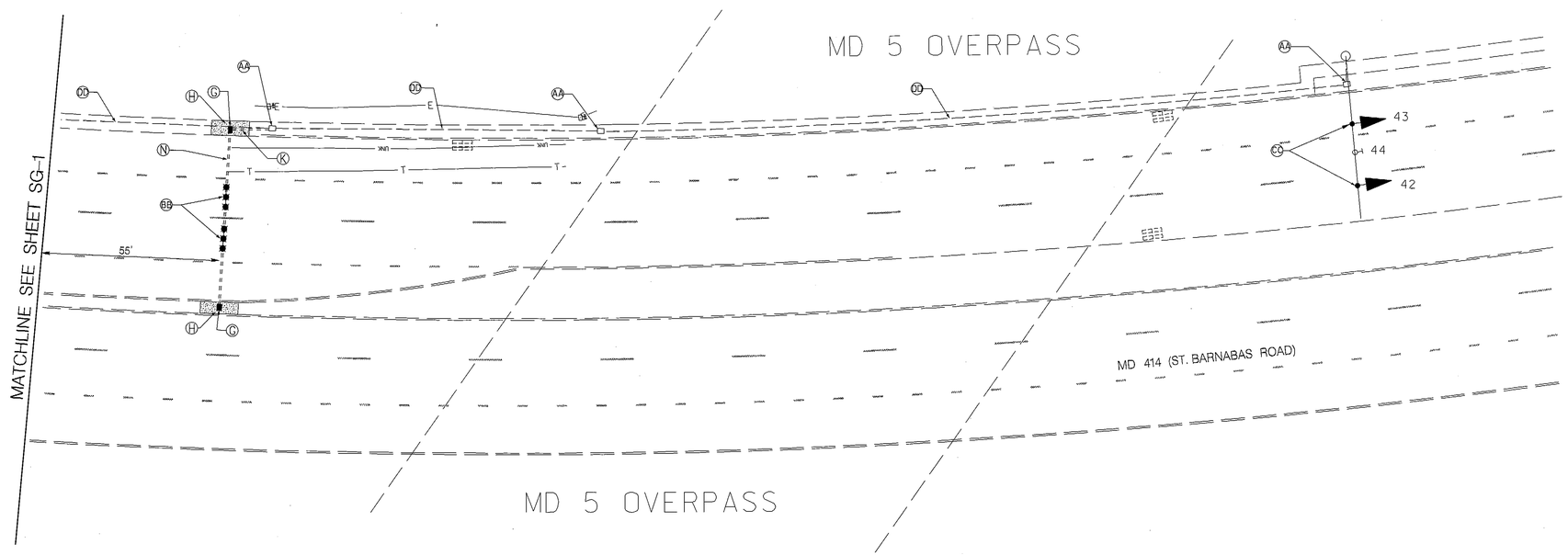


CONSTRUCTION DETAILS

(C) INSTALL ELECTRICAL HANDHOLE.
(K) INSTALL 2" SCHEDULE 80 RIGID PVC CONDUIT - SLOTTED.
(N) INSTALL 3" SCHEDULE 80 RIGID PVC CONDUIT - SLOTTED.
(AA) USE EXISTING HANDHOLE.
(BB) INSTALL NON-INVASIVE PROBES WITH 1000 FOOT LEAD IN CABLE.
(CC) REPLACE SIGNAL HEADS WITH LEDS.
(DD) USE EXISTING CONDUIT.

TOD NO: XX655-10
SHA NO: PG371854
MD 414 @ MD 5 W ramp/28th Avenue

STATE OF MARYLAND
DEPARTMENT OF TRANSPORTATION
STATE HIGHWAY ADMINISTRATION
OFFICE OF TRAFFIC & SAFETY
TRAFFIC ENGINEERING DESIGN DIVISION

MD 414 (SAINT BARNABAS ROAD) AT
MD 5 RAMP/28TH AVE.

# SIGNALIZATION PLAN SHEET

SCALE 1" = 20' ADVERTISED DATE _____ CONTRACT NO. BCS 2008-05D

DESIGNED BY J. HENKEL JS
DRAWN BY J. HENKEL JS
CHECKED BY MAR
F.A.P. NO. SEE TITLE SHEET
COUNTY PRINCE GEORGE'S
LOGMILE 16041403.93
TIMS NO.
TOD NO.

TS NO. 16 K | DRAWING SG-2 OF 3 | SHEET NO. 2 OF 4

REVISIONS

| | | | | | |
|---|---|---|---|---|---|
| (K) | RECONSTRUCT SIGNAL 3/2011 CONTRACT # XX655185 | | | | TIMS NO. J 728 |
| KCI | | | | | |
| | AT2885185 | | | | |
| J | MODIFY TRAFFIC SIGNAL HEADS ON MD 414 AND SPLIT PHASE ON 28TH AVE | | | | |
| SS/SWA | W.N. | N.A.B. | D.A.Z. | B.B.K. | T.H. |
| I | INSTALL BLACK FACED SIGNALS INSTALL #3-3 BE PREPARED TO STOP WHEN FLASHING FOR W/B 414 PRIOR TO MD 5 OVERPASS TIMS# D-476 | | | | |
| J.A.H. | M.A.R. | | B.B.K. | | T.H. |

PLOTTED: Friday, August 19, 2011 at 2:42:47 PM
FILE: SP022728_MD414 at MD 5.dgn

KCI TECHNOLOGIES
Engineers
Planners
Scientists
Construction Managers
936 Ridgebrook Road
Sparks, Maryland 21152
Telephone: (410) 316-7800
Fax: (410) 316-7818

BY: fanuszewski