10 WIRING DIAGRAM
OXON HILL ROAD AND RAMP E-1/SOUTH ROAD

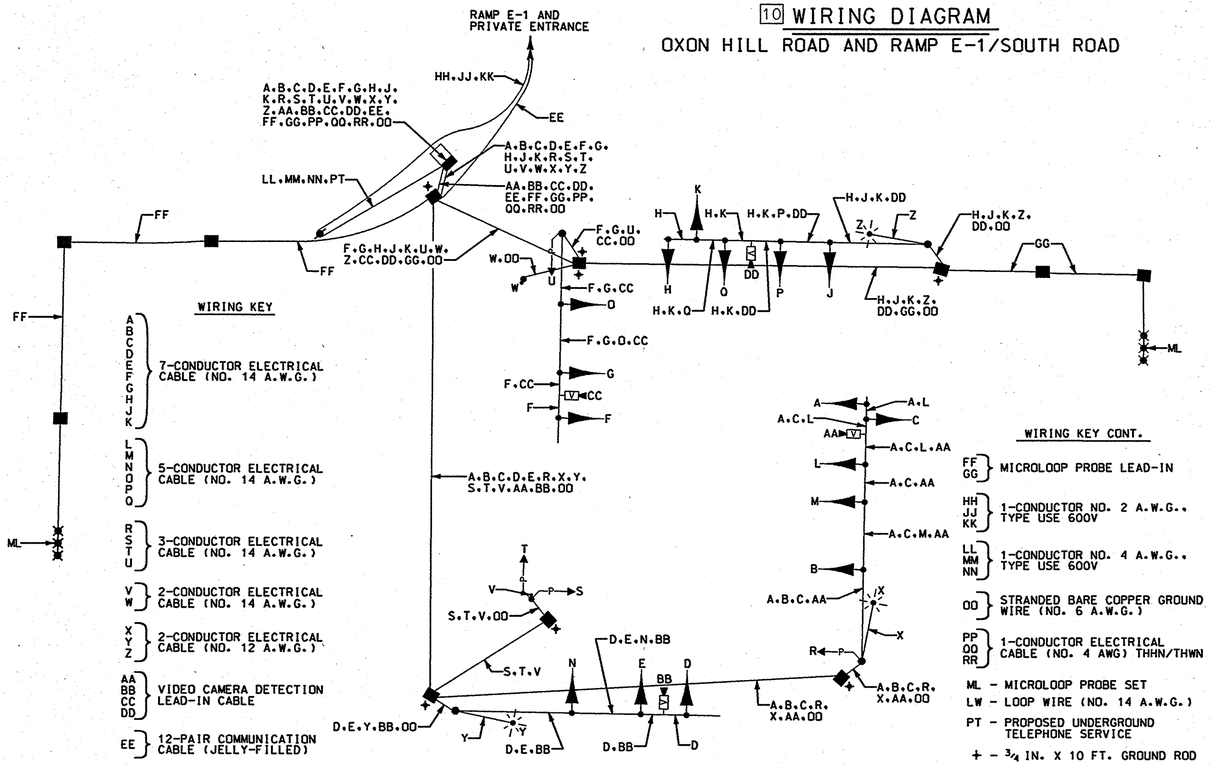

10 PHASE CHART
OXON HILL ROAD AND RAMP E-1/SOUTH ROAD

	1	2	3	4	5	6	7	8	9	10	11	12	13	14	15	16	17	18	19	20
PHASE 1 + 5	←G—	←G—	R	R	←G—	←G—	R	R	←R—	←R—	R	R	←R—	←R—	R	R	DW	DW	DW	DW
1 + 5 CHANGE	PHASE 1 + 5 MAY CHANGE TO PHASE 1 + 6, PHASE 2 + 5 OR PHASE 2 + 6																			
PHASE 1 + 6	←R—	←R—	R	R	←G—	←G—	G	G	←R—	←R—	R	R	←R—	←R—	R	R	WK	WK	DW	DW
1 + 6 CHANGE	←R—	←R—	R	R	←Y—	←Y—	G	G	←R—	←R—	R	R	←R—	←R—	R	R	WK	WK	DW	DW
PHASE 2 + 5	←G—	←G—	G	G	←R—	←R—	R	R	←R—	←R—	R	R	←R—	←R—	R	R	DW	DW	DW	DW
2 + 5 CHANGE	←Y—	←Y—	G	G	←R—	←R—	R	R	←R—	←R—	R	R	←R—	←R—	R	R	DW	DW	DW	DW
PHASE 2 + 6	←R—	←R—	G	G	←R—	←R—	G	G	←R—	←R—	R	R	←R—	←R—	R	R	WK	WK	DW	DW
PED CLEARANCE	←R—	←R—	G	G	←R—	←R—	G	G	←R—	←R—	R	R	←R—	←R—	R	R	FL/DW	FL/DW	DW	DW
2 + 6 CHANGE	←R—	←R—	Y	Y	←R—	←R—	Y	Y	←R—	←R—	R	R	←R—	←R—	R	R	DW	DW	DW	DW
PHASE 3 + 7	←R—	←R—	R	R	←R—	←R—	R	R	←G—	←G—	R	R	←G—	←G—	R	R	DW	DW	DW	DW
3 + 7 CHANGE	PHASE 3 + 7 MAY CHANGE TO PHASE 3 + 8, PHASE 4 + 7 OR PHASE 4 + 8																			
PHASE 3 + 8	←R—	←R—	R	R	←R—	←R—	R	R	←G—	←G—	G	G	←R—	←R—	R	R	DW	DW	DW	DW
3 + 8 CHANGE	←R—	←R—	R	R	←R—	←R—	R	R	←Y—	←Y—	G	G	←R—	←R—	R	R	DW	DW	DW	DW
PHASE 4 + 7	←R—	←R—	R	R	←R—	←R—	R	R	←R—	←R—	R	R	←G—	←G—	G	G	DW	DW	DW	DW
4 + 7 CHANGE	←R—	←R—	R	R	←R—	←R—	R	R	←R—	←R—	R	R	←Y—	←Y—	G	G	DW	DW	DW	DW
PHASE 4 + 8	←R—	←R—	R	R	←R—	←R—	R	R	←R—	←R—	G	G	←R—	←R—	G	G	DW	DW	DW	DW
4 + 8 CHANGE	←R—	←R—	R	R	←R—	←R—	R	R	←R—	←R—	Y	Y	←R—	←R—	Y	Y	DW	DW	DW	DW
PHASE 4 + 8 ALT	←R—	←R—	R	R	←R—	←R—	R	R	←R—	←R—	G	G	←R—	←R—	G	G	DW	DW	WK	WK
PED CLEARANCE	←R—	←R—	R	R	←R—	←R—	R	R	←R—	←R—	G	G	←R—	←R—	G	G	DW	DW	FL/DW	FL/DW
4 + 8 ALT CHANGE	←R—	←R—	R	R	←R—	←R—	R	R	←R—	←R—	Y	Y	←R—	←R—	Y	Y	DW	DW	DW	DW
FLASHING OPERATION	←FL/R—	←FL/R—	FL/Y	FL/Y	←FL/R—	←FL/R—	FL/Y	FL/Y	←FL/R—	←FL/R—	FL/R	FL/R	←FL/R—	←FL/R—	FL/R	FL/R	DARK	DARK	DARK	DARK

WIRING DIAGRAM
RAMP E-1 AND PRIVATE ENTRANCE

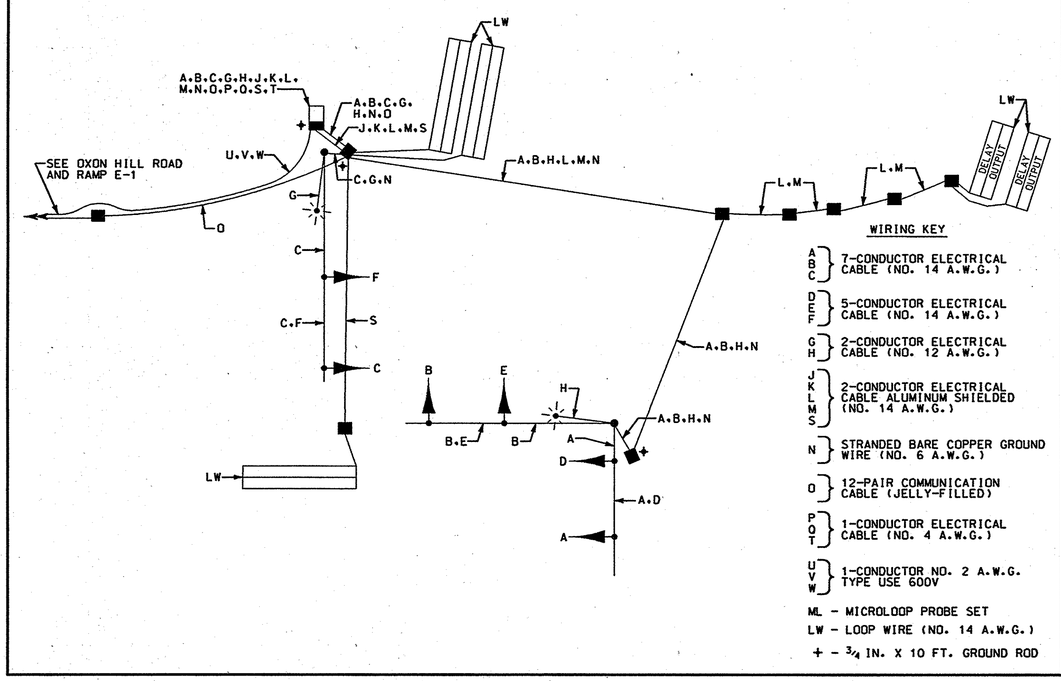

PHASE CHART
RAMP E-1 AND PRIVATE ENTRANCE

	1	2	3	4	5	6
PHASE 2	←R—	←R—	G	G	—R→	—R→
2 CHANGE	←R—	←R—	Y	Y	—R→	—R→
PHASE 4 + 8	←G—	←G—	R	R	—G→	—G→
4 + 8 CHANGE	←Y—	←Y—	R	R	—Y→	—Y→
FLASHING OPERATION	←FL/R—	←FL/R—	FL/Y	FL/Y	—FL/R→	—FL/R→

10 REVISED WIRING DIAGRAM AND PHASE CHART REDLINE REVISION NO. 10

PUSHBUTTON POLE DETAIL
NOT TO SCALE

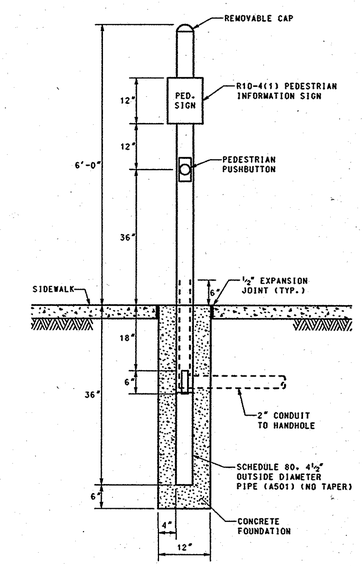

TSP-3

WR&A
Whitman, Requardt and Associates, LLP
801 South Caroline Street
Baltimore, Maryland 21231
(410) 235-3450

MARYLAND DOT - STATE HIGHWAY ADMINISTRATION
Office of Traffic & Safety
TRAFFIC ENGINEERING DESIGN DIVISION
GENERAL INFORMATION SHEET
RAMP E-1 INTERSECTIONS

DRAWN BY: S.BLOSS	F.A.P. NO.		TS NO.		SHEET NO.
CHECKED BY: N.LEARY	S.H.A. NO.	PG3465178			
SCALE: NONE	COUNTY:	PRINCE GEORGES	T.I.M.S. NO.		OF
DATE: 5/11/2004	LOG MILE:				

M:\31108\Contract_EFR\Redline10\sd03efr_r10.dgn