MD 337 IS ASSUMED TO RUN IN AN EAST-WEST DIRECTION

EXISTING SIGNS TO REMAIN

19,20,24,28 — R3-5(R) (30"X36")

25 — R3-(L) (30"X36")

26 — WEST MARYLAND 337

27 — EAST MARYLAND 337

18a,21a — Suitland Rd

18b,21b — Suitland Rd

29-32 — R1-2 (36"X36")

22 — EAST MARYLAND 337

23 — WEST MARYLAND 337

EXISTING VIDEO DETECTION CAMERAS TO REMAIN

a,b,c,d

EXISTING SIGNAL HEADS TO BE REMOVED

12"

EXISTING SIGNAL HEADS TO REMAIN

1,2,3,6,7 — 12"

4,5,8,9,12,15 — 12"

10,11,13,14 — 12"

PROPOSED L.E.D. SIGNALS

33-36 — 16"

NEMA PHASING

Ø1 Ø2 Ø3 Ø4 Ø5 Ø6 Ø3 ALT. FIRE PRE-EMPTION

FLASHING OPERATION

NOTE:
PHASES ASSOCIATED BY A DASHED LINE WILL OPERATE CONCURRENTLY.
PHASES ASSOCIATED BY A SOLID LINE WILL NOT OPERATE CONCURRENTLY.

PROPOSED SIGNS

41-43 — W11-2 FY (36"X36") M6-2(R) FY (21"X15")

44-46 — W11-2 FY (36"X36") M6-2(L) FY (21"X15")

EXISTING OPTICOM DETECTOR EYES TO REMAIN

16,17

PROPOSED ACCESSIBLE PUSHBUTTON AND SIGN

37 — ALLENTOWN ROAD

38 — ALLENTOWN ROAD

39,40 — SUITLAND ROAD

R10-3(1) (9" X 15")

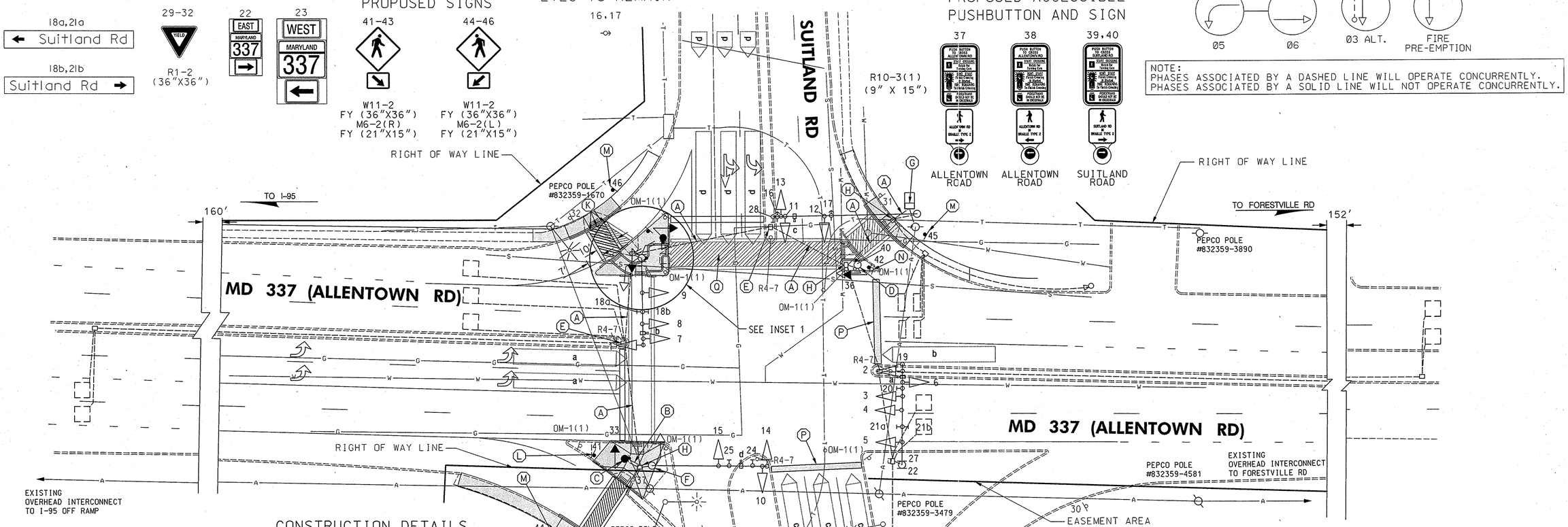

INSET 1
NOT TO SCALE

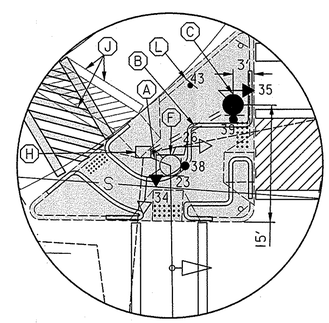

SPECIAL NOTE:
FOR SIDEWALK AND RAMP DETAILS REFER TO SEPARATE SIDEWALK PLANS.

CROSSWALK DETAIL

CONSTRUCTION DETAILS

A. USE EXISTING CONDUIT.

B. INSTALL 3 INCH SCHEDULE 80 RIGID PVC CONDUIT - TRENCHED.

C. INSTALL 10 FT. BREAKAWAY PEDESTAL POLE WITH PEDESTRIAN COUNTDOWN LED SIGNAL HEAD, APS PUSHBUTTON AND SIGN (ORIENTED PARALLEL TO CROSSWALK). NOTE: INSTALL 1 - 3 INCH CONDUIT BEND IN FOUNDATION.

D. REMOVE EXISTING PEDESTRIAN SIGNAL HEAD AND PUSHBUTTON FROM EXISTING PEDESTAL POLE. INSTALL PEDESTRIAN COUNTDOWN LED SIGNAL HEAD, APS PUSHBUTTON AND SIGN (ORIENTED PARALLEL TO CROSSWALK) ON EXISTING PEDESTAL POLE. PLUG ALL UNUSED HOLES IN EXISTING PEDESTAL POLE.

E. USE EXISTING HANDHOLE.

F. REMOVE EXISTING PEDESTRIAN SIGNAL HEADS AND PUSHBUTTON FROM EXISTING SIGNAL POLE. PLUG ALL UNUSED HOLES IN EXISTING SIGNAL POLE.

G. USE EXISTING CABINET.

H. ADJUST EXISTING HANDHOLE TO BE FLUSH WITH PROPOSED SIDEWALK.

J. REMOVE EXISTING CROSSWALK PAVEMENT MARKINGS.

K. INSTALL 12" SOLID WHITE LEAD FREE REFLECTIVE THERMOPLASTIC PAVEMENT MARKING.

L. INSTALL 4"X4" WOOD SUPPORT WITH W11-2R AND M6-2R SIGNS.

M. INSTALL 4"X4" WOOD SUPPORT WITH W11-2L AND M6-2L SIGNS.

N. REMOVE EXISTING OM-1(1) SIGN AND SUPPORT. INSTALL 4"X4" WOOD SUPPORT IN EXISTING SUPPORT LOCATION WITH W11-2R AND M6-2R SIGNS. RELOCATE EXISTING OM-1(1) SIGN TO PROPOSED 4"X4" WOOD SUPPORT.

P. INSTALL 24 INCH (2-12 INCH) WHITE LEAD FREE REFLECTIVE THERMOPLASTIC PAVEMENT MARKING.

Q. REMOVE CROSSWALK HATCHING.

GEOMETRIC LEGEND
- EXISTING
- PROPOSED

UTILITY LEGEND
- SD — STORM DRAIN
- G — GAS MAIN
- W — WATER MAIN
- S — SEWER MAIN
- E — ELECTRIC CABLES
- A — AERIAL CABLES
- T — TELEPHONE CABLES
- F — FIBER-OPTIC

RUMMEL, KLEPPER & KAHL, LLP
CONSULTING ENGINEERS
81 MOSHER STREET
BALTIMORE, MARYLAND 21217
TELE:(410)728-2900 FAX:(410)383-3270

APPROVALS
TEAM LEADER
ASST. DIV. CHIEF
DIVISION CHIEF
OFFICE DIRECTOR
ORIGINAL ON FILE

REVISIONS

H	ADD APS PUSHBUTTONS AND COUNTDOWN PED HEADS AXI785I33		04/02/07
MRB	DAE		
G	REPLACE MD 337 SIGNAL HEADS WITH BLACK FACED HEADS. INSTALL QUEING LOOP TIMS #0473		12/99
JAH			
F	AS BUILT	STS	12/21/98

FILE: K:/projects/104-134/Task94/dgn/

SHA CONSTRUCTION NO. PG586A51

STATE OF MARYLAND
DEPARTMENT OF TRANSPORTATION
STATE HIGHWAY ADMINISTRATION
OFFICE OF TRAFFIC & SAFETY
TRAFFIC ENGINEERING DESIGN DIVISION

MD 337 (ALLENTOWN ROAD) AT SUITLAND ROAD
CAMP SPRINGS, MARYLAND

TRAFFIC SIGNAL PLAN

SCALE 1" = 20' DATE 1-22-94 CONTRACT NO. PG308A55IB55

DESIGNED BY BRUCE THOMPSON
DRAWN BY BRUCE THOMPSON
CHECKED BY DIMITRIOS ZAFARIS
FAP NO. P-407-501-385

COUNTY PRINCE GEORGES
LOGMILE 16033701.61
TIMS NO.
TOD NO.

TS NO. 1069H DRAWING - OF SHEET NO. 22 OF 23