MD 223/ROSARYVILLE ROAD IS ASSUMED TO RUN IN A NORTH-SOUTH DIRECTION

EXISTING SIGNS

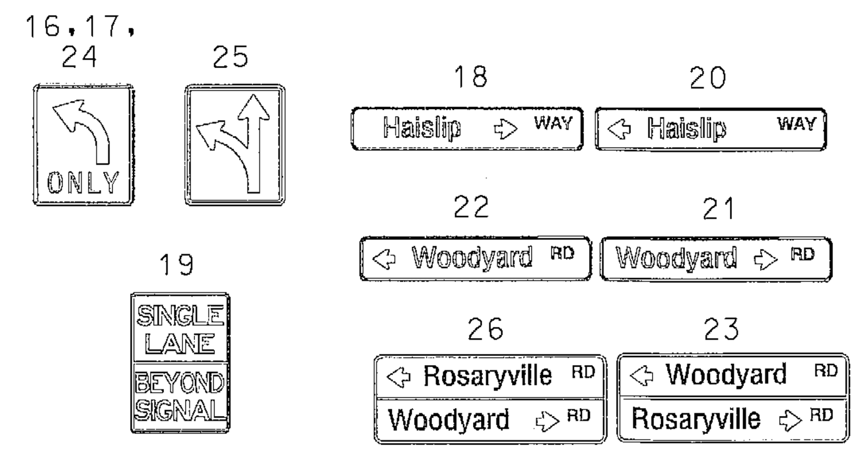

EXISTING LED SIGNALS

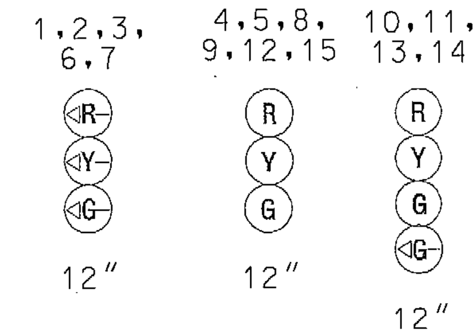

EXISTING VIDEO DETECTION CAMERA

a,b,c,d

EXISTING VIDEO DETECTION ZONES

a,b,c,d

NEMA PHASING

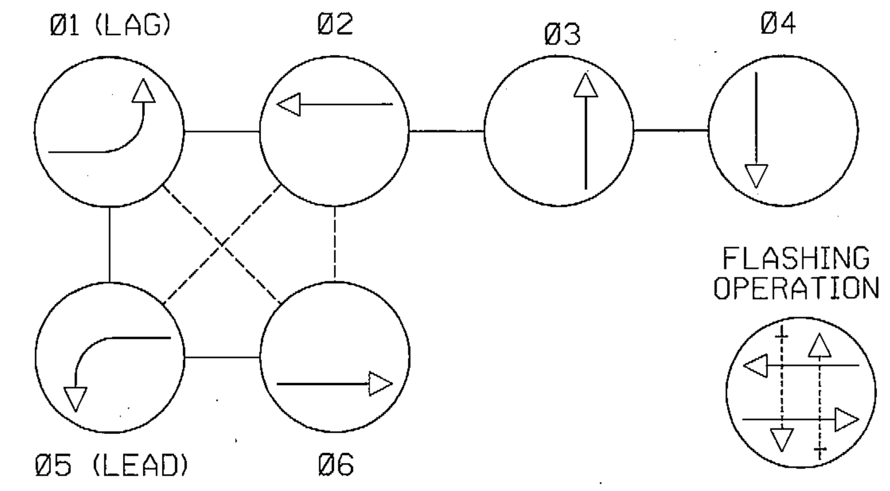

NOTE:
PHASES ASSOCIATED BY A DASHED LINE WILL OPERATE CONCURRENTLY.
PHASES ASSOCIATED BY A SOLID LINE WILL NOT OPERATE CONCURRENTLY.

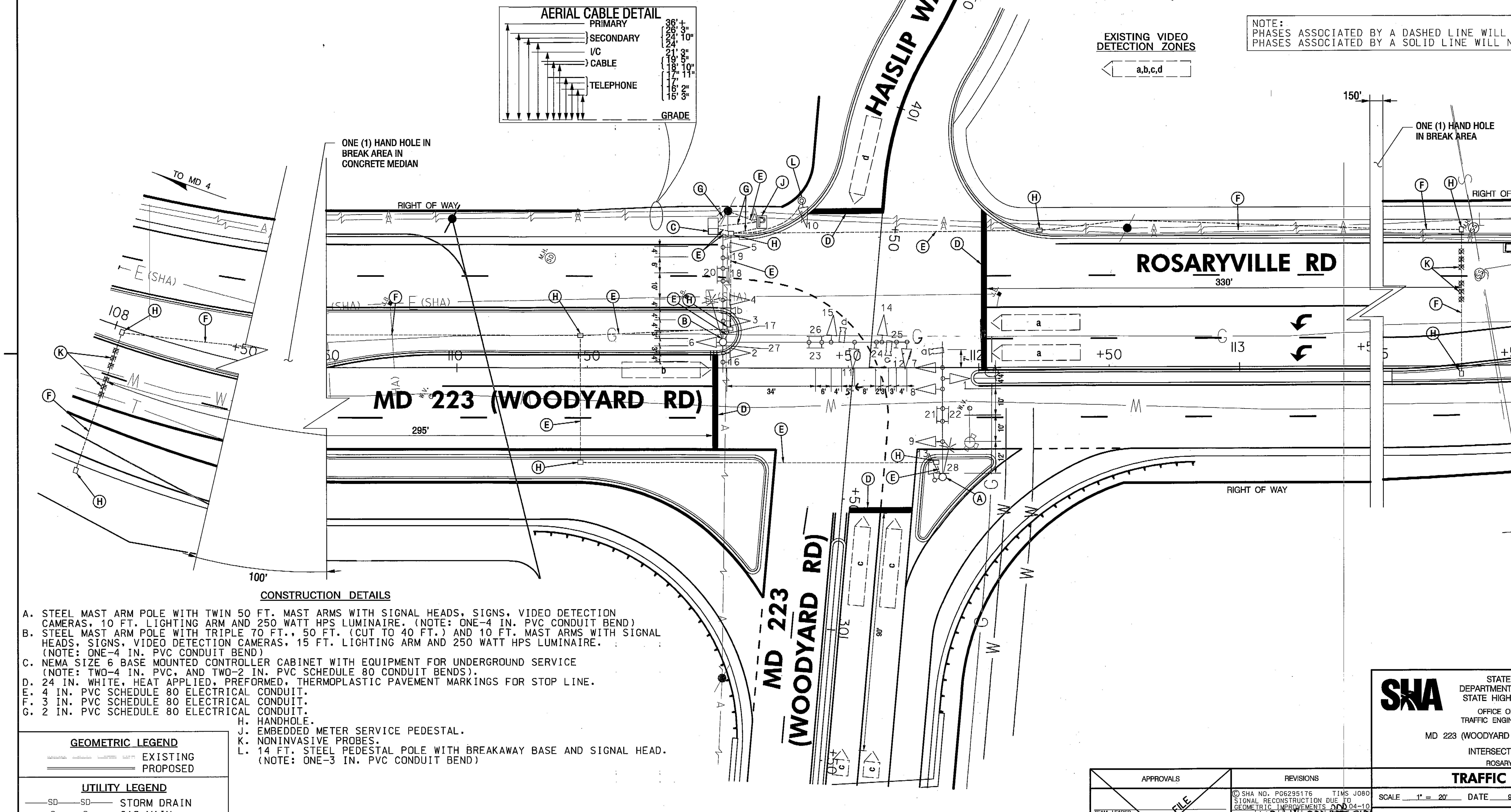

CONSTRUCTION DETAILS

A. STEEL MAST ARM POLE WITH TWIN 50 FT. MAST ARMS WITH SIGNAL HEADS, SIGNS, VIDEO DETECTION CAMERAS, 10 FT. LIGHTING ARM AND 250 WATT HPS LUMINAIRE. (NOTE: ONE-4 IN. PVC CONDUIT BEND)
B. STEEL MAST ARM POLE WITH TRIPLE 70 FT., 50 FT. (CUT TO 40 FT.) AND 10 FT. MAST ARMS WITH SIGNAL HEADS, SIGNS, VIDEO DETECTION CAMERAS, 15 FT. LIGHTING ARM AND 250 WATT HPS LUMINAIRE. (NOTE: ONE-4 IN. PVC CONDUIT BEND)
C. NEMA SIZE 6 BASE MOUNTED CONTROLLER CABINET WITH EQUIPMENT FOR UNDERGROUND SERVICE (NOTE: TWO-4 IN. PVC, AND TWO-2 IN. PVC SCHEDULE 80 CONDUIT BENDS).
D. 24 IN. WHITE, HEAT APPLIED, PREFORMED, THERMOPLASTIC PAVEMENT MARKINGS FOR STOP LINE.
E. 4 IN. PVC SCHEDULE 80 ELECTRICAL CONDUIT.
F. 3 IN. PVC SCHEDULE 80 ELECTRICAL CONDUIT.
G. 2 IN. PVC SCHEDULE 80 ELECTRICAL CONDUIT.
H. HANDHOLE.
J. EMBEDDED METER SERVICE PEDESTAL.
K. NONINVASIVE PROBES.
L. 14 FT. STEEL PEDESTAL POLE WITH BREAKAWAY BASE AND SIGNAL HEAD. (NOTE: ONE-3 IN. PVC CONDUIT BEND)

GEOMETRIC LEGEND

EXISTING
PROPOSED

UTILITY LEGEND

SD — SD	STORM DRAIN
G — G	GAS MAIN
W — W	WATER MAIN
S — S	SEWER MAIN
E — E	ELECTRIC CABLES
A — A	AERIAL CABLES
T — T	TELEPHONE CABLES
F — F	FIBER-OPTIC

BY: Agriffin -

SABRA, WANG & ASSOCIATES, INC.
1504 JOH AVENUE
SUITE 160
BALTIMORE, MD 21227
(410) 737-6564
WWW.SABRA-WANG.COM

APPROVALS
TEAM LEADER
ASST. DIV. CHIEF
DIVISION CHIEF
OFFICE DIRECTOR
ORIGINAL ON FILE

REVISIONS

C. SHA NO. PG6295176 TIMS J080
SIGNAL RECONSTRUCTION DUE TO GEOMETRIC IMPROVEMENTS 04-10
SWA
B. SHA NO. 2/88
INSTALL NEW MAST ARM AND LOOPS
RRZ
A. SHA NO. OT-3-88 06-29-93
REMOVE THE R/T OVERLAP ON S.B. MD 223
CA

STATE OF MARYLAND
DEPARTMENT OF TRANSPORTATION
STATE HIGHWAY ADMINISTRATION
OFFICE OF TRAFFIC & SAFETY
TRAFFIC ENGINEERING DESIGN DIVISION

MD 223 (WOODYARD ROAD) AT ROSARYVILLE ROAD
INTERSECTION IMPROVEMENTS
ROSARYVILLE, MARYLAND

TRAFFIC SIGNAL PLAN

SCALE 1" = 20' DATE 9-27-77 CONTRACT NO. P 572-501-385

DESIGNED BY HOWARD J. KILIAN	COUNTY PRINCE GEORGE'S
DRAWN BY M.J./H. KILIAN	LOGMILE 16022310.24
CHECKED BY WILLIAM J. RICHARDSON	T.I.M.S. NO. J080
F.A.P. NO. SEE TITLE SHEET	TOD NO.

TS NO. 1530C | DRAWING NO. pSG OF P005 | SHEET NO. 79 OF 93

PLOTTED: Monday, July 12, 2010 AT 02:03 PM
FILE: R:\2002\73 BCS 2002-07 Surv_Eng_Svc URS\Task 14 MD 223 at Rosaryville\Dgn\Signal\pSG-P005_MD223.dgn