DRILL HOLES

BORDER REV: DATE: June 1, 2004

EXISTING SIGNS

16 — LEFT TURN YIELD ON GREEN — R10-12 36"x 42" (TO BE REMOVED)

17b,20a — Ray Rd — D3-2 VARIABLE X 16"

17a,20b — Ray Rd — D3-2 VARIABLE X 16"

24 — Riggs Rd — D3-2 VARIABLE X 16"

22 — SOUTH / MARYLAND 212 — M3-3 24"x 12", M1-5 30"x 24", M6-1 21"x 15" — ASSOCIATED SHIELD ASSEMBLY 30" x 51"

23 — NORTH / MARYLAND 212 — M3-4 30"x 15", M1-5 48"x 36", M6-1 30"x 24" — ASSOCIATED SHIELD ASSEMBLY 48" x 75"

27 — S2-1 36" x 36", M6-2 21" x 15"

26,28 — S2-1 36" x 36", M6-2 21" x 15"

MD 212 IS CONSIDERED TO RUN IN A NORTH-SOUTH DIRECTION

PROPOSED SIGNS

25 — S2-1 36" x 36", M6-2 21" x 15"

29 — R10-4(1) MOD 9" x 15" — PUSH BUTTON TO CROSS RIGGS RD — MD 212 (RIGGS RD)

30 — R10-4(1) MOD 9" x 15" — PUSH BUTTON TO CROSS RIGGS RD — MD 212 (RIGGS RD)

31 — R10-4(1) MOD 9" x 15" — PUSH BUTTON TO CROSS RAY ROAD — RAY ROAD

32 — R10-4(1) MOD 9" x 15" — PUSH BUTTON TO CROSS RAY ROAD — RAY ROAD

EXISTING SIGNALS

1 — 12" R 8", 12" Y 8", 12" G 8"

2 — R, Y, G — 12"

3-9 — R, Y, G — 12"

VIDEO DETECTION CAMERA (A-C)

PROPOSED SIGNALS

10,11,12,13 — LED 16" COUNTDOWN PEDESTRIAN SIGNAL HEAD

NEMA PHASING

Ø1, Ø2, Ø4, Ø4 ALT, Ø6, Ø8, FLASHING OPERATION

PHASING NOTES:
1.) PHASES ASSOCIATED BY A DASHED LINE WILL OPERATE CONCURRENTLY
2.) PHASES ASSOCIATED BY A SOLID LINE WILL NOT OPERATE CONCURRENTLY

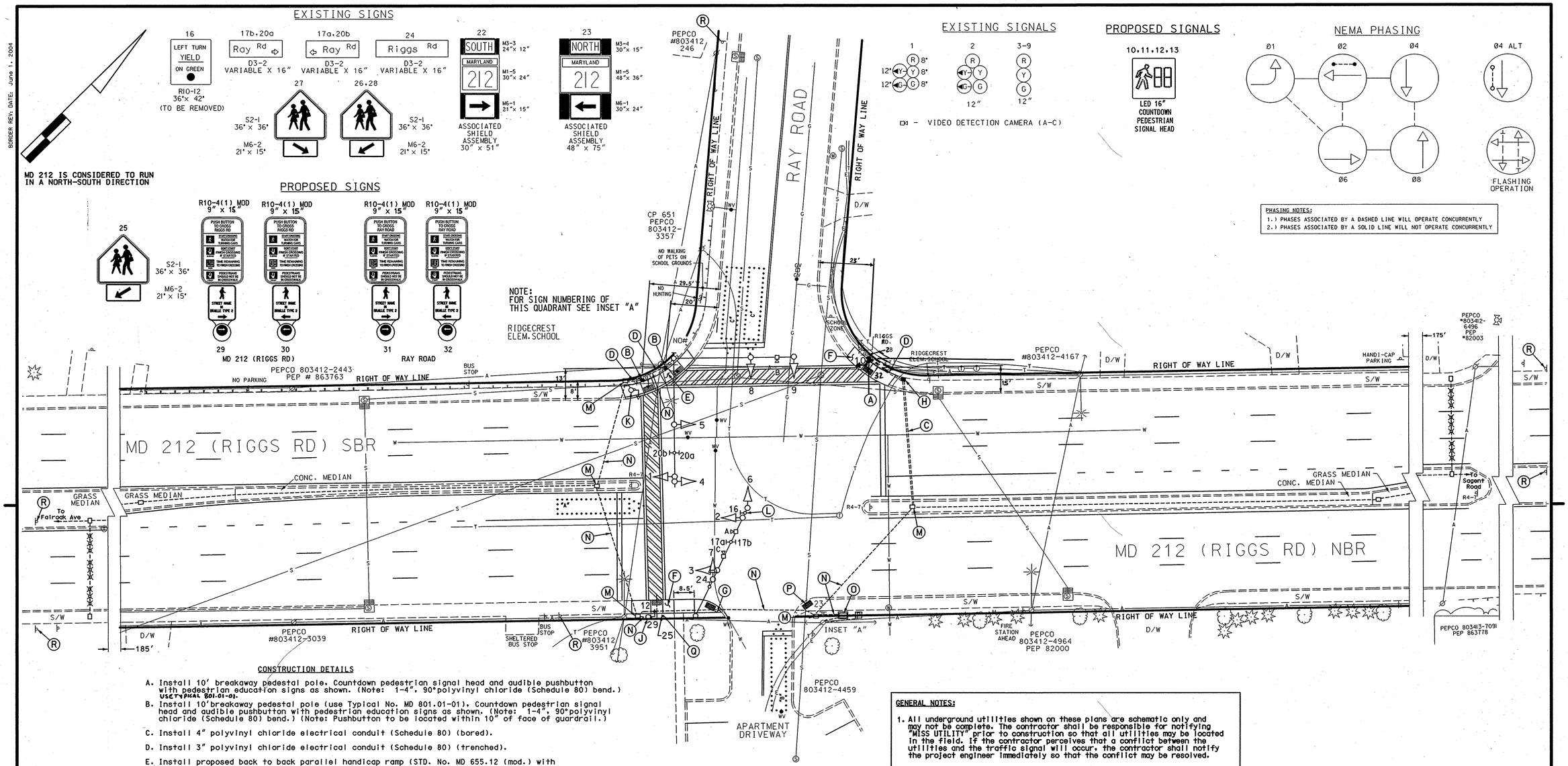

CONSTRUCTION DETAILS

A. Install 10' breakaway pedestal pole. Countdown pedestrian signal head and audible pushbutton with pedestrian education signs as shown. (Note: 1-4", 90°polyvinyl chloride (Schedule 80) bend.) USE TYPICAL 801.01-01.

B. Install 10'breakaway pedestal pole (use Typical No. MD 801.01-01). Countdown pedestrian signal head and audible pushbutton with pedestrian education signs as shown. (Note: 1-4", 90°polyvinyl chloride (Schedule 80) bend.) (Note: Pushbutton to be located within 10" of face of guardrail.)

C. Install 4" polyvinyl chloride electrical conduit (Schedule 80) (bored).

D. Install 3" polyvinyl chloride electrical conduit (Schedule 80) (trenched).

E. Install proposed back to back parallel handicap ramp (STD. No. MD 655.12 (mod.) with detectable warning surface.

F. Install proposed parallel handicap ramp (STD. No. MD 655.12) with detectable warning surface.

G. Install proposed 8.5' sidewalk and handicap ramp sloped at 12:1 with detectable warning surface as shown.

H. Install handhole.

J. Remove existing pedestrian signal head and pedestrian pusbutton with education sign. Install Countdown pedestrian signal head and audible pushbutton with pedestrian education signs (Note: Contractor shall return existing pushbutton and education sign to SHA signal shop).

K. Remove existing pedestal pole and foundation along with all signal equipment. (Note: Contractor shall return existing pushbutton and education sign to SHA signal shop).

L. Remove existing overhead sign.

M. Use existing handhole.

N. Use existing conduit.

O. Use existing base mounted cabinet and controller.

P. Install detectable warning surface at existing handicap ramp.

Q. Install ground mounted sign.

R. Remove existing ground mounted sign.

INSET "A"

SCALE: 1"= 10'

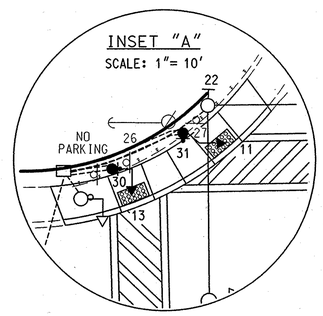

GENERAL NOTES:

1. All underground utilities shown on these plans are schematic only and may not be complete. The contractor shall be responsible for notifying "MISS UTILITY" prior to construction so that all utilities may be located in the field. If the contractor perceives that a conflict between the utilities and the traffic signal will occur, the contractor shall notify the project engineer immediately so that the conflict may be resolved.

2. All Traffic Signal Foundations shall be installed at the Final Sidewalk or Curb grade for closed sections. Highest Roadway Profile Grade for open sections, to meet clearances as specified in MD 816.03, MD 818.01, MD 818.02, and MD 818.04 The contractor shall verify ultimate grades prior to the installation of all signal equipment.

3. If the location of Accessible Pedestrian Signal pushbuttons must be changed the contractor shall notify the Project Engineer to get approval for new location to ensure proper requirements of the MUTCD are still met. All work must be halted until the Project Engineer has obtained an approved location or if necessary a design waiver is obtained.

GEOMETRIC LEGEND

PROPOSED
EXISTING

LEGEND OF UNDERGROUND AND OVERHEAD UTILITIES

AERIAL CABLE — A — A
ELECTRIC — E — E
TELEPHONE — T — T
GAS — G — G
SEWER — S — S
WATER — W — W
CABLE TV — TV — TV

REVISION "A"

STREET TRAFFIC STUDIES, LTD.
400 Crain Hwy.NW.
Glen Burnie,MD 21061
Ph (410) 590-6500
Fax (410) 590-6637

5149.dgn T-32

APPROVALS	REVISIONS
TEAM LEADER	
ASST. DIV.	
DIVISION CHIEF	
OFFICE DIRECTOR	

ORIGINAL ON FILE

(A) AT9105185 10/30/06 INSTALL APS ACROSS RAY RD & COUNTDOWN PED ACOROSS S & W LEGS

JWA

PLOTTED: $DATETIME$
FILE: $FILE$

STATE OF MARYLAND
DEPARTMENT OF TRANSPORTATION
STATE HIGHWAY ADMINISTRATION

MD 212 (RIGGS RD) AND RAY RD

CHILLUM, MARYLAND

TRAFFIC SIGNAL PLAN

SCALE 1"= 20' DATE 9/01/04 CONTRACT NO. AT3565185

DESIGNED BY J ALLEN
DRAWN BY W J NIES
CHECKED BY
F.A.P. NO.

COUNTY PRINCE GEORGE'S
LOGMILE 16021200.60
TIMS NO. H596
TOD NO.

TS NO. 4337A | DRAWING NO. 1 OF 2 | SHEET NO. OF

DRILL HOLES

DRILL HOLES

DRILL HOLES

\\SHA\P\STUDIES\5149.dgn Nov. 01, 2006 08:15:23