F H W A REGION NO.	STATE	FED. AID PROJ. NO.	SHEET NO.	TOTAL SHEETS
3	MD		6	6

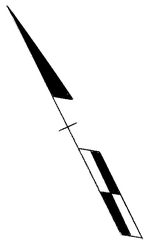

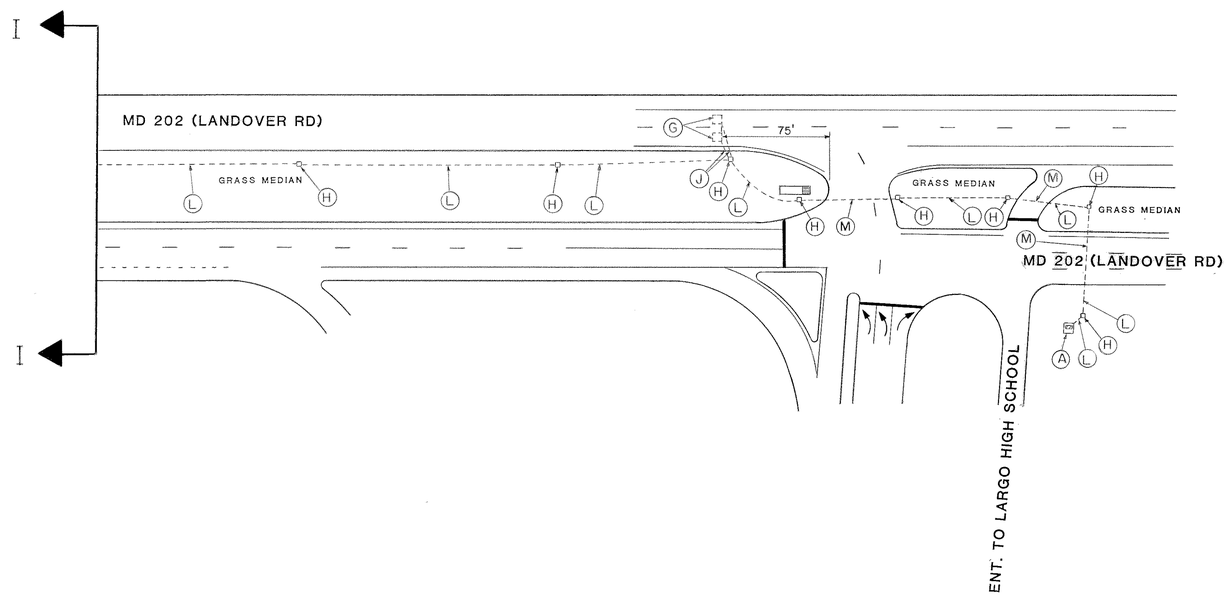

LEGEND OF UNDERGROUND AND OVERHEAD UTILITIES

AERIAL CABLE	—— A —— A —— A —— A
ELECTRIC	—— E —— E —— E —— E
TELEPHONE	—— T —— T —— T —— T
GAS	—— G —— G —— G —— G
SEWER	—— S —— S —— S —— S
WATER	—— W —— W —— W —— W
CABLE TV	—— TV —— TV —— TV —— TV

STREET TRAFFIC STUDIES, LTD.®
Gateway International
1302 Concourse Drive, Suite 104
Linthicum, Maryland 21090
(301) 859-3553

REVISIONS

APPROVALS

CHIEF, SIGNAL DESIGN SECTION 9/10/90

ASST. DISTRICT ENGINEER, TRAFFIC

CHIEF, TRAFFIC ENGINEERING DIVISION 9/10/90

DEPUTY CHIEF ENGINEER, TRAFFIC 9/10/90

MDOT — STATE HIGHWAY ADMINISTRATION
Office of Traffic
TRAFFIC ENGINEERING DIVISION

DRAWN BY: W J NIES (FOR STS)
DES. BY: R R ZACHERL (FOR STS)
CHK. BY: 9/10/90 9-10-90

MD 202 INTERCONNECT SYSTEM
COUNTY PRINCE GEORGE'S

DATE: 8-30-90
SCALE: 1"= 50'
F.A.P. NO.
S.H.A. NO.
TS/STD. NO. 3077 X6
SHEET NO. 6 OF 6

16020207.00