MD 202 IS ASSUMED TO RUN IN AN NORTH-SOUTH DIRECTION

PROPOSED LED SIGNALS

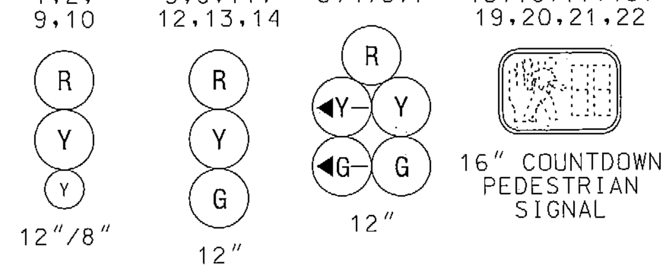

EXISTING OPTICOM DETECTOR

31

EXISTING SIGNALS TO BE REPLACED

9a,10a

12"/8"

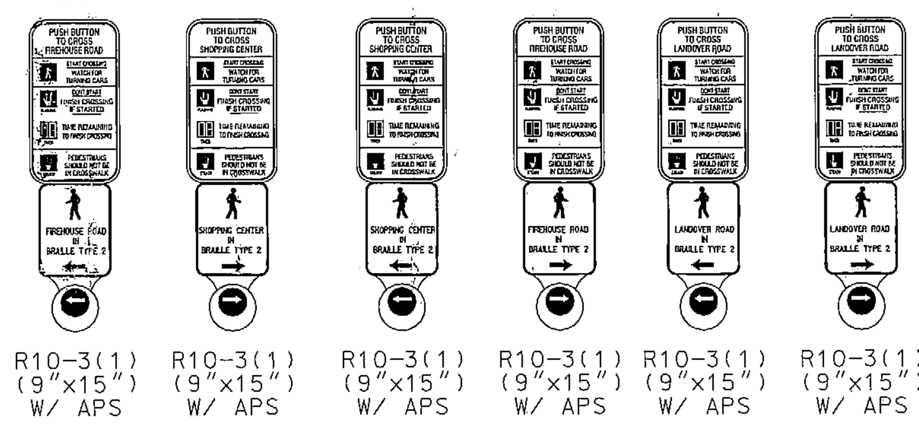

PROPOSED SIGNS

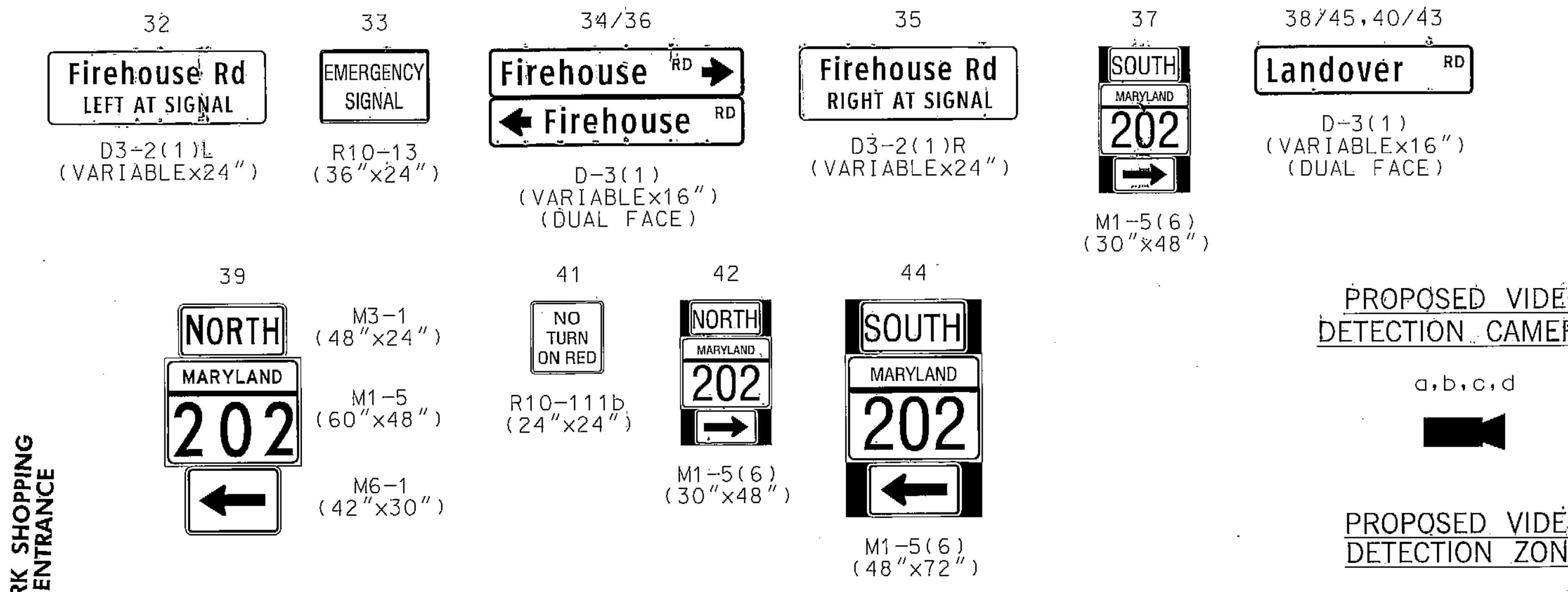

PROPOSED VIDEO DETECTION CAMERAS

a,b,c,d

PROPOSED VIDEO DETECTION ZONE

a

NEMA PHASING

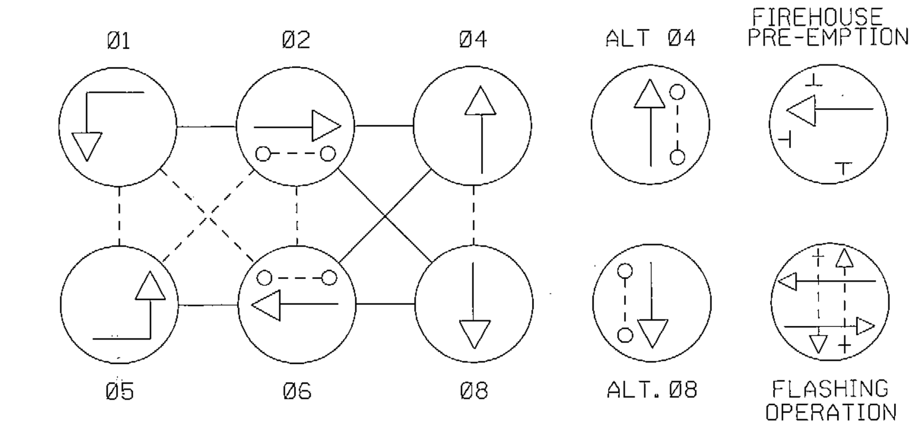

PHASING NOTES:

1. PHASES ASSOCIATED BY A SOLID LINE WILL NOT OPERATE CONCURRENTLY.
2. PHASES ASSOCIATED BY A DASHED LINE MAY OPERATE CONCURRENTLY.

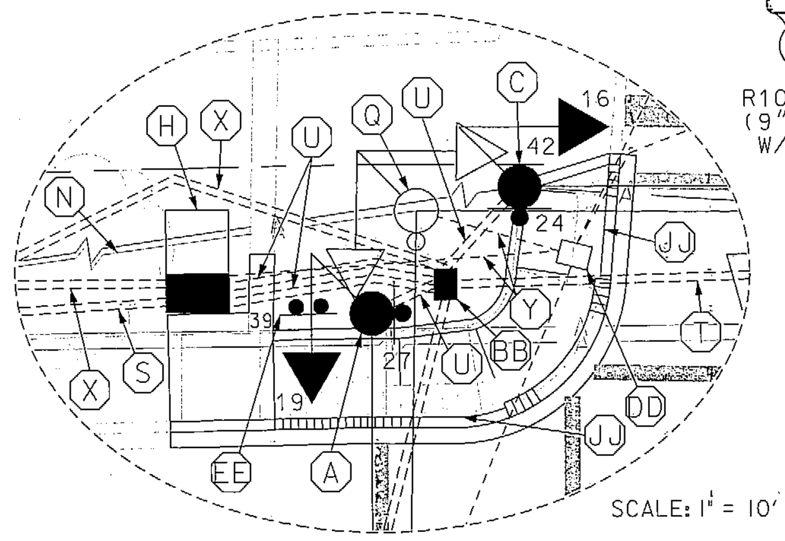
SCALE: 1" = 10'

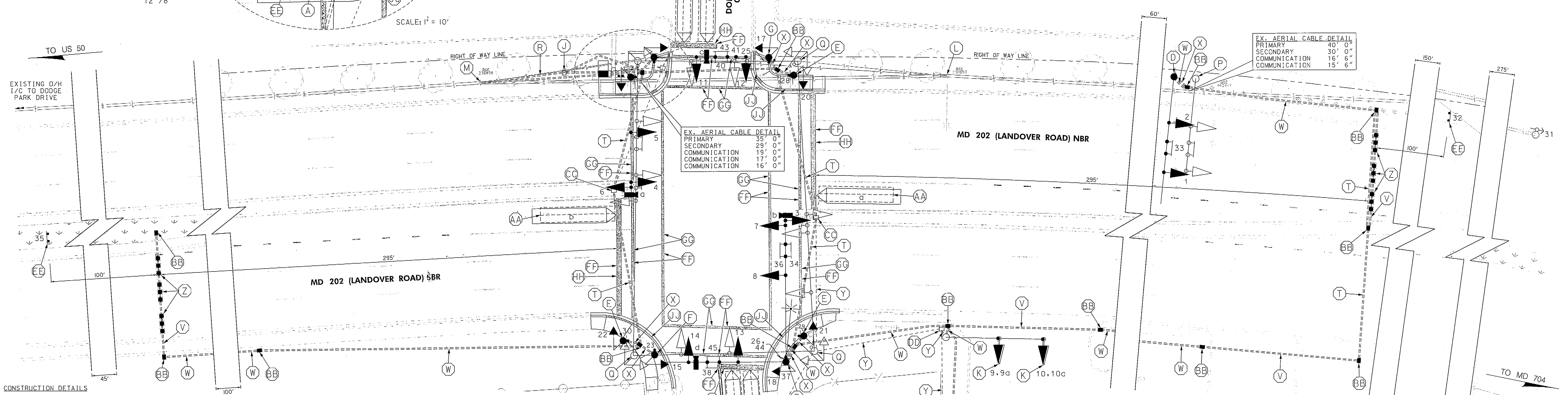

CONSTRUCTION DETAILS

A. INSTALL CONCRETE FOUNDATION AND 15 FT. "T" STEEL POLE WITH 70 FT. MAST ARM, LED TRAFFIC SIGNAL HEADS (MAST ARM MOUNTED), VIDEO DETECTION CAMERA (MAST ARM MOUNTED), LED COUNTDOWN PEDESTRIAN SIGNAL HEAD, AUDIBLE/TACTILE PEDESTRIAN PUSHBUTTON WITH R10-3(1) SIGN (TO READ "PUSH BUTTON TO CROSS LANDOVER ROAD"), AND OVERHEAD SIGN (INSTALL 1-4 IN. SCHEDULE 80, 90 DEGREE PVC ELECTRICAL CONDUIT BEND IN POLE BASE).

B. INSTALL CONCRETE FOUNDATION AND 27 FT. STEEL POLE WITH TWIN 70 FT. AND 50 FT. MAST ARMS, LED TRAFFIC SIGNAL HEADS (MAST ARM MOUNTED AND POLE MOUNTED), VIDEO DETECTION CAMERAS (MAST ARM MOUNTED), 20 FT. LIGHTING ARM WITH 280 WATT LED LUMINAIRE AND PHOTOCELL, LED COUNTDOWN PEDESTRIAN SIGNAL HEAD, AUDIBLE/TACTILE PEDESTRIAN PUSHBUTTON WITH R10-3(1) SIGN (TO READ "PUSH BUTTON TO CROSS FIREHOUSE ROAD"), AND OVERHEAD SIGNS (INSTALL 1-3 IN. AND 1-2 IN. SCHEDULE 80, 90 DEGREE PVC ELECTRICAL CONDUIT BENDS IN POLE BASE).

C. INSTALL CONCRETE FOUNDATION AND 27 FT. STEEL POLE WITH 38 FT. MAST ARM, LED TRAFFIC SIGNAL HEADS (MAST ARM MOUNTED), VIDEO DETECTION CAMERA (MAST ARM MOUNTED), LED COUNTDOWN PEDESTRIAN SIGNAL HEAD, AUDIBLE/TACTILE PEDESTRIAN PUSHBUTTON WITH R10-3(1) SIGN (TO READ "PUSH BUTTON TO CROSS SHOPPING CENTER"), 3 IN. WEATHERHEAD, AND OVERHEAD SIGNS (INSTALL 1-4 IN. SCHEDULE 80, 90 DEGREE PVC ELECTRICAL CONDUIT BEND IN POLE BASE).

D. INSTALL CONCRETE FOUNDATION AND 15 FT. "T" STEEL POLE WITH 50 FT. MAST ARM, LED TRAFFIC SIGNAL HEADS (MAST ARM MOUNTED), AND OVERHEAD SIGN (INSTALL 1-3 IN. AND 1-2 IN. SCHEDULE 80, 90 DEGREE PVC ELECTRICAL CONDUIT BENDS IN POLE BASE).

E. INSTALL CONCRETE FOUNDATION WITH 10 FT. STEEL PEDESTAL POLE WITH MODIFIED BREAKAWAY BASE (STANDARD NO. MD-801.01-01), LED COUNTDOWN PEDESTRIAN SIGNAL HEAD, AND AUDIBLE/TACTILE PEDESTRIAN PUSHBUTTON WITH R10-3(1) SIGN (TO READ "PUSH BUTTON TO CROSS LANDOVER ROAD") (INSTALL 1-2 IN. SCHEDULE 80, 90 DEGREE PVC ELECTRICAL CONDUIT BEND IN POLE BASE).

F. INSTALL CONCRETE FOUNDATION WITH 10 FT. STEEL PEDESTAL POLE WITH MODIFIED BREAKAWAY BASE (STANDARD NO. MD-801.01-01), LED COUNTDOWN PEDESTRIAN SIGNAL HEAD, AND AUDIBLE/TACTILE PEDESTRIAN PUSHBUTTON WITH R10-3(1) SIGN (TO READ "PUSH BUTTON TO CROSS FIREHOUSE ROAD") (INSTALL 1-2 IN. SCHEDULE 80, 90 DEGREE PVC ELECTRICAL CONDUIT BEND IN POLE BASE).

G. INSTALL CONCRETE FOUNDATION WITH 10 FT. STEEL PEDESTAL POLE WITH MODIFIED BREAKAWAY BASE (STANDARD NO. MD-801.01-01), LED COUNTDOWN PEDESTRIAN SIGNAL HEAD, AND AUDIBLE/TACTILE PEDESTRIAN PUSHBUTTON WITH R10-3(1) SIGN (TO READ "PUSH BUTTON TO CROSS SHOPPING CENTER") (INSTALL 1-2 IN. SCHEDULE 80, 90 DEGREE PVC ELECTRICAL CONDUIT BEND IN POLE BASE).

H. REMOVE EXISTING SIGNAL CONTROLLER CABINET. NOTIFY SHA SIGNAL SHOP TO REMOVE THE CONTROLLER AND ALL AUXILIARY EQUIPMENT FROM THE CABINET. INSTALL NEW 4 IN. SCHEDULE 80, 90 DEGREE PVC ELECTRICAL CONDUIT BEND IN EXISTING FOUNDATION. INSTALL NEW NEMA TYPE 'S' BASE MOUNTED CABINET AND CONTROLLER WITH VIDEO DETECTION INTERFACE EQUIPMENT, 2-WIRE CENTRAL CONTROL UNIT, AND ALL ASSOCIATED EQUIPMENT ON EXISTING FOUNDATION.

J. INSTALL 100 AMP METERED SERVICE PEDESTAL (1-4 IN., 3-2 IN., AND 1-1 IN. SCHEDULE 80, 90 DEGREE PVC ELECTRICAL CONDUIT BENDS IN POLE BASE).

K. REMOVE EXISTING SIGNAL HEAD. INSTALL RIGID MAST-ARM MOUNTED LED SIGNAL HEAD.

L. DISCONNECT, PULL BACK, AND REROUTE EXISTING OPTICOM CABLE TO PROPOSED SIGNAL POLE AND TO PROPOSED CABINET.

M. DISCONNECT, PULL BACK, AND REROUTE EXISTING INTERCONNECT CABLE TO PROPOSED SIGNAL POLE AND TO PROPOSED CABINET.

N. DISCONNECT EXISTING OVERHEAD POWER FEED (TO BE DONE BY OTHERS).

P. REMOVE EXISTING STEEL POLE, MAST ARM, AND ALL ASSOCIATED EQUIPMENT. REMOVE FOUNDATION 12 IN. BELOW GRADE AND BACKFILL.

Q. REMOVE EXISTING STEEL STRAIN POLE, SPAN WIRE, AND ALL ASSOCIATED EQUIPMENT. REMOVE FOUNDATION 12 IN. BELOW GRADE AND BACKFILL.

R. INSTALL 4 IN. SCHEDULE 80 PVC ELECTRICAL CONDUIT (TRENCHED) FOR PROPOSED UNDERGROUND ELECTRICAL SERVICE. CAP AND MARK CONDUIT 2 FT. ABOVE GRADE AT BGE 230896 FOR USE BY OTHERS.

S. INSTALL 2 IN. SCHEDULE 80 PVC ELECTRICAL CONDUIT (TRENCHED) FOR PROPOSED UNDERGROUND TELEPHONE SERVICE. CAP AND MARK CONDUIT 2 FT. ABOVE GRADE AT BGE 230896 FOR USE BY OTHERS.

T. INSTALL 4 IN. SCHEDULE 80 PVC ELECTRICAL CONDUIT (BORED).

U. INSTALL 4 IN. SCHEDULE 80 PVC ELECTRICAL CONDUIT (TRENCHED).

V. INSTALL 3 IN. SCHEDULE 80 PVC ELECTRICAL CONDUIT (BORED).

W. INSTALL 3 IN. SCHEDULE 80 PVC ELECTRICAL CONDUIT (TRENCHED).

X. INSTALL 2 IN. SCHEDULE 80 PVC ELECTRICAL CONDUIT (TRENCHED).

Y. CAP AND ABANDON EXISTING CONDUIT.

Z. INSTALL NON-INVASIVE MICROLOOP PROBE SET WITH 1000 FT. LEAD-IN CABLE.

AA. ABANDON EXISTING LOOP DETECTOR. REMOVE ALL ASSOCIATED EXISTING LOOP WIRE.

BB. INSTALL ELECTRICAL HANDHOLE.

CC. USE EXISTING HANDHOLE.

DD. REMOVE EXISTING HANDHOLE.

EE. INSTALL GROUND MOUNTED SIGN ON 2-4"x6" WOOD SUPPORTS.

FF. REMOVE EXISTING PAVEMENT MARKINGS.

GG. INSTALL 12 IN. WHITE PREFORMED THERMOPLASTIC PAVEMENT MARKING LINE FOR CROSSWALK IN SAME LOCATION AS EXISTING.

HH. INSTALL 24 IN. WHITE PREFORMED THERMOPLASTIC PAVEMENT MARKING LINE FOR STOPLINE IN SAME LOCATION AS EXISTING.

JJ. INSTALL SIDEWALK RAMP (STANDARD NO. MD-655.12) AND DETECTABLE WARNING SURFACE (STANDARD NO. MD-655.40).

KK. DISCONNECT, PULL BACK, AND REROUTE EXISTING PRE-EMPTION CABLE TO PROPOSED CABINET.

McCormick Taylor
Engineers & Planners Since 1946
509 South Exeter Street
4th Floor
Baltimore, Maryland 21202
(410) 662-7400

BY: bshanover

0 10 20 40

SCALE: 1" = 20'

GEOMETRIC LEGEND

EXISTING
PROPOSED

UTILITY LEGEND

STORM DRAIN
GAS MAIN
WATER MAIN
SEWER MAIN
ELECTRIC CABLES
AERIAL CABLES
TELEPHONE CABLES
FIBER-OPTIC

GENERAL NOTES

1. ALL UNDERGROUND AND OVERHEAD UTILITIES SHOWN ON THESE PLANS ARE SCHEMATIC ONLY AND MAY NOT BE COMPLETE. THE CONTRACTOR SHALL BE RESPONSIBLE FOR NOTIFYING MISS UTILITY PRIOR TO CONSTRUCTION SO THAT ALL UTILITIES MAY BE LOCATED IN THE FIELD. IF THE CONTRACTOR PERCEIVES THAT A CONFLICT BETWEEN UTILITIES AND THE TRAFFIC SIGNAL WILL OCCUR, THE CONTRACTOR SHALL NOTIFY THE PROJECT ENGINEER IMMEDIATELY SO THAT THE CONFLICT MAY BE RESOLVED.
2. THE CONTRACTOR SHALL REPAIR ANY DAMAGE TO ANY SIDEWALKS CAUSED BY THE INSTALLATION OR REMOVAL OF SIGNAL EQUIPMENT.
3. ALL SIGNAL FOUNDATIONS SHALL BE INSTALLED AT THE FINAL SIDEWALK OR CURB GRADE TO MEET CLEARANCES AS SPECIFIED IN MD 816.01, MD 818.02, AND MD 818.04. THE CONTRACTOR SHALL VERIFY ULTIMATE LOCATIONS AND GRADES PRIOR TO THE INSTALLATION OF ALL SIGNAL EQUIPMENT.
4. HANDHOLES FOR NONINVASIVE MICROLOOP CONDUIT SHALL BE INSTALLED WITH THE LONG DIMENSION PERPENDICULAR TO THE ROADWAY.
5. THE CONTRACTOR SHALL BE RESPONSIBLE FOR TERMINATING ALL SIGNAL CABLE TO THE APPROPRIATE TERMINALS AND SHALL PROPERLY LABEL EACH CABLE. ALL UNUSED SIGNAL CABLE SHALL BE PROPERLY REMOVED AND DISPOSED.
6. ALL EXISTING TRAFFIC EQUIPMENT REMOVED SHALL BECOME THE PROPERTY OF THE SIGNAL CONTRACTOR UPON COMPLETION OF THE NEW SIGNAL.
7. PUSHBUTTON ARROWS ARE TO BE PARALLEL TO THE CROSSING FOR WHICH THEY ARE INTENDED.
8. LOCATION OF ACCESSIBLE PEDESTRIAN SIGNAL PUSHBUTTONS MUST MEET LOCATION REQUIREMENTS OF THE LATEST MD-MUTCD CHAPTER 4 *PEDESTRIAN CONTROL FEATURES*, SEC. 4E.08 AND THE LATEST NCHRP PUBLICATION, "ACCESSIBLE PEDESTRIAN SIGNALS: GUIDE TO BEST PRACTICE". NOTE: SHOULD FIELD CONDITIONS OBSTRUCT PROPER EQUIPMENT LOCATIONS, THE CONTRACTOR SHALL STOP ALL WORK AND NOTIFY THE SHA ENGINEER FOR REVIEW. AN ALTERNATE DESIGN WAVIER MAY BE NECESSARY AND OBTAINED FOR APPROVAL BY THE DIRECTOR, OFFICE OF TRAFFIC & SAFETY.
9. PUSHBUTTONS ARE TO BE LOCATED SO THAT THEY CAN BE ACTIVATED BY A PERSON IN A WHEELCHAIR REACHING LESS THAN 18 INCHES FROM A 60-INCH BY 60-INCH LEVEL LANDING AREA WITH A CROSS SLOPE OF LESS THAN OR EQUAL TO 2 PERCENT.
10. THE 10-FOOT SEPARATION BETWEEN PUSHBUTTONS IS TO BE MEASURED FROM THE FACE OF THE PUSHBUTTON TO THE FACE OF PUSHBUTTON, NOT FROM CENTER OF POLE TO CENTER OF POLE.
11. REFER TO GEOMETRIC DETAIL SHEET NO. 3 FOR CURB RAMP DETAILS AND SIGNAL DIMENSIONS.

APPROVALS

TEAM LEADER
ASST. DIV. CHIEF
DIVISION CHIEF
OFFICE DIRECTOR

ORIGINAL ON FILE

REVISIONS

E	FULL TRAFFIC SIGNAL RECONSTRUCTION	05/02/13 SHA NO. XY1515185 TIMS NO. L803
BSH	[illegible] MLP	
D	REVISED FOR BRICK PAVER CROSSWALKS	12/97
	MAR	
C	INSTALL CROSSWALKS AND PED. PUSHBUTTONS, SIGNALS AND SIGNS	9-91
JA		

STATE OF MARYLAND
DEPARTMENT OF TRANSPORTATION
STATE HIGHWAY ADMINISTRATION
OFFICE OF TRAFFIC & SAFETY
TRAFFIC ENGINEERING DESIGN DIVISION

MD 202 (LANDOVER ROAD) AT FIREHOUSE ROAD

GREATER LANDOVER, MARYLAND

TRAFFIC SIGNALIZATION PLAN

SCALE 1" = 20' DATE 7/18/91 CONTRACT NO. P-346-1-385

DESIGNED BY
DRAWN BY S. REYNA
CHECKED BY
F.A.P. NO.

COUNTY PRINCE GEORGE'S
LOGMILE 16020211.35
T.I.M.S. NO.
T.O.D. NO.

T.S. NO. 429E SG-01 OF SG-03 SHEET NO. 1 OF 3

PLOTTED: Friday, May 17, 2013 AT 08:24 AM
FILE: I:\5212 - TEDD\15 (PB 120) - MD 202 Signals\Design\Engineering\PlanSet\pSG-P001_TS429E.dgn