MD 202 IS ASSUMED TO RUN IN A NORTH-SOUTH DIRECTION.

PROPOSED SIGNALS

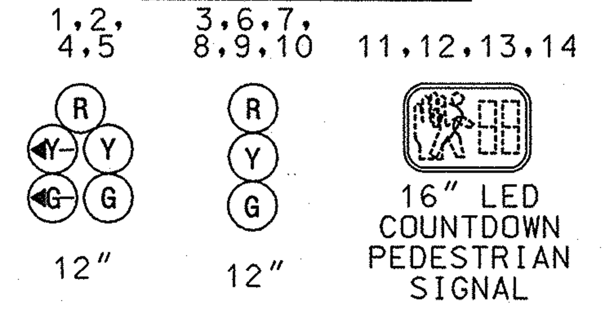

PROPOSED VIDEO DETECTION CAMERA

a,b,c,d,e,f

PROPOSED SIGNS

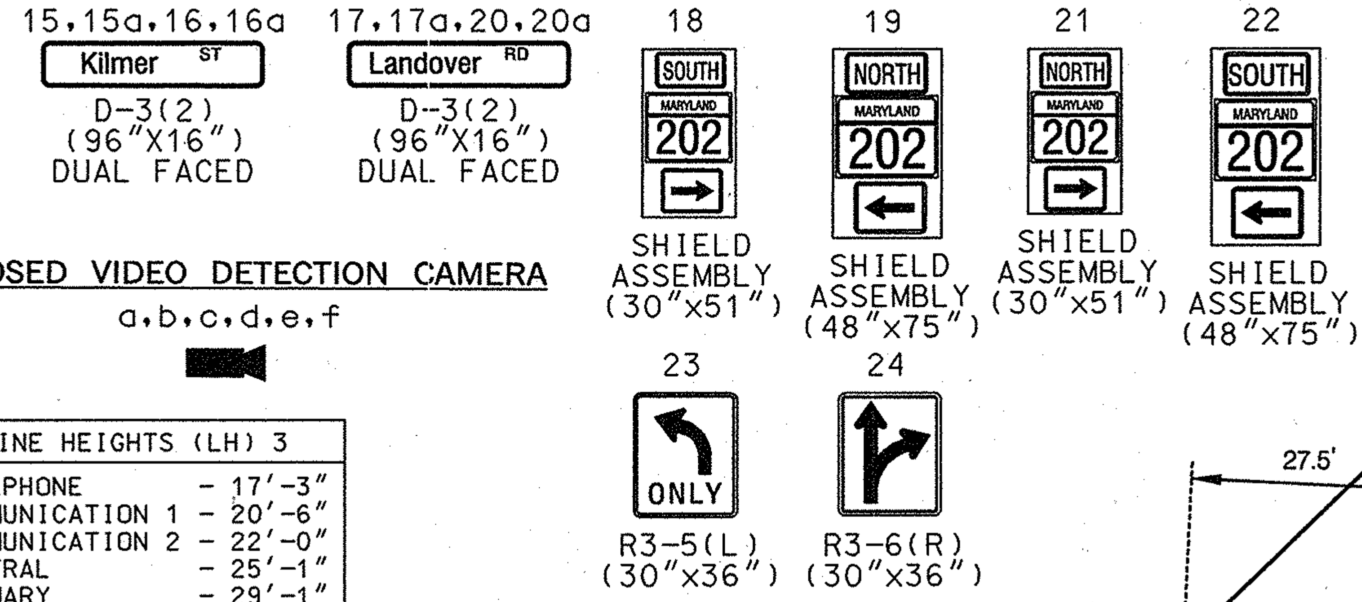

PROPOSED ACCESSIBLE PEDESTRIAN PUSHBUTTON AND SIGN

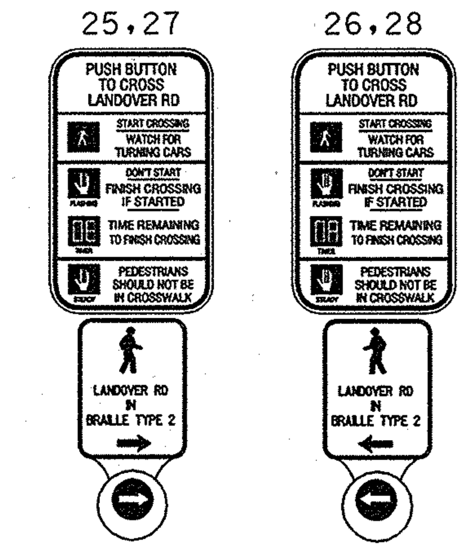

NEMA PHASING

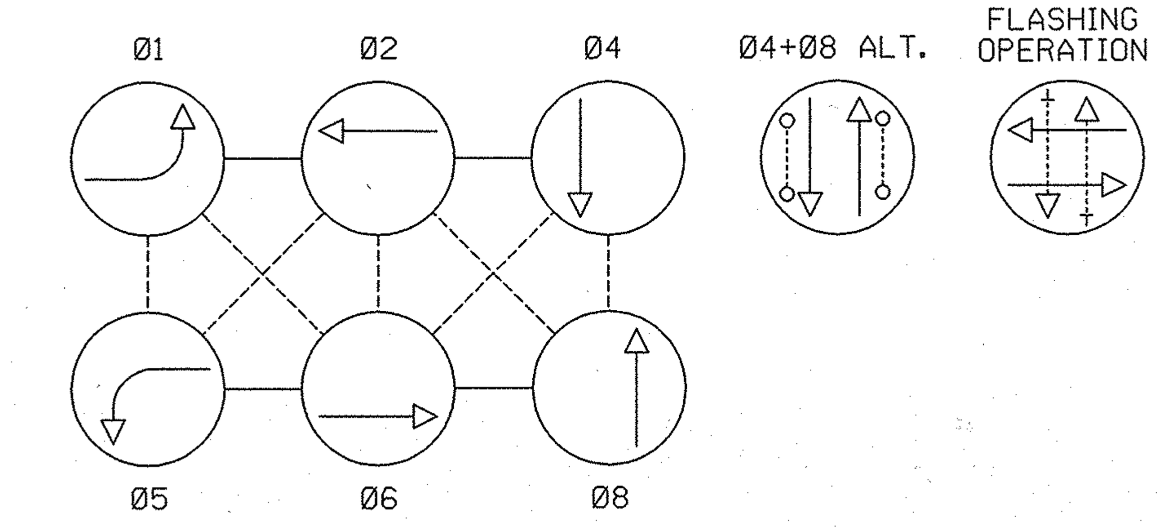

NOTE:
PHASES ASSOCIATED BY A DASHED LINE MAY/WILL OPERATE CONCURRENTLY.
PHASES ASSOCIATED BY A SOLID LINE WILL NOT OPERATE CONCURRENTLY.

LINE HEIGHTS (LH) 1	
COMMUNICATION 1	- 19'-7"
COMMUNICATION 1	- 20'-1"
COMMUNICATION 2	- 21'-0"
COMMUNICATION 3	- 21'-10"
NEUTRAL	- 26'-1"
PRIMARY	- 31'-4"
PRIMARY	- 40'+

LINE HEIGHTS (LH) 2	
COMMUNICATION 1	- 24'-11"
NEUTRAL	- 34'-0"
PRIMARY	- 40'+

LINE HEIGHTS (LH) 3	
TELEPHONE	- 17'-3"
COMMUNICATION 1	- 20'-6"
COMMUNICATION 2	- 22'-0"
NEUTRAL	- 25'-1"
PRIMARY	- 29'-1"
PRIMARY	- 40'+

LINE HEIGHTS (LH) 4	
NEUTRAL	- 24'-9"
PRIMARY	- 31'-6"
PRIMARY	- 40'+

LINE HEIGHTS (LH) 5	
COMMUNICATION 1	- 22'-9"
NEUTRAL	- 28'-7"
PRIMARY	- 40'+

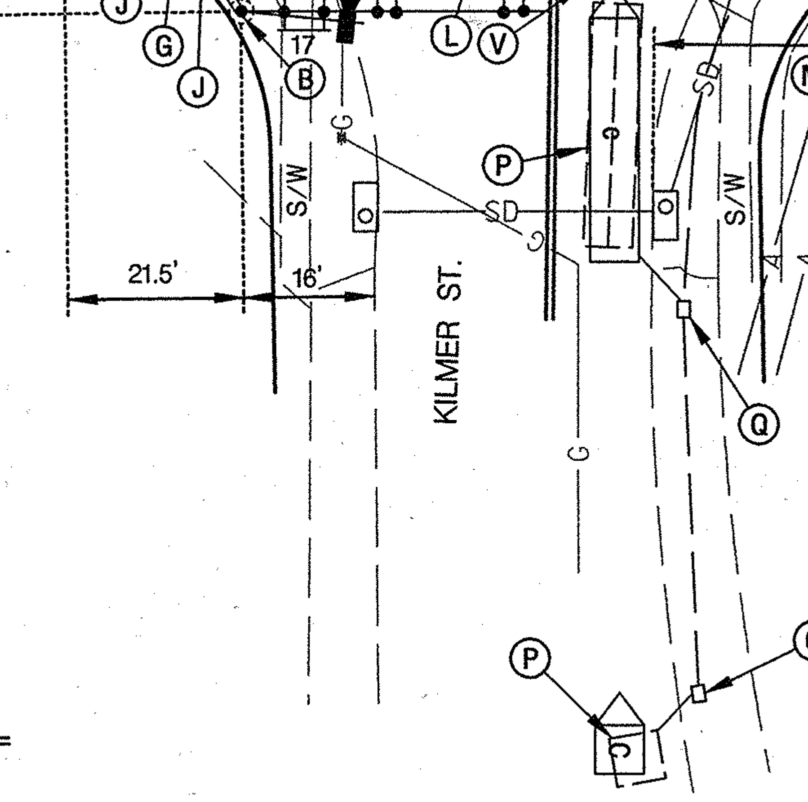

CONSTRUCTION DETAILS

A. INSTALL NEMA SIZE "6" BASE MOUNTED CABINET AND CONTROLLER WITH ALL NECESSARY EQUIPMENT (NOTE: 2-2 IN. AND 2-4 IN. 90 DEGREE BENDS).
B. INSTALL A 27 FT. STEEL POLE WITH FOUNDATION, 38 FT. MAST ARM, LED TRAFFIC SIGNAL HEADS, SIGNS AND A 15 FT. LIGHTING ARM WITH VIDEO DETECTION CAMERA. (NOTE: 1-3 IN. 90 DEGREE PVC BEND).
C. INSTALL A 16.5 FT. STEEL POLE WITH FOUNDATION, 60 FT. 'T' DIMENSION MAST ARM, VIDEO DETECTION CAMERAS, LED TRAFFIC SIGNAL HEADS, LED COUNTDOWN PEDESTRIAN SIGNAL HEAD AND SIGNS (NOTE: 1-3 IN. 90 DEGREE PVC BEND). (SEE NOTES 22 AND 23).
D. INSTALL A 27 FT. STEEL POLE WITH FOUNDATION, 50 FT. MAST ARM, LED TRAFFIC SIGNAL HEADS, SIGNS AND A 15 FT. LIGHTING ARM WITH 250 WATT HPS LUMINAIRE AND VIDEO DETECTION CAMERAS. (NOTE: 1-3 IN. 90 DEGREE PVC BEND).
E. INSTALL A 10 FT. BREAKAWAY PEDESTAL POLE WITH SPECIAL FOUNDATION (SHA STD. MD 801-01.01), LED COUNTDOWN PEDESTRIAN SIGNAL HEAD, ACCESSIBLE PUSHBUTTON AND R10-3(1) SIGN TO READ "PUSH BUTTON TO CROSS LANDOVER ROAD" (NOTE: 1-3 INCH PVC 90 DEGREE BEND).
F. INSTALL A 5 FT. BREAKAWAY PEDESTAL POLE WITH SPECIAL FOUNDATION (SHA STD. MD 801-01.01), ACCESSIBLE PEDESTRIAN PUSHBUTTON AND R10-3(1) SIGN TO READ "PUSHBUTTON TO CROSS LANDOVER ROAD" (NOTE: 1-3 IN. 90 DEGREE PVC BEND)
G. INSTALL ELECTRICAL HANDHOLE.
H. INSTALL 2 IN. SCHEDULE 80 RIGID PVC ELECTRICAL CONDUIT (TRENCHED).
J. INSTALL 3 IN. SCHEDULE 80 RIGID PVC ELECTRICAL CONDUIT (TRENCHED)
K. INSTALL 4 IN. SCHEDULE 80 RIGID PVC ELECTRICAL CONDUIT (TRENCHED).
L. INSTALL 4 IN. SCHEDULE 80 RIGID PVC ELECTRICAL CONDUIT (SLOTTED). BORE CONDUIT UNDER MEDIAN.
M. INSTALL GROUND MOUNTED SIGN(S) ON TWO 4 IN. X 6 IN. WOOD POSTS.
N. INSTALL GROUND MOUNTED SIGN ON ONE 4 IN. x 6 IN. WOOD POST.
O. REMOVE AND DISPOSE OF EXISTING TRAFFIC SIGNAL EQUIPMENT. REMOVE EXISTING CONDUIT. REMOVE FOUNDATION 12 IN. BELOW GRADE.
P. ABANDON EXISTING LOOP DETECTOR.
Q. REMOVE EXISTING ELECTRICAL HANDHOLE AND BACKFILL WITH SELECT BORROW. ABANDON EXISTING CONDUIT AND REMOVE ALL UNUSED WIRE.
R. USE EXISTING HANDHOLE.
S. INSTALL 1-2 IN. AND 1-3/4 IN. (FOR GROUND FIELD) 90 DEGREE PVC BENDS INTO EXISTING METERED SERVICE PEDESTAL FOUNDATION. ONCE POWER IS SWITCHED FROM THE OLD TO THE NEW CABINET, REUSE 1-2 IN.90 DEGREE PVC BEND (FOR LIGHT WIRE CONDUIT TO ADJACENT HANDHOLE). REMOVE AND REINSTALL CONCRETE COLLAR.
T. REMOVE EXISTING SIDEWALK RAMP(S). CONSTRUCT NEW SIDEWALK RAMP(S) WITH DETECTABLE WARNING SURFACE SHA STD. MD 655.40 (SEE DETAIL THIS SHEET).
U. REMOVE EXISTING PAVEMENT MARKINGS AND INSTALL 12 IN. HEAT APPLIED WHITE PERMANENT PREFORMED THERMOPLASTIC PAVEMENT MARKINGS FOR CROSSWALK IN EXISTING LOCATION.
V. REMOVE EXISTING PAVEMENT MARKINGS AND INSTALL 24 IN. HEAT APPLIED WHITE PERMANENT PREFORMED THERMOPLASTIC PAVEMENT MARKINGS FOR STOPLINE IN EXISTING LOCATION.
W. INSTALL 3 IN. PVC CONDUIT RISER ON EXISTING UTILITY POLE WITH 1-3 IN. WEATHER HEAD.
X. INSTALL 2 IN. SCHEDULE 80 RIGID PVC ELECTRICAL CONDUIT (TRENCHED) - FOR PROPOSED UNDERGROUND TELEPHONE SERVICE. CAP AND MARK CONDUIT, AND LEAVE A 1 FT. STUB WITH PULL STRING AT UTILITY POLE FOR USE BY OTHERS.

TOD NO:XX445-09
SHA NO PG719A55/B55
MD 202@ KILMER ST

TYPICAL SIDEWALK RAMP DETAIL

(NOT TO SCALE)

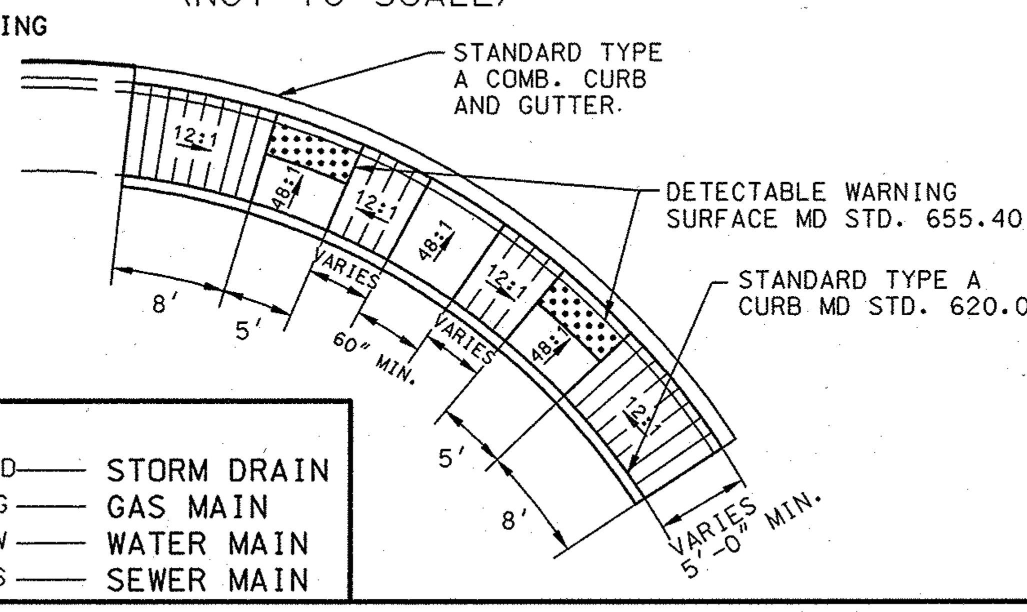

GENERAL NOTES

1. MAINTENANCE OF TRAFFIC WILL BE HANDLED BY THE CONTRACTOR UTILIZING MDSHA STANDARD TYPICALS FOR TRAFFIC CONTROL.
2. THE CONTRACTOR SHALL CONTACT MISS UTILITY TO VERIFY ALL UNDERGROUND UTILITIES PRIOR TO THE INSTALLATION OF PROPOSED SIGNAL EQUIPMENT. IF ANY UTILITY CONFLICTS ARISE THE CONTRACTOR SHALL CONTACT THE PROJECT ENGINEER.
3. WITHIN 36 IN. OF UNDERGROUND UTILITY LOCATIONS, THE CONTRACTOR SHALL BE REQUIRED TO EXCAVATE FOR FOUNDATION AND CONDUIT BY HAND.
4. ALL TRAFFIC SIGNAL FOUNDATIONS SHALL BE INSTALLED AT THE FINAL SIDEWALK OR CURB GRADE FOR CLOSED SECTIONS, HIGHEST ROADWAY PROFILE GRADE FOR OPEN SECTIONS, TO MEET CLEARANCES AS SPECIFIED IN MD 816.03, MD 818.01, MD 818.02, MD 818.04. THE CONTRACTOR SHALL VERIFY ULTIMATE GRADES PRIOR TO THE INSTALLATION OF ALL SIGNAL EQUIPMENT.
5. THE CONTRACTOR SHALL INTEGRATE PROPOSED/EXISTING CONCRETE FOUNDATIONS WITH NEW CURB/SIDEWALK RAMP WHERE NECESSARY.
6. THE SHA SIGNAL SHOP WILL BE RESPONSIBLE FOR ALL INTERNAL CABINET WIRING. THE CONTRACTOR SHALL BE RESPONSIBLE FOR ROUTING AND PROPERLY LABELING ALL SIGNAL CABLES.
7. THE CONTRACTOR SHALL REMOVE AND DISPOSE OF ALL ABANDONED ELECTRICAL CABLES.
8. THE LOCATION OF ACCESSIBLE PEDESTRIAN SIGNAL PUSHBUTTONS MUST MEET LOCATION REQUIREMENTS OF MUTCD SEC. 4E.09 AND FIG. 4E.2; AND THE NCHRP PUBLICATION, "ACCESSIBLE PEDESTRIAN SIGNALS: GUIDE TO BEST PRACTICE." IF NOT MET, THE CONTRACTOR IS TO STOP WORK ON PUSHBUTTON LOCATIONS UNTIL THE CONFLICT HAS BEEN RESOLVED. IF NEEDED, A DESIGN WAIVER SHALL BE OBTAINED, APPROVED BY THE DIRECTOR, OFFICE OF TRAFFIC AND SAFETY.
9. PUSHBUTTON IS TO BE LOCATED SO THAT A PEDESTRIAN IN A WHEELCHAIR LOCATED ON THE LEVEL LANDING AREA DOES NOT HAVE TO REACH MORE THAN 18 IN.
10. PUSHBUTTONS ARE TO BE LOCATED SO THAT THEY CAN BE ACTIVATED BY A PERSON IN A WHEELCHAIR FROM A 60 IN. x 60 IN. LEVEL LANDING AREA. A LEVEL LANDING AREA IS AN AREA WITH A CROSS SLOPE OF LESS THAN OR EQUAL TO 2%.
11. THE 10 FT. MINIMUM SEPARATION BETWEEN PUSHBUTTONS IS TO BE MEASURED FROM FACE OF PUSHBUTTON TO FACE OF PUSHBUTTON, NOT CENTER OF POLE TO CENTER OF POLE.
12. PUSHBUTTON ARROWS ARE TO BE PARALLEL TO THE CROSSING FOR WHICH THEY ARE INTENDED.
13. ALL ACCESSIBLE PEDESTRIAN CONTROL EQUIPMENT SHALL BE DELIVERED TO THE SHA SIGNAL SHOP FOR TESTING AND PROGRAMMING PRIOR TO INSTALLATION. CONTACT MR. EDWARD RODENHIZER AT 410-787-7650 TO COORDINATE.
14. THE CONTRACTOR SHALL INSTALL ALL CONDUIT PRIOR TO SIDEWALK AND RAMP CONSTRUCTION.
15. THE CONTRACTOR SHALL REMOVE AND REPLACE CONCRETE SIDEWALK AT THE NEAREST JOINT.
16. THE CONTRACTOR SHALL ENSURE THE EXISTING TRAFFIC SIGNAL REMAINS OPERATIONAL UNTIL RECONSTRUCTED TRAFFIC SIGNAL IS OPERATIONAL.
17. THE CONTRACTOR SHALL MAINTAIN PEDESTRIAN ACCESS THROUGH THE INTERSECTION DURING CONSTRUCTION WITH NECESSARY DETOURS AT THE DISCRETION OF THE PROJECT ENGINEER.
18. ALL PROPOSED LUMINAIRES SHALL BE SUPPLIED WITH A PHOTOCELL.
19. THE CONTRACTOR SHALL CONTACT CHIEF JEFFERY KRAUSS OF PRINCE GEORGE'S COUNTY AT 301-773-8362 TO COORDINATE THE REWIRING OF THE EXISTING RED LIGHT CAMERAS.
20. VIDEO CAMERA LOCATION/ALIGNING SHALL BE COORDINATED WITH THE SHA ENGINEER.
21. THE SHA SIGNAL SHOP WILL PROGRAM VIDEO DETECTION CAMERAS 'C' AND 'D' TO PICK UP PRESENCE AND SETBACK DETECTION.
22. DISTRICT MAINTENANCE WILL TRIM TREES IN THE NORTHWEST CORNER AS NECESSARY TO AVOID SIGNAL POLE CONFLICTS.
23. THE CONTRACTOR SHALL STABILIZE THE SLOPE FOR SIGNAL POLE 'C' AT THE DIRECTION OF THE ENGINEER. THE COST TO PERFORM THIS WORK WILL BE INCIDENTAL TO THE SIGNAL POLE INSTALLATION.

UTILITY LEGEND

—E—E'—	ELECTRIC CABLES	—SD—SD—	STORM DRAIN
—A—A—	AERIAL CABLES	—G—G—	GAS MAIN
—T—T—	TELEPHONE CABLES	—W—W—	WATER MAIN
—F—F—	FIBER-OPTIC	—S—S—	SEWER MAIN

BY: thompsma

STV Incorporated
engineers /architects /planners /construction managers
7125 Ambassador Road Baltimore, MD 21244-2722 (410) 944-9112

APPROVALS
TEAM LEADER
ASST. DIV. CHIEF
DIVISION CHIEF
OFFICE DIRECTOR

ORIGINAL ON FILE

REVISIONS
L RECONSTRUCT TRAFFIC SIGNAL, INSTALL APS AND COUNTDOWN PED. SIGNALS. SHA#: XX4455185 9/2008 STV MCG CJW
K UPGRADE RED LIGHT CAMERA 12-21-2004 TIMS #G755
J 4-2004 ADD NEARSIDE SIGNALS F/MD202 CHANGE ALL SIGNAL HEADS FROM YELLOW TO BLACK FACED SHA #AT2885185

SHA
STATE OF MARYLAND
DEPARTMENT OF TRANSPORTATION
STATE HIGHWAY ADMINISTRATION
OFFICE OF TRAFFIC & SAFETY
TRAFFIC ENGINEERING DESIGN DIVISION

MD 202 (LANDOVER ROAD) AT KILMER STREET

SIGNALIZATION PLAN SHEET

SCALE 1" = 20' ADVERTISED DATE 07-09-1971 CONTRACT NO. P-317X-000-385

DESIGNED BY		COUNTY	PRINCE GEORGE'S
DRAWN BY	W. FITCH	LOGMILE	16020212.59
CHECKED BY	R.W. TYSON	TIMS NO.	I594
F.A.P. NO.	SEE TITLE SHEET	TOD NO.	N/A

TS NO. 310L | DRAWING SG-01 OF 02 | SHEET NO. 1 OF 2

PLOTTED: Monday, September 15, 2008 AT 04:01 PM
FILE: I:\PROJECTS\0312513\0312513_0093\Drawings\TRA\pSG-P000_md202.dgn