NOTE: MD 201 IS ASSUMED TO RUN IN A NORTH-SOUTH DIRECTION

SIGNS

9 — LEFT TURN YIELD ON GREEN — R10-12 36"x 42"

10,14 — ONLY — R3-5L 30"x 36"

15 — ONLY — R3-5R 30"x 36"

11a,11b — Cherrywood LN — D3-2 (DUAL-FACED) VARIABLE X 16"

12 — Cherrywood LN — D3-2 (VARIABLE X 16"

13 — TO INTERSTATE 95 INTERSTATE 495 — M4-5, M1-1, M1-1, M6-1

ASSOCIATED SHIELD ASSEMBLY

SIGNALS

1,2 — R, Y, G — 12"

3-8 — R, Y, G — 12"

NEMA PHASING

Ø1 Ø2 Ø4 Ø6

FLASHING OPERATION

PHASING NOTES:
1.) PHASES ASSOCIATED BY A DASHED LINE WILL OPERATE CONCURRENTLY
2.) PHASES ASSOCIATED BY A SOLID LINE WILL NOT OPERATE CONCURRENTLY

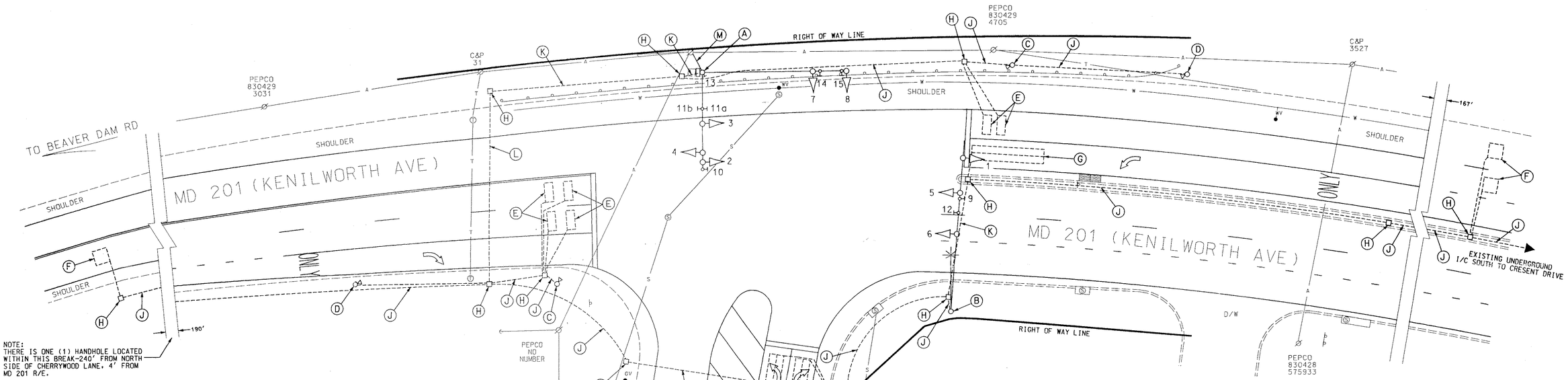

NOTE:
THERE IS ONE (1) HANDHOLE LOCATED WITHIN THIS BREAK-240' FROM NORTH SIDE OF CHERRYWOOD LANE, 4' FROM MD 201 R/E.

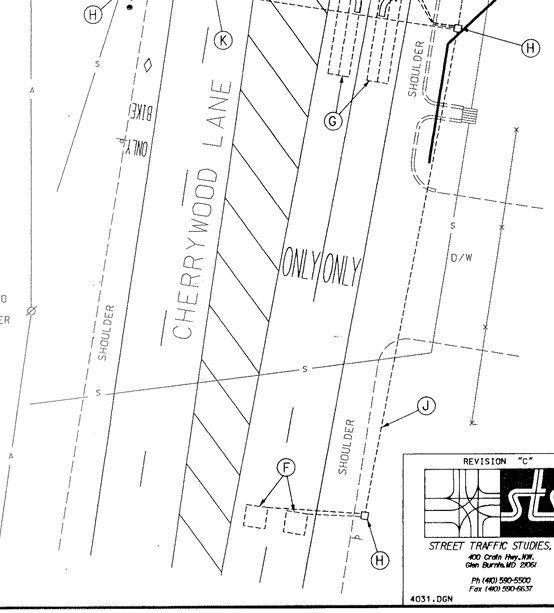

EQUIPMENT DETAILS

A. 23' steel pole with twin 60'-40' mast arms, control and distribution, traffic signal heads and signs (Note: 1-3", 90° PVC (Schedule 80) bend).

B. 27' steel pole with a 70' mast arm, traffic signal heads, signs, and a 20' lighting arm with a 250W-HPS luminaire (Note: 1-2", 90° PVC (Schedule 80) bend).

C. 10' breakaway pole with remote flash (Note: 1-2" PVC (Schedule 80) bend.

D. 10' breakaway pole with red light camera (Note: 1-2" PVC (Schedule 80) bend.

E. 3.5' x 8' loop detector encased in 1/4" flexible tubing (4-turns).

F. 6' x 6' loop detector encased in 1/4" flexible tubing (4-turns).

G. 6' x 30' loop detector encased in 1/4" flexible tubing quadrupole type (3-6-3).

H. Handhole.

J. 2" polyvinyl chloride electrical conduit (Schedule 80).

K. 3" polyvinyl chloride electrical conduit (Schedule 80).

L. 3" galvanized steel electrical conduit .

M. Overhead electrical service by PEPCO.

GENERAL NOTES:

1. This plan reflects only those underground utilities that were apparent at the time of this location being asbuilt. A detailed review was not undertaken and the plan should not be construed as representing all underground utilities in the area.
2. Any modification to this subject signal should be preceded by a thorough identification of all existing utilities.

GEOMETRIC LEGEND
PROPOSED
EXISTING

LEGEND OF UNDERGROUND AND OVERHEAD UTILITIES

AERIAL CABLE	A
ELECTRIC	E
TELEPHONE	T
GAS	G
SEWER	S
WATER	W
CABLE TV	TV

REVISION "C"

STREET TRAFFIC STUDIES, LTD.
400 Crain Hwy. NW.
Glen Burnie, MD 21061
Ph (410) 590-5500
Fax (410) 590-6637

4031.DGN

REVISIONS		
C	8-07-01	ASBUILT FOR RED LIGHT CAMERA INSTALLATION SHA NO.:
RRZ		
B	5-12-98	SIGNAL MODIFICATION DUE TO NEW GEOMETRICS SHA NO.: BW996MB2
HC		
A	12-30-97	SHA GEOMETRIC WIDENING SHA NO.: PG214B21
DCI		

APPROVALS

TEAM LEADER, TRAFFIC ENGINEERING DESIGN DIVISION

ASST. CHIEF, TRAFFIC ENGINEERING DESIGN DIVISION

CHIEF, TRAFFIC ENGINEERING DESIGN DIVISION

DIRECTOR, TRAFFIC & SAFETY

ORIGINAL ON FILE

MARYLAND DOT - STATE HIGHWAY ADMINISTRATION
Office of Traffic & Safety
TRAFFIC ENGINEERING DESIGN DIVISION

MD 201 (KENILWORTH AVE) AND CHERRYWOOD LANE

DRAWN BY:		F.A.P. NO.		TS NO. 3405C	SHEET NO.
CHECKED BY:	DBD	S.H.A. NO.			
SCALE:	1"= 20'	COUNTY:	PRINCE GEORGE'S	T.I.M.S. NO.	1 OF 1
DATE:		LOG MILE:	16020107.92		

m:\signaldesign\4031\4031.dgn Sep. 19, 2001 15:01:24