DRILL HOLES

BORDER REV: DATE: June 1, 2004

NOTE: MD 198 IS CONSIDERED TO RUN IN AN EAST-WEST DIRECTION

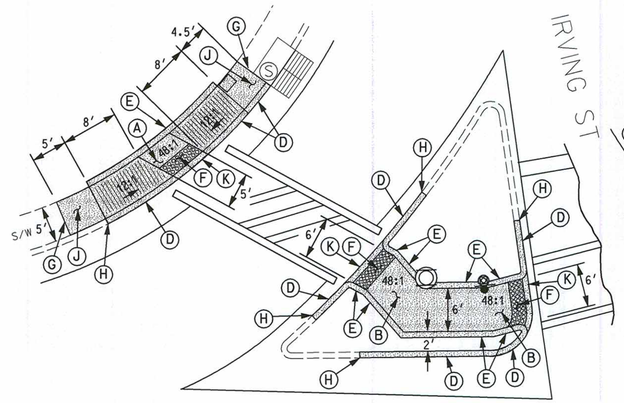

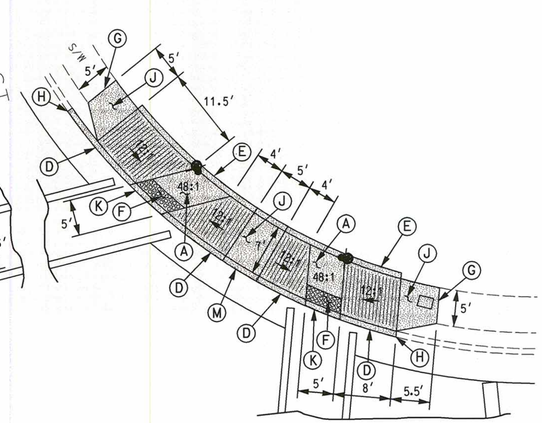

CROSSWALK / CROSSHATCH TYPICAL

SCALE: 1"= 5'

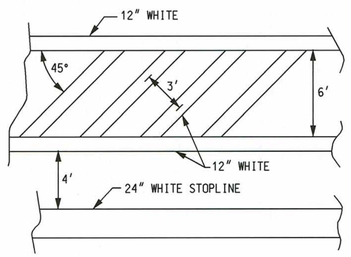

NOTES:
1.) THE PROPOSED CROSSWALKS ARE TO BE CENTERED ON THE PROPOSED ADA RAMPS
2.) THE PROPOSED CROSSWALK ACROSS MD 198 DOES NOT HAVE CROSSHATCHING

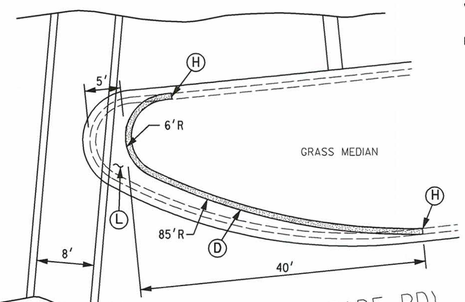

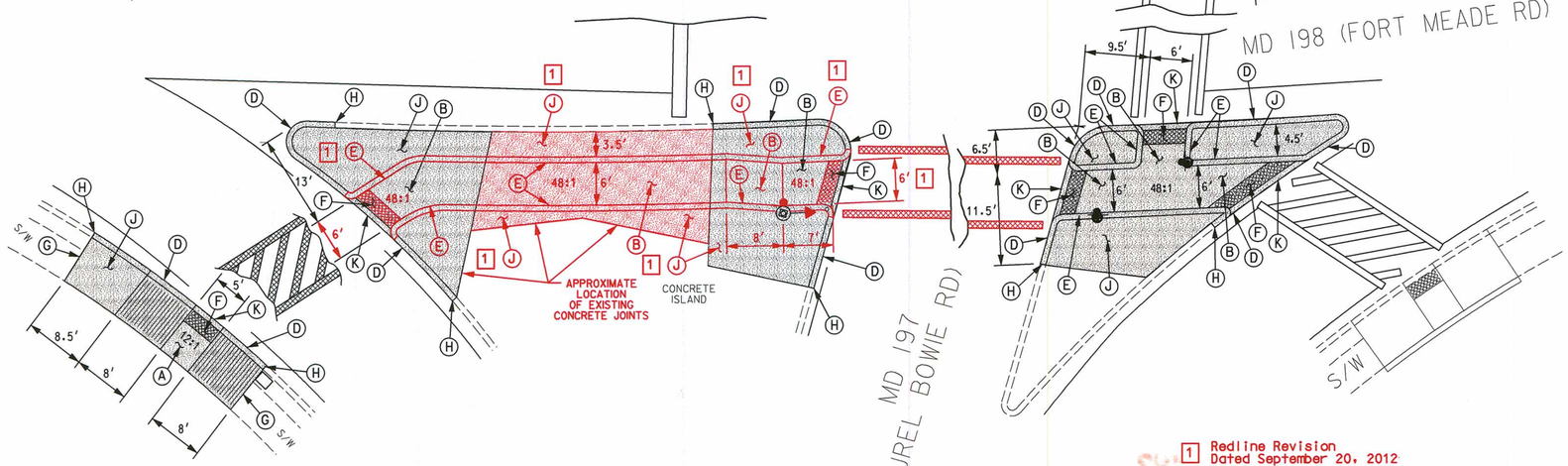

APS NOTES:

1. Pushbuttons are to be located so that they can be activated by a person in a wheelchair reaching less than 18"from a 60"x 60" level landing area with a cross slope of less than or equal to 2%.
2. The 10' separation between pushbuttons is to be measured from face of pushbutton, not center to center of pole.
3. Pushbutton arrows are to be parallel to the crossing for which they are intended.
4. Location of accessible pedestrian signal pushbuttons must meet location requirements of MUTCD Sec.4E.09 and Fig.4E.2 and the NCHRP publication, "Accessible Pedestrian Signals: Guide To Best Practice". If not met, the contractor is to stop work on push-button locations until a design waiver is obtained, approved by the director, Office Of Traffic and Safety.
5. APS will function as follows:

TO CROSS MD 198 (FORT MEADE ROAD) East leg

a. When pedestrian locates and presses the pushbutton for an extended time, the pushbutton unit will announce the following message " Wait to cross Fort Meade at Laurel-Bowie: Wait."

b. When the WALK phase begins, the pushbutton unit will provide a rapid tick which will last for the duration of the WALK phase.

TO CROSS IRVING STREET

a. When pedestrian locates and presses the pushbutton for an extended time, the pushbutton unit will announce the following message " Wait to cross Irving at Fort Meade: Wait." Crosswalk angles left.

b. When the WALK phase begins, the pushbutton unit will provide a rapid tick which will last for the duration of the WALK phase.

TO CROSS LAUREL-BOWIE ROAD

a. When pedestrian locates and presses the pushbutton for an extended time, the pushbutton unit will announce the following message " Wait to cross Laurel-Bowie at Fort Meade: Wait."

b. When the WALK phase begins, the pushbutton unit will provide a rapid tick which will last for the duration of the WALK phase.

CONSTRUCTION DETAILS

A. Install parallel sidewalk ramp (Std No. MD 655.12).

B. Install median cut through (Std No. MD 655.21).

1 ~~C. Install perpendicular sidewalk ramp (Std No. MD 655.11).~~

D. Install standard Type "A" combination curb and gutter (Standard No. MD 620.02)

E. Install 8" curb as shown.

F. Install detectable warning surface (Std NO. MD 655.40).

G. Tie in sidewalk with existing sidewalk at joint.

H. Tie new curb to existing curb at joint.

J. Install sidewalk section as shown.

K. Install standard Type "A" combination curb and gutter (Standard No. MD 620.02)(depressed)

L. Existing Median Nose to be removed. (See Signal Plan Sheet 1 of 4).

M. Install Type "A" combination curb and gutter (4" curb height).

GEOMETRIC LEGEND

PROPOSED SIDEWALK / CURB

EXISTING SIDEWALK / CURB

PROPOSED SIDEWALK / ADA RAMP / CURB

NOTE:
SIDEWALK JOINTS ARE APPROXIMATE

1 Redline Revision
Dated September 20, 2012

SHA MDOT - SHA O.O.T.S.
S.H.A. Approval 9/24/12 Date
T.S. # 1847H T.I.M.S. # L218

STATE OF MARYLAND
DEPARTMENT OF TRANSPORTATION
STATE HIGHWAY ADMINISTRATION

MD 198 (FORT MEADE RD) AND
MD 197 (LAUREL-BOWIE RD)/IRVING ST

LAUREL, MARYLAND

ADA RAMP DETAIL PLAN

SCALE 1"= 10' DATE 5-29-12 CONTRACT NO. XY2245185

DESIGNED BY R R ZACHERL
DRAWN BY W J NIES
CHECKED BY
F.A.P. NO.

COUNTY PRINCE GEORGE'S
LOGMILE 16019714.64
TIMS NO. L218
TOD NO.

TS NO. 1847K | DRAWING NO. 2 OF 4 | SHEET NO. OF

STREET...TRAFFIC STUDIES, LTD.
Ph (410) 590-5500
Fax (410) 590-6637
6056ADAred.dgn