WIRING DIAGRAMS

MD 198 @ MD 197

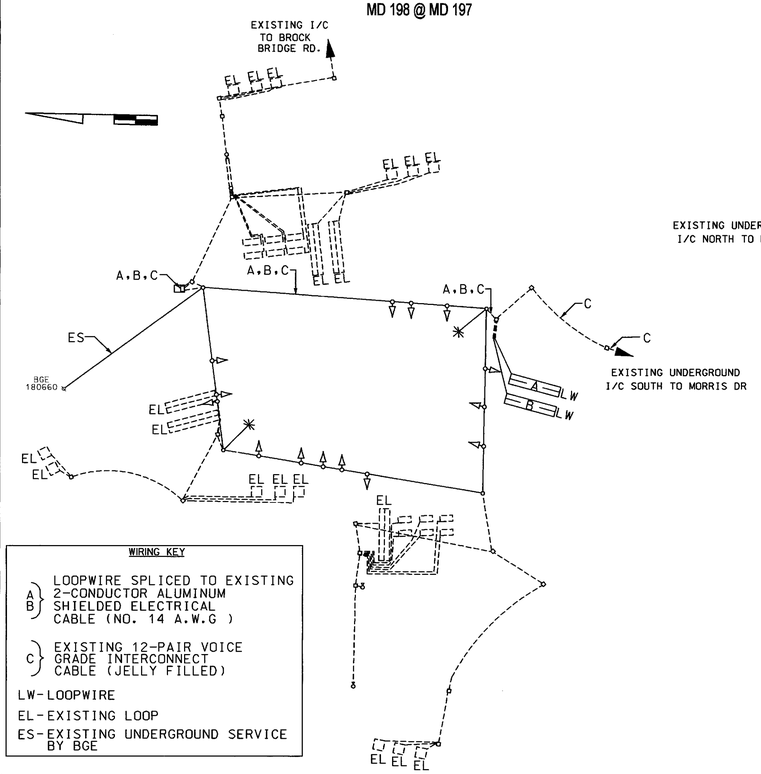

WIRING KEY

A, B — LOOPWIRE SPLICED TO EXISTING 2-CONDUCTOR ALUMINUM SHIELDED ELECTRICAL CABLE (NO. 14 A.W.G)

C — EXISTING 12-PAIR VOICE GRADE INTERCONNECT CABLE (JELLY FILLED)

LW-LOOPWIRE

EL-EXISTING LOOP

ES-EXISTING UNDERGROUND SERVICE BY BGE

MD 197 @ MORRIS DR/HECHINGER'S DR

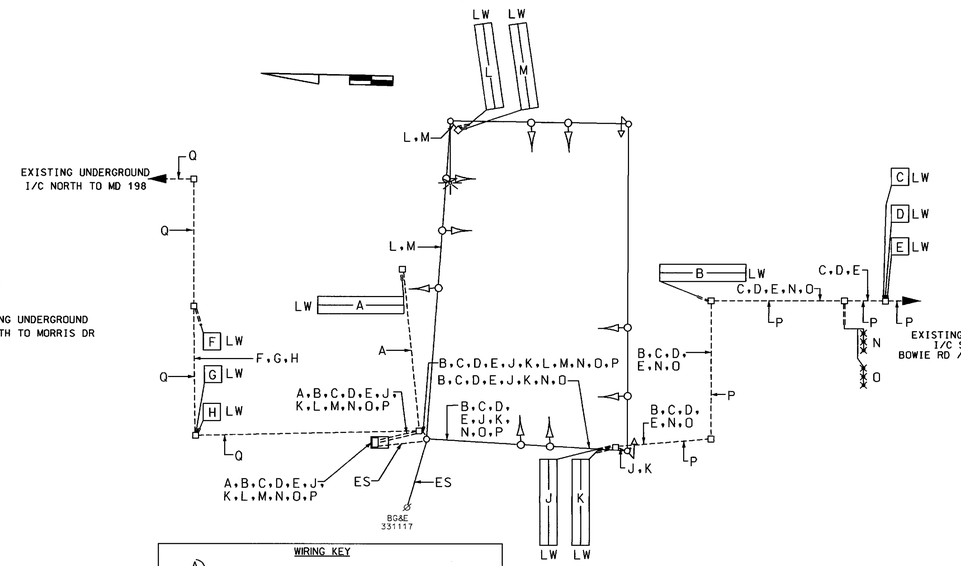

WIRING KEY

A, B, C, D, E, F, G, H, J, K, L, M — LOOPWIRE SPLICED TO EXISTING 2-CONDUCTOR ALUMINUM SHIELDED ELECTRICAL CABLE (NO. 14 A.W.G)

N, O — MICROLOOP LEAD-IN CABLE (1000')

P, Q — EXISTING 12-PAIR VOICE GRADE INTERCONNECT CABLE (JELLY FILLED)

LW-LOOPWIRE

ES-EXISTING UNDERGROUND SERVICE BY BGE

MD 197 @ CLUBHOUSE DR

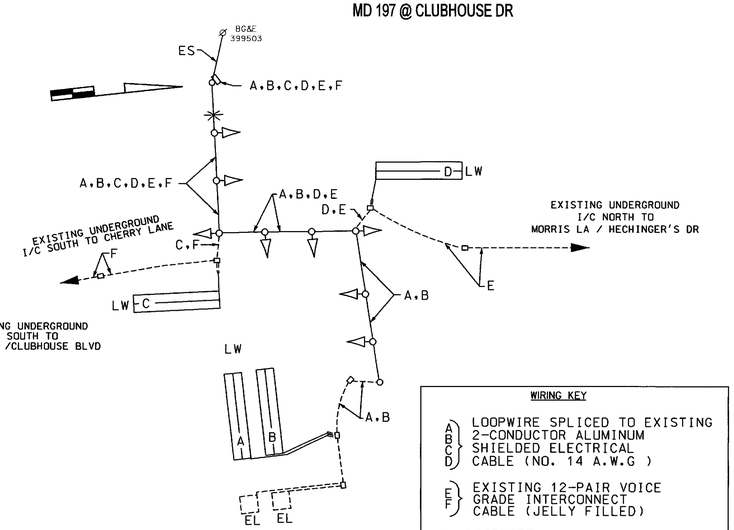

WIRING KEY

A, B, C, D — LOOPWIRE SPLICED TO EXISTING 2-CONDUCTOR ALUMINUM SHIELDED ELECTRICAL CABLE (NO. 14 A.W.G)

E, F — EXISTING 12-PAIR VOICE GRADE INTERCONNECT CABLE (JELLY FILLED)

LW-LOOPWIRE

EL-EXISTING LOOP

ES-EXISTING OVERHEAD SERVICE BY BGE

MD 197 @ CHERRY LANE

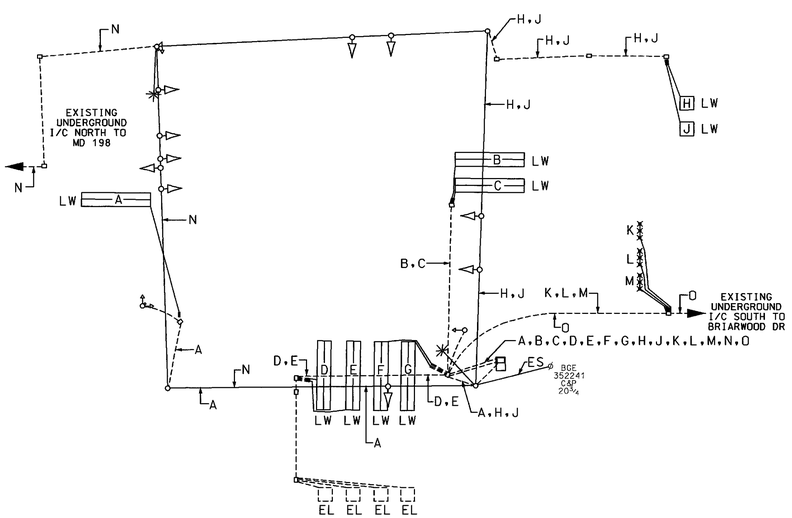

WIRING KEY

A, B, C, D, E, F, G, H, J — LOOPWIRE SPLICED TO EXISTING 2-CONDUCTOR ALUMINUM SHIELDED ELECTRICAL CABLE (NO. 14 A.W.G)

K, L, M — MICROLOOP LEAD-IN CABLE (500')

N, O — EXISTING 12-PAIR VOICE GRADE INTERCONNECT CABLE (JELLY FILLED)

LW-LOOPWIRE

EL-EXISTING LOOP

ES-EXISTING UNDERGROUND SERVICE BY BGE

MD 197 @ BRIARWOOD DR

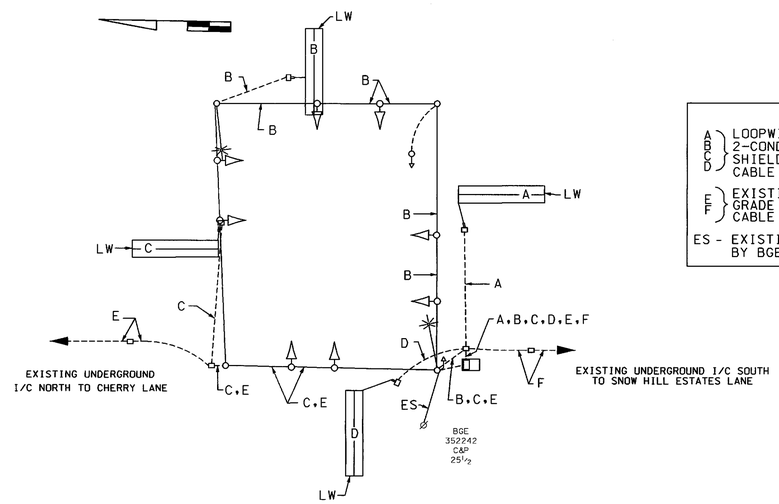

WIRING KEY

A, B, C, D — LOOPWIRE SPLICED TO EXISTING 2-CONDUCTOR ALUMINUM SHIELDED ELECTRICAL CABLE (NO. 14 A.W.G)

E, F — EXISTING 12-PAIR VOICE GRADE INTERCONNECT CABLE (JELLY FILLED)

ES - EXISTING OVERHEAD SERVICE BY BGE

STREET TRAFFIC STUDIES, LTD.
400 Crain Hwy. NW.
Glen Burnie, MD 21061
Ph (410) 590-5500
Fax (410) 590-6637

4454gl.dgn Task 92

MARYLAND DOT - STATE HIGHWAY ADMINISTRATION
Office of Traffic & Safety
TRAFFIC ENGINEERING DESIGN DIVISION

MD 197 FROM MD 198 TO MUIRKIRK ROAD

DRAWN BY: James Allen Jr.	F.A.P. NO.		TS NO.		
CHECKED BY:	S.H.A. NO.	PG480A21			SHEET NO.
SCALE: NONE	COUNTY:	PRINCE GEORGE'S	T.I.M.S. NO. F872		10 OF 12
DATE: 11/03/03	LOG MILE:				