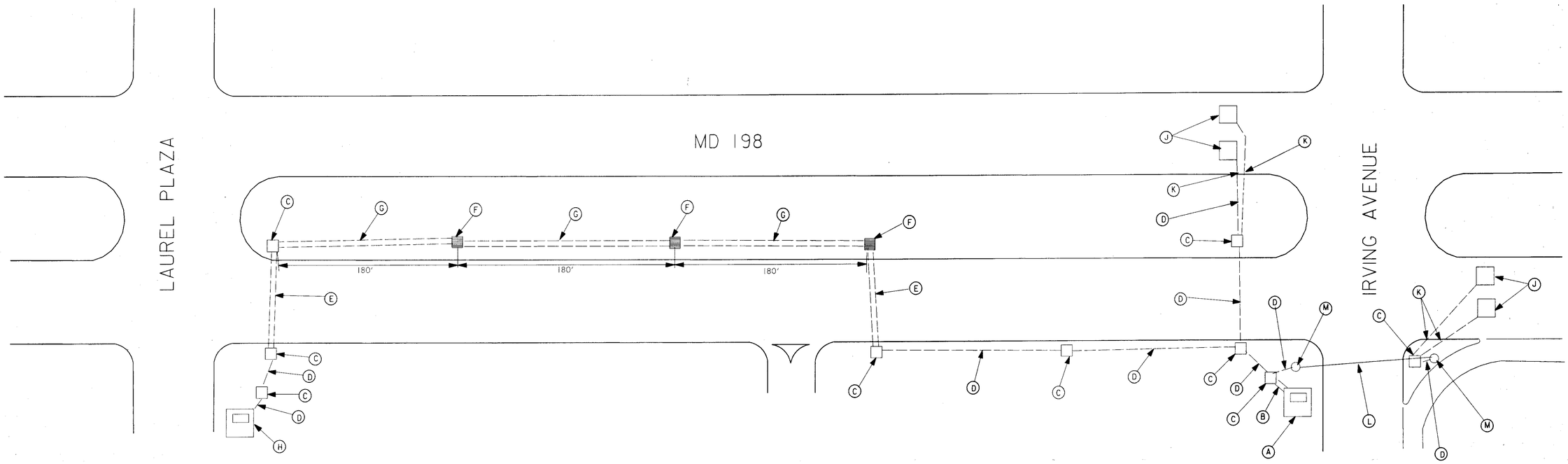

(A) INSTALL 4" SCHEDULE 80 RIGID PVC CONDUIT BEND INTO EXISTING FOUNDATION AND USE EXISTING CABINET.
(B) INSTALL 4" SCHEDULE 80 RIGID PVC CONDUIT - TRENCHED INTO EXISTING HANDHOLE.
(C) USE EXISTING HANDHOLE.
(D) USE EXISTING CONDUIT.
(E) INSTALL 3" SCHEDULE 80 RIGID PVC CONDUIT - SLOTTED.
(F) INSTALL ELECTRICAL HANDHOLE.
(G) INSTALL 2" SCHEDULE 80 RIGID PVC CONDUIT - TRENCHED.
(H) USE EXISTING CABINET.
(J) INSTALL 6' x 6' LOOP DETECTOR.
(K) INSTALL 1" ELECTRICAL CONDUIT - GALVANIZED SLEEVE.
(L) USE EXISTING SPAN WIRE.
(M) USE EXISTING SIGNAL POLES.

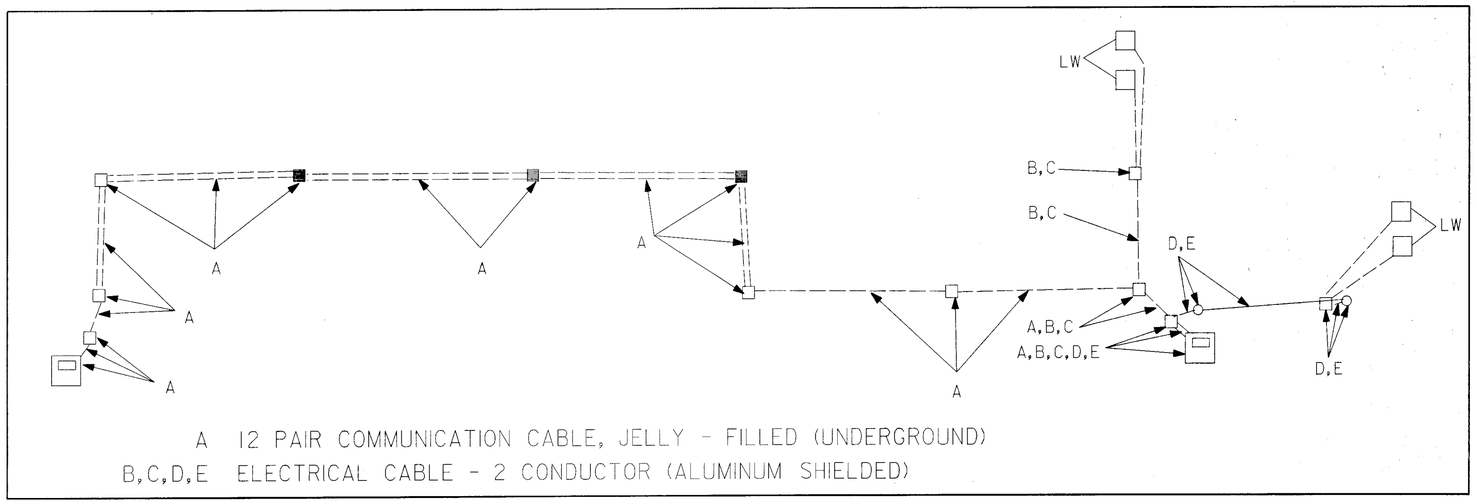

EQUIPMENT LIST

A. EQUIPMENT TO BE FURNISHED AND INSTALLED BY THE CONTRACTOR.

ITEM NO.	QUANTITY	DESCRIPTION
1001	1 EA	MAINTENANCE OF TRAFFIC PER ASSIGNMENT
8011	200 LF.	FURNISH AND INSTALL SAWCUT FOR LOOP DETECTOR
8012	75 LF.	FURNISH AND INSTALL 1" ELECTRICAL CONDUIT - GALVANIZED SLEEVE
8016	650 LF.	FURNISH AND INSTALL 3 INCH SCHEDULE 80 RIGID PVC CONDUIT - TRENCHED
8018	140 LF.	FURNISH AND INSTALL 3 INCH SCHEDULE 80 RIGID PVC CONDUIT - SLOTTED
8019	10 LF.	FURNISH AND INSTALL 4 INCH SCHEDULE 80 RIGID PVC CONDUIT - TRENCHED
8021	3 EA.	FURNISH AND INSTALL ELECTRICAL HANDHOLE
8023	1150 LF.	FURNISH AND INSTALL 12 PAIR COMMUNICATION CABLE, JELLYFILLED (UNDERGROUND)
8024	800 LF.	FURNISH AND INSTALL LOOP WIRE ENCASED IN FLEXIBLE TUBING
8025	600 LF.	FURNISH AND INSTALL ELECTRICAL CABLE - 2 CONDUCTOR (ALUMINUM SHEILDED)
8038	1 EA.	INSTALL CONDUIT BEND IN EXISTING BASE

REVISIONS	APPROVALS
	for Dimitrios A. Zafiris ASST. TRAFFIC ENGINEERING DESIGN DIVISION
	ASST. DISTRICT ENGINEER, TRAFFIC
	CHIEF, TRAFFIC ENGINEERING DESIGN DIVISION
	DIRECTOR, TRAFFIC & SAFETY

MARYLAND DOT - STATE HIGHWAY ADMINISTRATION
Office of Traffic & Safety
TRAFFIC ENGINEERING DESIGN DIVISION
MD 197 FROM IRVING AVE. TO LAUREL PLAZA
INTERCONNECT PLAN

DRAWN BY:		F.A.P. NO.		TS NO. 3868	SHEET NO.
CHECKED BY:		S.H.A. NO.	AW526A52/B52		
SCALE:	NO SCALE	COUNTY:	PRINCE GEORGE'S	T.I.M.S. NO. C 807	1 OF 1
DATE:	MAY 1998	LOG MILE:			

ustnkim\kim\pg\md198.dgn Nov. 04, 1998 08:58:40