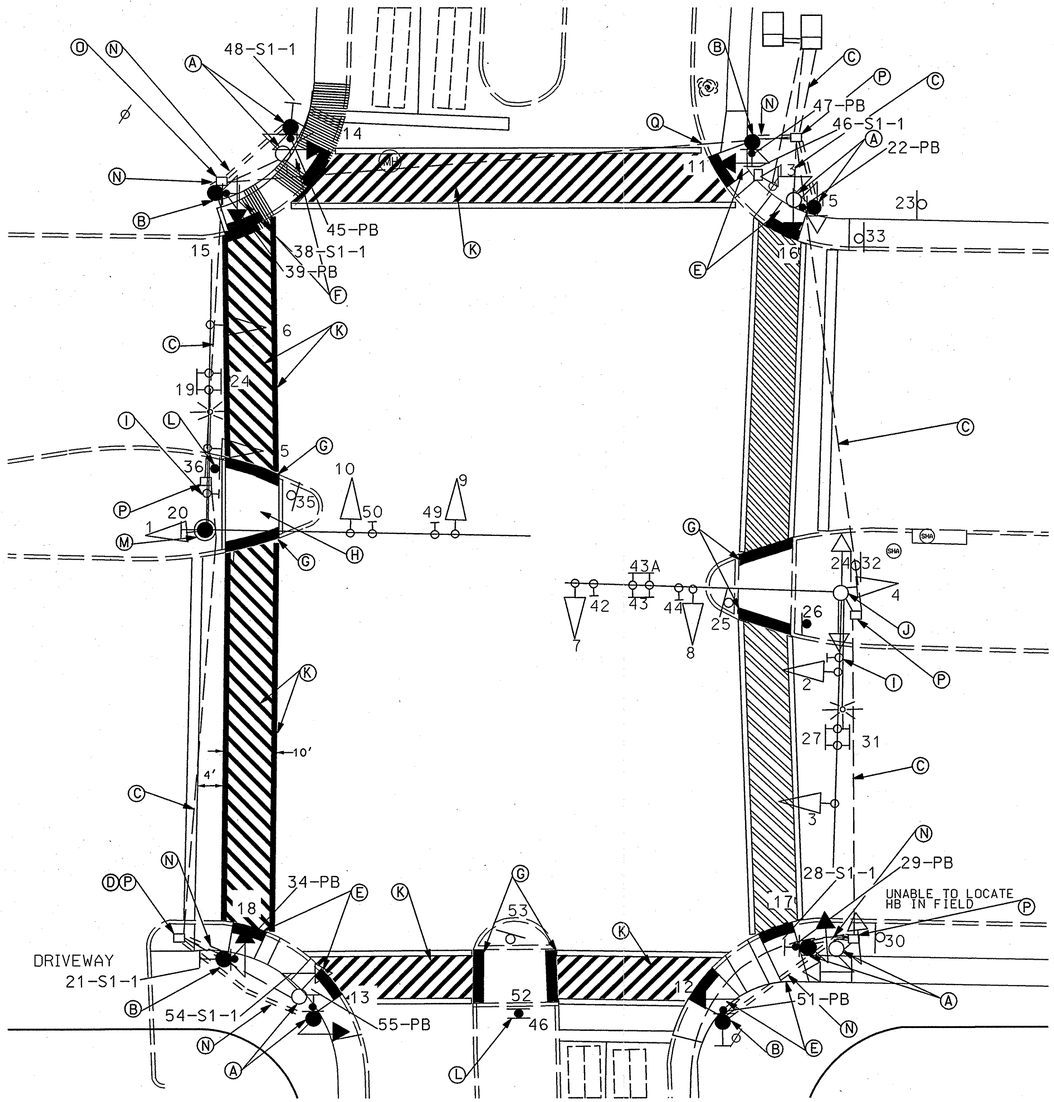

CONSTRUCTION DETAILS

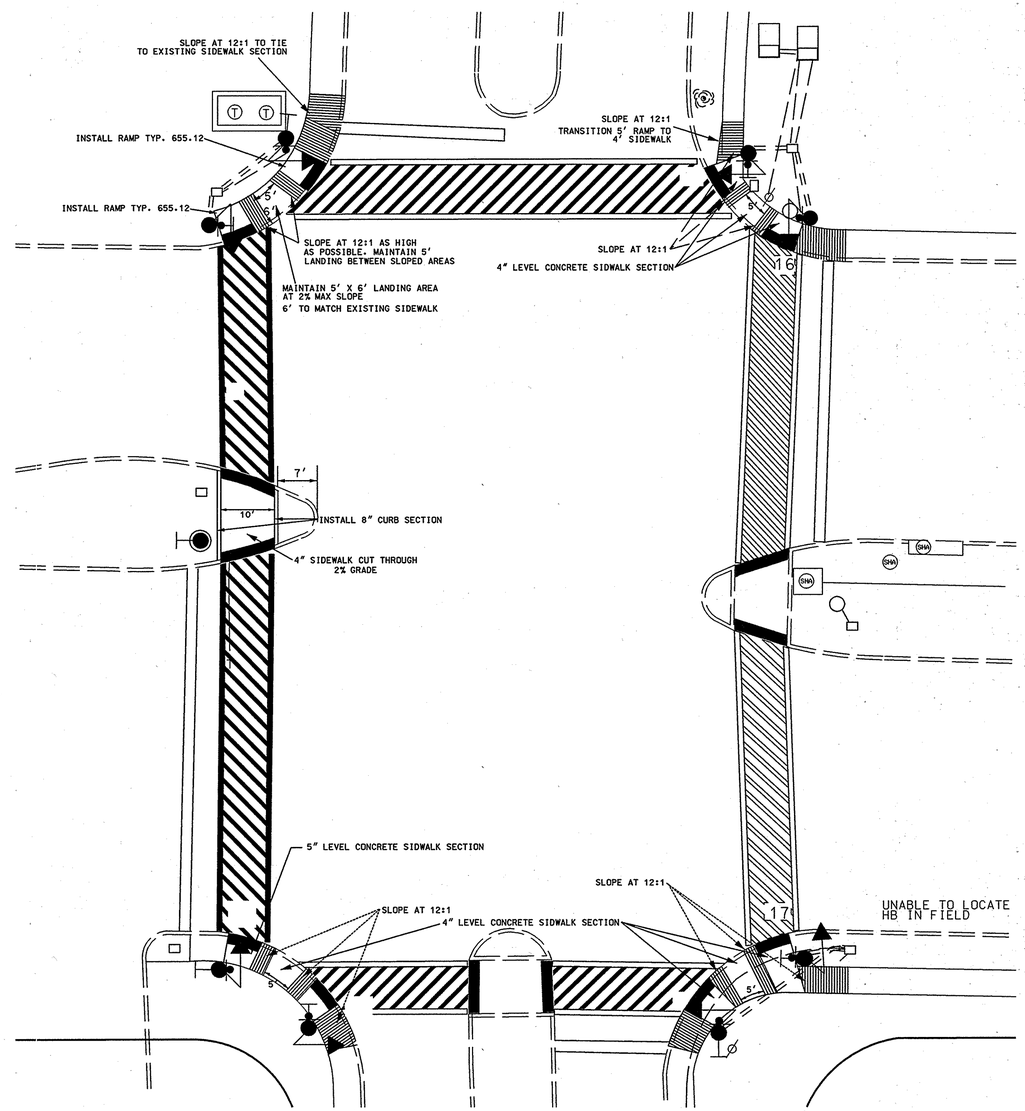

A. RELOCATE EXISTING BREAKAWAY PEDESTAL POLE TO NEW FOUNDATION AS SHOWN ON PLANS. INSTALL APS PUSHBUTTON, 16" LED COUNTDOWN PEDESTRIAN SIGNAL HEAD, R10-3(1) PUSHBUTTON SIGN, 36" S1-1 SIGN WITH 15"X21" W16-7 ARROW PLATE, 1 3" CONDUIT BEND IN BASE.
B. INSTALL 10' BREAKAWAY PEDESTAL POLE WITH APS PUSHBUTTON, 16" LED COUNTDOWN PEDESTRIAN SIGNAL HEAD, R10-3(1) PUSHBUTTON SIGN, 36" S1-1 SCHOOL SIGN, 15"X21" W6-7 ARROW PLATE, 1 3" CONDUIT BEND IN BASE.
C. USE EXISTING CONDUIT
D. ADJUST EXISTING HANDHOLE TO GRADE
E. INSTALL MODIFIED 655.12 RAMP WITH DETECTABLE WARNING SURFACE. SEE DETAIL SHEET 2
F. INSTALL MODIFIED 655.11 RAMP WITH DETECTABLE WARNING SURFACE. SEE DETAIL SHEET 2
G. INSTALL DETECTABLE WARNING SURFACE TO EXISTING MEDIAN CUT THROUGH IN ACCORDANCE WITH SHA STANDARD 655.21
H. REMOVE EXISTING MEDIAN, INSTALL MEDIAN CUT THROUGH WITH DETECTABLE WARNING SURFACE AS SHOWN IN DETAIL ON SHEET 2
I. REMOVE EXISTING R10-12 MAST ARM MOUNTED SIGN
J. REMOVE EXISTING PEDESTRIAN SIGNAL HEADS AND PUSHBUTTON FROM EXISTING SIGNAL POLE
K. INSTALL 12" WHITE PREFORMED THERMOPLASTIC PAVEMENT MARKINGS (CROSSWALK)
L. INSTALL GROUND MOUNTED SIGN ON 4"X6" WOOD SIGN SUPPORT
M. INSTALL SCHOOL CROSSING SIGN AND ARROW PLATE ON EXISTING SIGNAL UPRIGHT
N. INSTALL 3" RIGID PVC CONDUIT-TRENCHED
O. ADJUST EXISTING HANDBOX TO GRADE
P. USE EXISTING HANDBOX

TOD NO: AT925-14
SHA No: PG587A53/B53
MD 5 @ Curtis Drive; MD 5 @ MD 637

STATE OF MARYLAND
DEPARTMENT OF TRANSPORTATION
STATE HIGHWAY ADMINISTRATION
OFFICE OF TRAFFIC & SAFETY
TRAFFIC ENGINEERING DESIGN DIVISION

MD 5 @ CURTIS DRIVE

DETAIL SHEET

SCALE 1:20	DATE 11/20/1973	CONTRACT NO.	
DESIGNED BY C STRAIN		COUNTY PRINCE GEORGE'S	
DRAWN BY C STRAIN		LOGMILE 16000514.67	
CHECKED BY J BIDDLE		TIMS NO. H344	
FAP NO.		TOD NO.	
TS NO. 1071E-DS	DRAWING – OF	SHEET NO. 2 OF 3	

PLOTTED: Tuesday, April 17, 2007 at 3:52:03 PM
FILE: MD 5 @ MD 637.dgn

BY: cstrain