DRILL HOLES

DRILL HOLES

DRILL HOLES

MD 710 IS CONSIDERED TO RUN IN A EAST-WEST DIRECTION.

PROJECT DESCRIPTION

I. GENERAL

THIS PROJECT INVOLVES THE INSTALLATION OF A RIGHT TURN OVERLAP PHASE FOR NORTHBOUND CHESAPEAKE CENTRE DRIVE AND SOUTHBOUND ARUNDEL CORPORATION ROAD AT THE INTERSECTION OF MD 710 (ORDNANCE ROAD) IN ANNE ARUNDEL COUNTY. MD 710 IS ASSUMED TO RUN IN AN EAST-WEST DIRECTION.

II. INTERSECTION OPERATION

THE INTERSECTION SHALL CONTINUE TO OPERATE IN NEMA SIX PHASE FULLY ACTUATED MODE WITH THE MD 710 (ORDNANCE ROAD) APPROACHES RUNNING CONCURRENLTY. THE EXCLUSIVE LEFT TURN PHASES FOR BOTH APPROACHES OF MD 710 SHALL CONTINUE TO BE PROVIDED. RIGHT TURN OVERLAP PHASES SHALL NOW BE PROVIDED FOR BOTH THE ARUNDEL CORPORATION ROAD AND CHESAPEAKE CENTRE DRIVE APPROACHES.

III. CONTROLLER REQUIREMENTS

THE EXISTING POLE MOUNTED CABINET AND CONTROLLER WILL BE USED

EQUIPMENT LISTS

A. EQUIPMENT TO BE FURNISHED BY THE SHA

NONE

B. EQUIPMENT TO BE FURNISHED AND INSTALLED BY THE CONTRACTOR

ITEM NO.	QUANTITY	DESCRIPTION
1001	1 EACH	MAINTENANCE OF TRAFFIC
8003	10 EACH	12 INCH (R,Y,YA,G,GA) LED SIGNAL HEAD SECTION
8050	2 EACH	VIDEO DETECTION CAMERA & CONTROLLER CABLES UP TO 500 L.F.
8061	225 L.F.	ELECTRICAL CABLE - 7 CONDUCTOR (NO. 14 AWG)

C. ITEMS TO BE RETURNED TO THE SHA

QUANTITY	DESCRIPTION
2 EACH	VIDEO DETECTION CAMERA

PHASING DIAGRAM

	1	2	3	4	5	6	7	8	9	10	11	12	13	14	15	16
PHASE 1 AND 5	←G–	←G–	R	R	←G–	←G–	R	R	R	R	R-G→	R	R	R-G→	DW	DW
1 AND 5 CHANGE	←Y–	←Y–	R	R	←Y–	←Y–	R	R	R	R	R-Y→	R	R	R-Y→	DW	DW
PHASE 2 AND 6	←R–	←R–	G	G	←R–	←R–	G	G	R	R	R	R	R	R	DW	DW
2 AND 6 CHANGE	←R–	←R–	Y	Y	←R–	←R–	Y	Y	R	R	R	R	R	R	DW	DW
PHASE 3	←R–	←R–	R	R	←R–	←R–	R	R	R	R	R	G ←G–	G ←G–	G	DW	DW
PHASE 3 CHANGE	←R–	←R–	R	R	←R–	←R–	R	R	R	R	R	Y	Y	Y	DW	DW
PHASE 4	←R–	←R–	R	R	←R–	←R–	R	R	G ←G–	G ←G–	G	R	R	R	DW	DW
PHASE 4 CHANGE	←R–	←R–	R	R	←R–	←R–	R	R	Y	Y	Y	R	R	R	DW	DW
PHASE 4 ALT	←R–	←R–	R	R	←R–	←R–	R	R	G ←G–	G ←G–	G	R	R	R	WK	WK
PED CLEARANCE	←R–	←R–	R	R	←R–	←R–	R	R	G ←G–	G ←G–	G	R	R	R	FL/DW	FL/DW
PHASE 4 ALT CHANGE	←R–	←R–	R	R	←R–	←R–	R	R	Y	Y	Y	R	R	R	DW	DW
FLASHING OPERATION	FL/RA	FL/RA	FL/Y	FL/Y	FL/RA	FL/RA	FL/Y	FL/Y	FL/R	FL/R	FL/R	FL/R	FL/R	FL/R	DARK	DARK

WIRING DIAGRAM

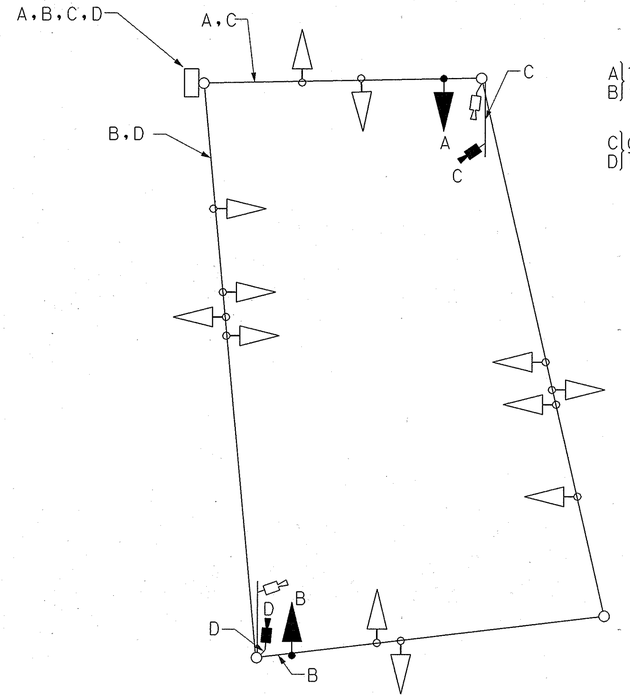

KEY

A) 7 CONDUCTOR ELECTRICAL CABLE
B) (NO. 14 AWG)

C) CONTROL CABLE, VIDEO DETECTION CAMERA
D) TO CONTROLLER

STATE OF MARYLAND
DEPARTMENT OF TRANSPORTATION
STATE HIGHWAY ADMINISTRATION

MD 710 (ORDNANCE ROAD) AND CHESAPEAKE CENTRE DRIVE/ ARUNDEL CORPORATION ROAD GLEN BURNIE, MARYLAND

SCALE None DATE 02/2007 CONTRACT NO. OT-2007

DESIGNED BY: WS
DRAWN BY: WS
CHECKED BY: WMalek
F.A.P. NO.:

COUNTY: ANNE ARUNDEL
LOGMILE: 02071000.25
TIMS: 1184

DRAWING NO. 3170 F - OF

SHEET NO. 2 OF 2