DRILL HOLES

BORDER REV: DATE: June 1, 2004

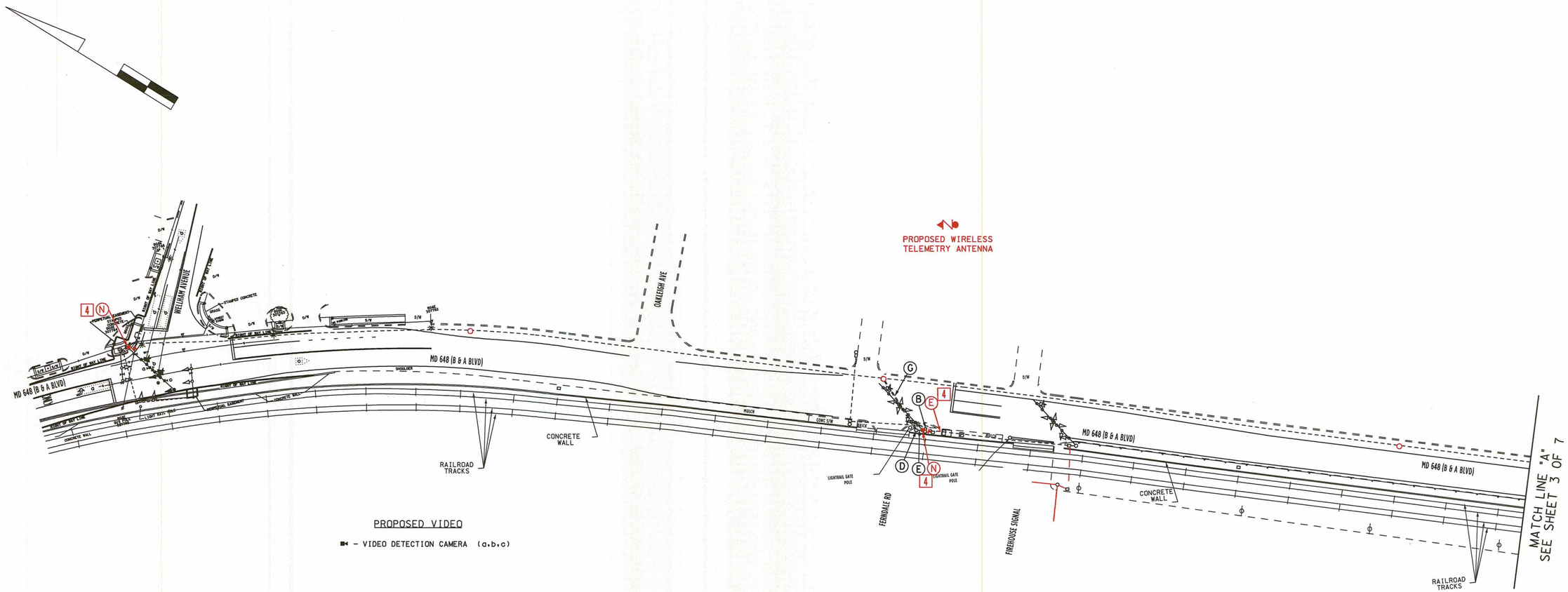

PROPOSED VIDEO

■◄ – VIDEO DETECTION CAMERA (a,b,c)

CONSTRUCTION DETAILS

A. Install proposed signal equipment as detailed on the signal plan (TS NO. 1356D) sheet 1 of 7.

B. Use existing pole mounted cabinet.

D. Use existing handhole.

E. Use existing conduit.

F. Install manhole (See Roadway Patch Detail on this sheet.)

G. Install 3" polyvinyl chloride electrical conduit (Schedule 80) (bored).

4 N. INSTALL WIRELESS TELEMETRY ANTENNA ON SIGNAL POLE UPRIGHT AND ROUTE CABLE TO EXISTING CABINET

ROADWAY PATCH DETAIL WITH MANHOLE STANDARD NO. MD 811.04

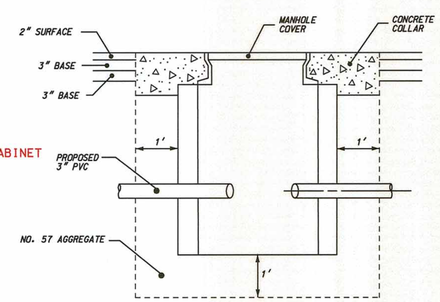

CONSTRUCTION NOTE:

1. No. 57 Aggregate shall be used with installation of all manholes (with 2-HMA lifts of 3" and a 2" surface).

GENERAL NOTES:

1. All underground utilities shown on these plans are schematic only and may not be complete. The contractor shall be responsible for notifying "MISS UTILITY" prior to construction so that all utilities may be located in the field. If the contractor perceives that a conflict between the utilities and the traffic signal will occur, the contractor shall notify the project engineer immediately so that the conflict may be resolved.

GEOMETRIC LEGEND

PROPOSED ———

EXISTING — — — — —

LEGEND OF UNDERGROUND AND OVERHEAD UTILITIES

AERIAL CABLE	—A—	—A—
ELECTRIC	—E—	—E—
TELEPHONE	—T—	—T—
GAS	—G—	—G—
SEWER	—S—	—S—
WATER	—W—	—W—
CABLE TV	—TV—	—TV—

REDLINE #4 7/26/2013 APPROVED 7-29-13

DENNIS DODA, TEAM LEADER, TEDD

STREET TRAFFIC STUDIES, LTD.
400 Crain Hwy. N.W.
Glen Burnie, MD 21061
Ph (410) 590-5500
Fax (410) 590-5637

5965ic.dgn T-139

APPROVALS	REVISIONS
TEAM LEADER	
ASST. DIV. CHIEF	
DIVISION CHIEF	
OFFICE DIRECTOR	

PLOTTED: @DATETIME@
FILE: @FILE@

SHA

STATE OF MARYLAND
DEPARTMENT OF TRANSPORTATION
STATE HIGHWAY ADMINISTRATION

MD 648 (B & A BLVD): FROM WELLHAM AVE TO MD 176 (DORSEY RD)

FERNDALE, MD

INTERCONNECT PLAN XX6475185

SCALE 1"= 50' DATE 11-16-11 CONTRACT NO. ~~XX6315185~~

DESIGNED BY RRZ COUNTY ANNE ARUNDEL

DRAWN BY D.A.NIES LOGMILE

CHECKED BY TIMS NO. G799

F.A.P. NO. TOD NO.

TS NO. 12555 DRAWING NO. 2 OF 7 SHEET NO. OF