MD 170 IS ASSUMED TO RUN IN A NORTH-SOUTH DIRECTION

DETAIL SCALE 1"=10'

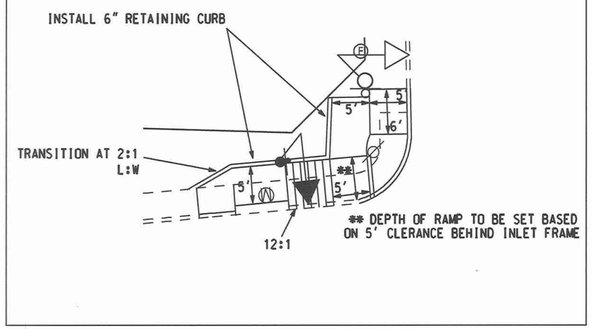

DRAWING SCALE 1"=20'

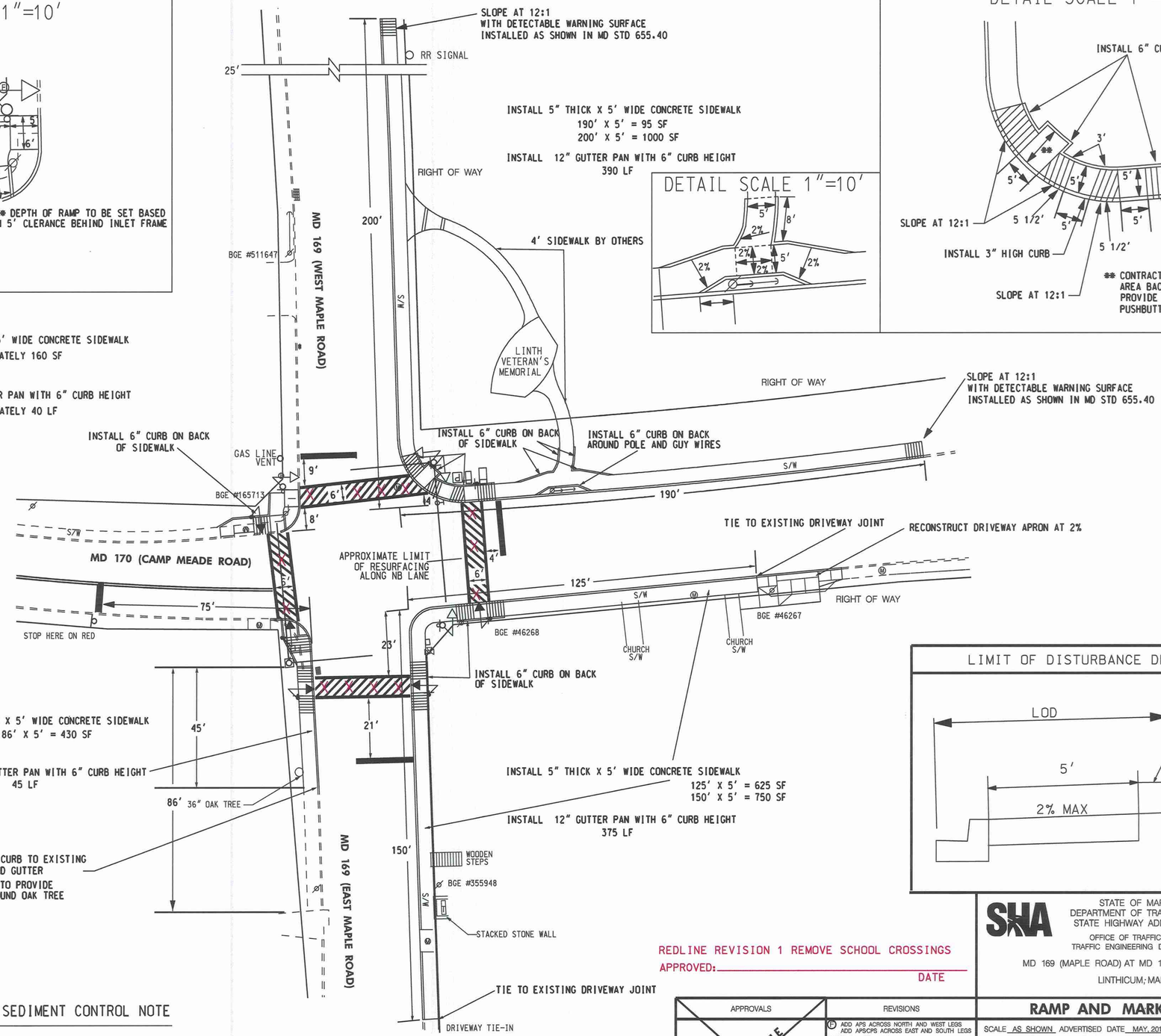

DETAIL SCALE 1"=10'

DETAIL SCALE 1"=10'

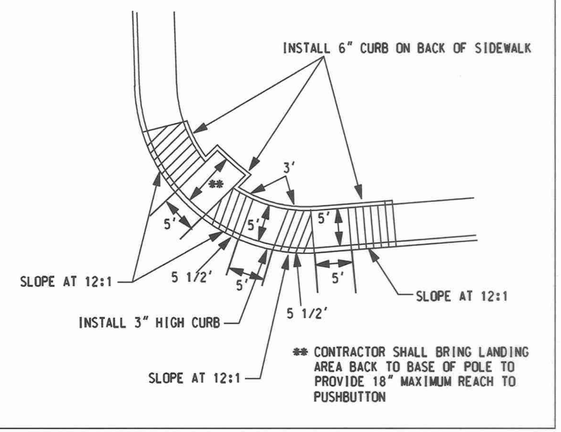

DETAIL SCALE 1"=10'

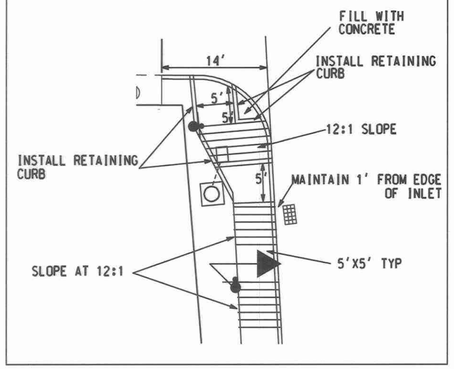

LIMIT OF DISTURBANCE DETAIL : NTS

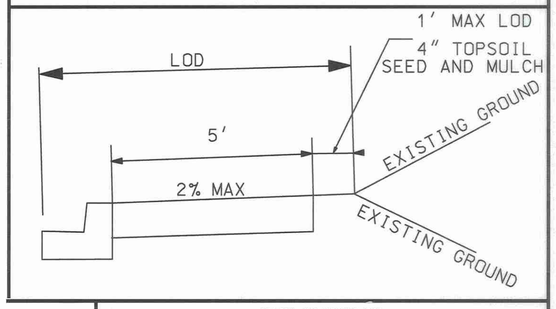

GEOMETRIC LEGEND

EXISTING

UTILITY LEGEND

SD	STORM DRAIN
G	GAS MAIN
W	WATER MAIN
S	SEWER MAIN
E	ELECTRIC CABLES
A	AERIAL CABLES
T	TELEPHONE CABLES
F	FIBER-OPTIC

EROSION AND SEDIMENT CONTROL NOTE

NO DISTURBED AREA SHALL BE LEFT UNSTABILIZED OVERNIGHT UNLESS THE RUNOFF IS DIRECTED TO AN APPROVED SEDIMENT CONTROL DEVICE.

REDLINE REVISION 1 REMOVE SCHOOL CROSSINGS

APPROVED: _____ DATE

APPROVALS: TEAM LEADER; ASST. DIV. CHIEF; DIVISION CHIEF; OFFICE DIRECTOR — ORIGINAL ON FILE

REVISIONS

F	ADD APS ACROSS NORTH AND WEST LEGS ADD APS/CPS ACROSS EAST AND SOUTH LEGS MAY, 2010 AX7055168
CJS	
E	AS BUILT FOR UPS INSTALLATION 05/2009
SWA	
D	ADD OPTICOM DETECTOR FOR NORTHBOUND MD 170 SHA NO. AT7825185 10/2005
STV	SDY

PLOTTED: $DATETIME$
FILE: $FILE$

STATE OF MARYLAND
DEPARTMENT OF TRANSPORTATION
STATE HIGHWAY ADMINISTRATION
OFFICE OF TRAFFIC & SAFETY
TRAFFIC ENGINEERING DESIGN DIVISION

MD 169 (MAPLE ROAD) AT MD 170 (CAMP MEADE ROAD)
LINTHICUM, MARYLAND

RAMP AND MARKING DETAILS

SCALE AS SHOWN ADVERTISED DATE MAY, 2010 CONTRACT NO. AX7055168

DESIGNED BY C STRAIN — COUNTY ANNE ARUNDEL
DRAWN BY C STRAIN — LOGMILE 02017009.85
CHECKED BY D DODA — TIMS NO. J323
F.A.P. NO. — TOD NO.

TS NO. 1608 F | DRAWING -·-·- OF · | SHEET NO. 2 OF 3

BY: $USERNAME$