PROJECT DESCRIPTION

I. GENERAL

This project involves the installation of a new Hazard Identification Beacon for the middle of the block crosswalk in advance of the intersection of MD 70 (Bladen St.) and Calvert St. in Annapolis, Anne Arundel County. MD 70 is assumed to run in an east-west direction.

II. INTERSECTION OPERATION

The Hazard Identification Beacon shall be interconnected with the intersection and wired to the flash opertion inside the cabinet.

III. SPECIAL NOTES

All field wiring to the exisiting controller cabinets shall be terminated to the appropriate controller cabinet connectors by the Contractor and labeled. All other controller cabinet wiring will be performed by the S.H.A. Signal Shop. Contact Mr. Ed Rodenhizer at (410) 787-7650 seventy-two hours in advance of intended work.

WIRING DIAGRAM

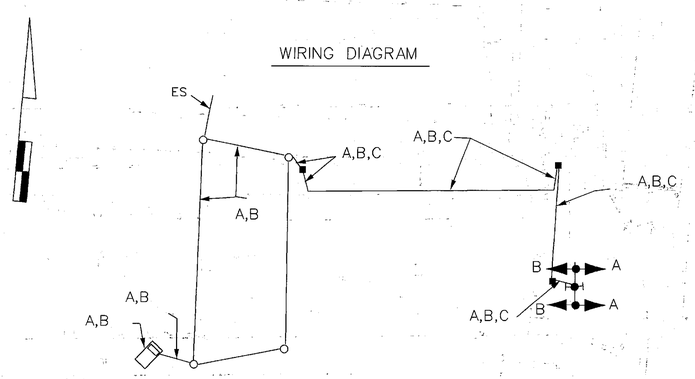

WIRING KEY:

A - 5 - CONDUCTOR (NO. 14 AWG)
B - ELECTRICAL CABLE

C - NO.6 AWG STRANDED BARE COPPER GROUND WIRE.

ES- EXISTING SERVICE TO BE MAINTAINED

NOTE: ALL EXISTING ELECTRICAL CABLE NOT SHOWN ARE TO BE MAINTAINED

EQUIPMENT LISTS

A. EQUIPMENT TO BE FURNISHED BY THE ADMINISTRATION AND INSTALLED BY THE CONTRACTOR.

ITEM NO.	QUANTITY	DESCRIPTION
9089	18 S.F.	Flat Sheet Alum. Sign. W11 - 2A (FYG) 36" x 36"

B. EQUIPMENT TO BE FURNISHED AND INSTALLED BY THE CONTRACTOR.

ITEM NO.	QUANTITY	DESCRIPTION
1001	1 EA.	Maintenance of Traffic.
2001	1 C.Y.	Test Pit Excavation.
8001	2 EA.	Adjust and re-ring existing span.
8003	1 EA.	Clean, cut galvanize and cap traffic signal structure.
8006	4 EA.	Furnish and install 12" vehicular traffic signal head section.
8007	2 EA.	Furnish and install 3" weatherhead.
8012	1 EA.	Furnish and install breakaway pedestal pole (20' cut as required).
8013	3 EA.	Furnish and install conduit bend in existing base.
8019	50 L.F.	Furnish and install 2" schedule 80 rigid PVC conduit-trenched.
8024	3 C.Y.	Furnish and install concrete for signal structure.
8025	610 L.F.	Furnish and install No. 6 AWG stranded bare copper ground wire.
8027	60 L.F.	Furnish and install 2" schedule 80 rigid PVC conduit - bored.
8030	230 L.F.	Furnish and install 2" schedule 80 rigid PVC conduit - slotted.
8035	3 EA.	Furnish and install electrical handhole.
8040	2 EA.	Furnish and install ground rod (3/4" dia. x 10' length).
8043	1220 L.F.	Furnish and install electrical cable 5 - Conductor (NO. 14 AWG).
NEG.	70 L.F.	Furnish and install 2" electrical conduit schedule 80 PVC - riser.
NEG.	1 EA.	Paint structure (installed).
NEG.	18 S.F.	Install overhead signs.
NEG.	25 L.F.	Furnish and install 24" white heat applied permanent preformed thermoplastic pavement marking.

REVISION "C"

STREET TRAFFIC STUDIES, LTD.
Gateway International
1302 Concourse Drive, Suite 104
Linthicum, Maryland 21090
Ph (410) 859-3553
Fax (410) 859-3579

TASK36gi. dgn

MARYLAND DOT - STATE HIGHWAY ADMINISTRATION
Office of Traffic & Safety
TRAFFIC ENGINEERING DESIGN DIVISION
MD 70 (BLADEN ST.) AND CALVERT ST.

DRAWN BY: E. MILESKY	COUNTY: ANNE ARUNDEL	TS NO. 900X2CGI	SHEET NO. 2 OF 2
CHECK BY: EMM.	LOG MILE: 0 2007 D 00.15		
DATE: 9-28-99	F.A.P. NO. N\A	T.I.M.S. NO. D509	
SCALE: 1"= 20'	S.H.A. NO. GT-1999-1		