NOTE: H = HEIGHT OF CURB

SIDEWALK RAMP DETAILS

SCALE: 1" = 10'

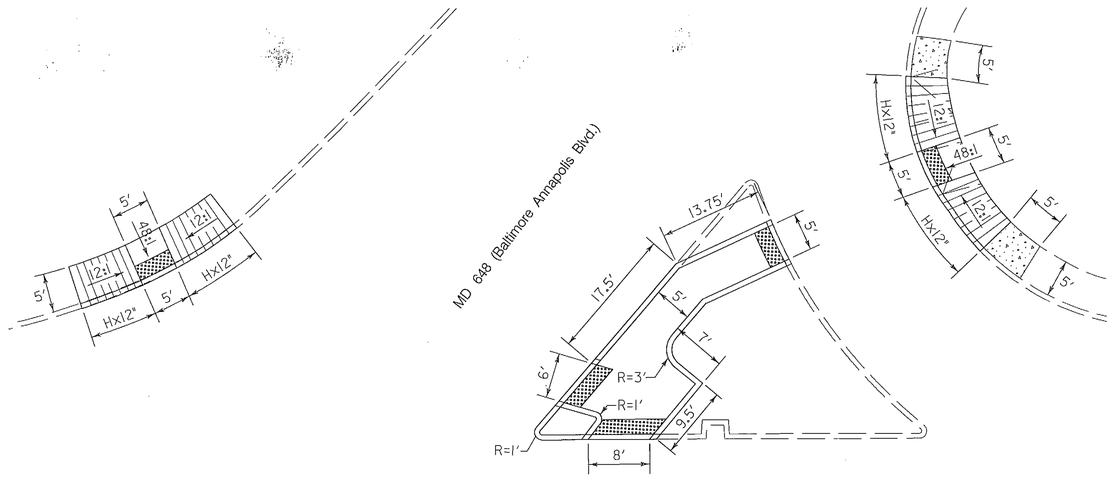

MD 2 (Ritchie Highway)

MD 2 (Ritchie Highway)

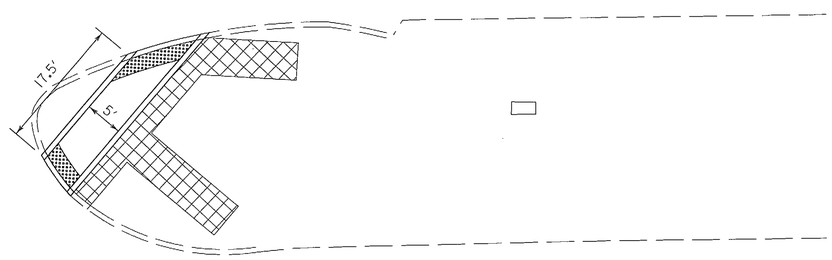

MD 2 (Ritchie Highway)

MD 2 (Ritchie Highway)

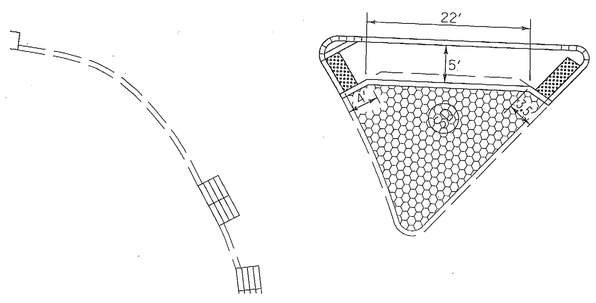

MD 648 (Baltimore Annapolis Blvd.)

MD 2 (Ritchie Highway)

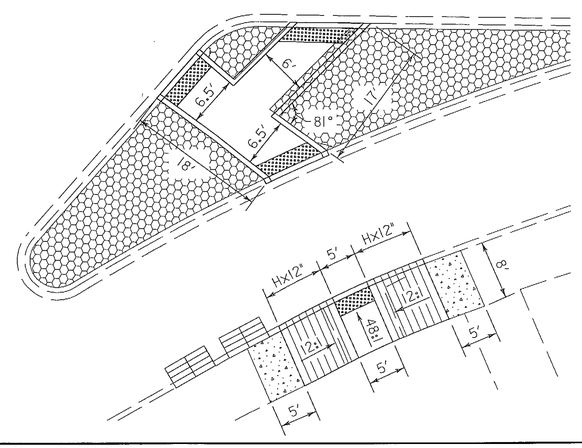

WIRING DIAGRAM

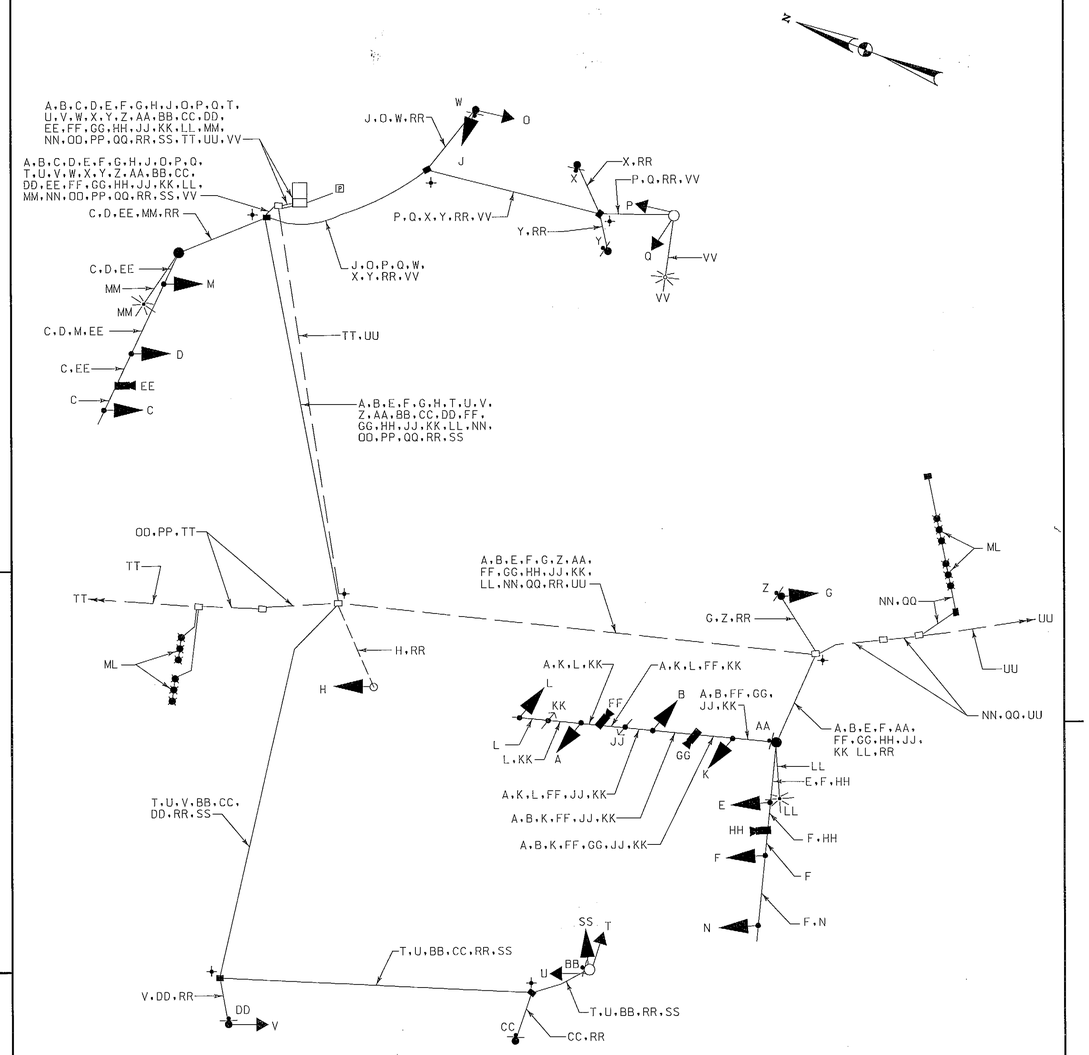

WIRING KEY

A B C D E F G H J SS	7-CONDUCTOR ELECTRICAL CABLE (NO. 14 A.W.G.)
K L M N O P Q T U V	5-CONDUCTOR ELECTRICAL CABLE (NO. 14 A.W.G.)
W X Y Z AA BB CC DD	2-CONDUCTOR ELECTRICAL CABLE (NO. 14 A.W.G.)
EE FF GG HH	VIDEO CAMERA DETECTION LEAD-IN CABLE
JJ KK	4-CONDUCTOR OPTICOM DETECTOR CABLE (NO. 14 A.W.G.)
LL MM VV	2-CONDUCTOR ELECTRICAL CABLE (NO. 12 A.W.G.) - TRAY CABLE
NN OO PP QQ	MICROLOOP PROBE LEAD-IN
RR	STRANDED BARE COPPER GROUND WIRE (NO. 6 A.W.G.)
TT UU	EXISTING INTERCONNECT CABLE
ML	MICROLOOP PROBE SET
⏚	3/4 IN. X 10 FT. GROUND ROD

STATE OF MARYLAND
DEPARTMENT OF TRANSPORTATION
STATE HIGHWAY ADMINISTRATION
OFFICE OF TRAFFIC & SAFETY
TRAFFIC ENGINEERING DESIGN DIVISION

MD 2 (Governor Ritchie Highway) and MD 648 (Baltimore Annapolis Blvd)

Glen Burnie, MD

GENERAL INFORMATION SHEET

SCALE AS SHOWN ADVERTISED DATE 9/28/2010 CONTRACT NO. XX3535168

DESIGNED BY	B. DONOWAY	COUNTY	Anne Arundel
DRAWN BY	B. DONOWAY	LOGMILE	02000229.91
CHECKED BY	N. LEARY	TIMS NO.	K591
F.A.P. NO.		TOD NO.	

TS NO. 791H	DRAWING TSP-3 OF 4	SHEET NO. 3 OF 4

WHITMAN, REQUARDT & ASSOCIATES, LLP
801 South Caroline Street, Baltimore, Maryland 21231

BY: sbloss

PLOTTED: 09-29-2010
FILE: N:\2669-081\CADD\pSG-N003_md648.dgn