US 29 IS ASSUMED TO RUN IN A NORTH-SOUTH DIRECTION

EXISTING SIGNS TO REMAIN

36a D-3(1) 84"X16" (DUAL FACE) — Colesville RD S-1309

36b D-3(1) 84"X16" (DUAL FACE) — Colesville RD S-1309

35 D-3(1) 96"X32" — Sligo Creek PKWY S-1302 / St. Andrews WAY S-1303

34 D-3(1) 96"X32" — Sligo Creek PKWY S-1302 / St. Andrews WAY S-1303

EXISTING SIGNS TO BE REMOVED

51,52,53,54,55,56 — PUSH BUTTON TO CROSS COLESVILLE RD; START CROSSING WHEN PEDESTRIAN SIGNAL IS GRANTED; DON'T START IF SIGNAL FLASHES; PEDESTRIANS MUST NOT BE IN CROSSWALK — 9"X12"

57 — 24"X30"

58,59 — 30"X30"

60,61 — 30"X30" 21"X15"

38 TRAVELERS ADVISORY 1070 AM — 36"X36"

39 LEFT TURN ARROW DOES NOT OPERATE — 30"X36"

40 LANE ENDS MERGE RIGHT — W9-2(4) 30"X42" FIBEROPTIC BLANKOUT MESSAGE SIGN

41 USE 2 RIGHT LANES 4-7 PM MON-FRI — R4-7(1) MOD 60"X24"

42 NO TURN ON RED — R10-11b 30"X30"

EXISTING SIGNS TO BE RELOCATED

50 RIGHT TURN ON RED AFTER STOP ONTO SLIGO CREEK PARKWAY — 60"X30"

PROPOSED SIGNS

46 W11-2 FY 36"X36" M6-2(1) FY 30"X24"

47 W11-2 FY 36"X36" M6-2(1) FY 30"X24"

43 R4-7 @ 15° 24"X30"

44,45 OM1-3 FY 18"X18"

48 W11-15 FY 36"X36" M6-2(1) FY 30"X24"

49 R1-2 30"X30"X30"

PROPOSED LED SIGNALS

14,17,18,21,22,23 — 16"

EXISTING LED SIGNALS TO REMAIN

1,2,4 — 12"

3,7,8 — 12"

5 — 12"

6,9,10,11,12,13 — 12"

15,16,19,20 — 16"

EXISTING SIGNALS TO BE REMOVED

14a,17a,18a,21a,22a,23a — 16"

a,b,c,d,e — PROPOSED IP-BASED VIDEO DETECTION

NEMA PHASING

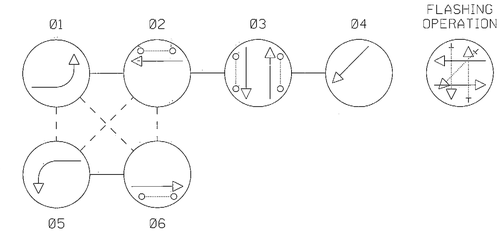

NOTE:
PHASES ASSOCIATED BY A DASHED LINE WILL OPERATE CONCURRENTLY.
PHASES ASSOCIATED BY A SOLID LINE WILL NOT OPERATE CONCURRENTLY.

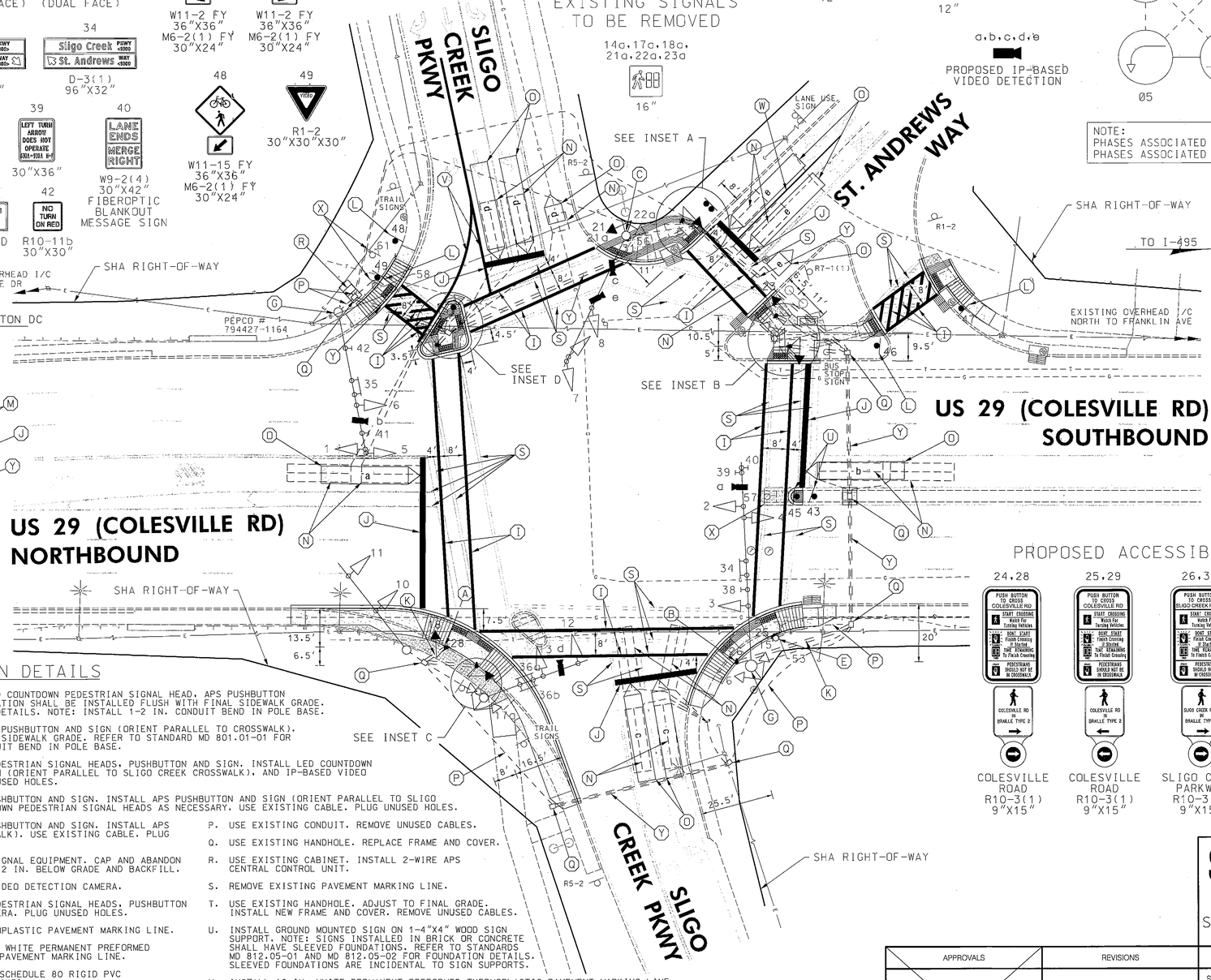

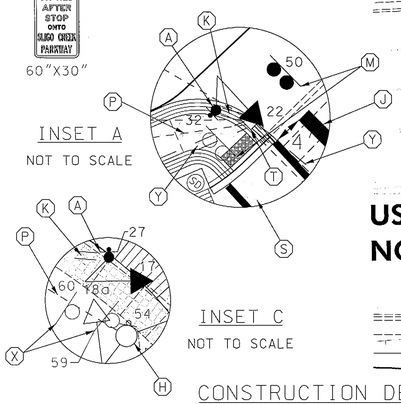

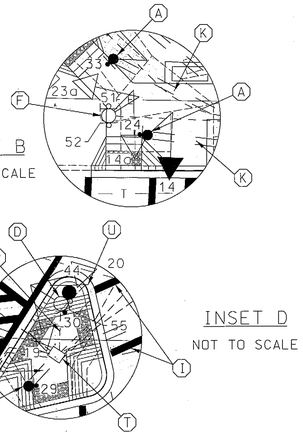

PROPOSED ACCESSIBLE PUSHBUTTONS AND SIGNS

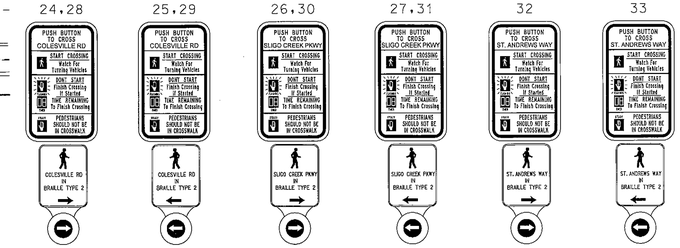

CONSTRUCTION DETAILS

A. INSTALL 10 FT. BREAKAWAY PEDESTAL POLE WITH LED COUNTDOWN PEDESTRIAN SIGNAL HEAD, APS PUSHBUTTON AND SIGN (ORIENT PARALLEL TO CROSSWALK). FOUNDATION SHALL BE INSTALLED FLUSH WITH FINAL SIDEWALK GRADE. REFER TO STANDARD MD 801.01-01 FOR FOUNDATION DETAILS. NOTE: INSTALL 1-2 IN. CONDUIT BEND IN POLE BASE.

B. INSTALL 5 FT. BREAKAWAY PEDESTAL POLE WITH APS PUSHBUTTON AND SIGN (ORIENT PARALLEL TO CROSSWALK). FOUNDATION SHALL BE INSTALLED FLUSH WITH FINAL SIDEWALK GRADE. REFER TO STANDARD MD 801.01-01 FOR FOUNDATION DETAILS. NOTE: INSTALL 1-2 IN. CONDUIT BEND IN POLE BASE.

C. USE EXISTING MAST ARM POLE. REMOVE EXISTING PEDESTRIAN SIGNAL HEADS, PUSHBUTTON AND SIGN. INSTALL LED COUNTDOWN PEDESTRIAN SIGNAL HEAD, APS PUSHBUTTON AND SIGN (ORIENT PARALLEL TO SLIGO CREEK CROSSWALK), AND IP-BASED VIDEO DETECTION CAMERAS. USE EXISTING CABLE. PLUG UNUSED HOLES.

D. USE EXISTING PEDESTAL POLE. REMOVE EXISTING PUSHBUTTON AND SIGN. INSTALL APS PUSHBUTTON AND SIGN (ORIENT PARALLEL TO SLIGO CREEK CROSSWALK). REORIENT EXISTING LED COUNTDOWN PEDESTRIAN SIGNAL HEADS AS NECESSARY. USE EXISTING CABLE. PLUG UNUSED HOLES.

E. USE EXISTING PEDESTAL POLE. REMOVE EXISTING PUSHBUTTON AND SIGN. INSTALL APS PUSHBUTTON AND SIGN (ORIENT PARALLEL TO CROSSWALK). USE EXISTING CABLE. PLUG UNUSED HOLES.

F. REMOVE EXISTING PEDESTAL POLE AND ASSOCIATED SIGNAL EQUIPMENT. CAP AND ABANDON EXISTING CONDUITS. REMOVE EXISTING FOUNDATION 12 IN. BELOW GRADE AND BACKFILL.

G. USE EXISTING MAST ARM POLE. INSTALL IP-BASED VIDEO DETECTION CAMERA.

H. USE EXISTING MAST ARM POLE. REMOVE EXISTING PEDESTRIAN SIGNAL HEADS, PUSHBUTTON AND SIGN. INSTALL IP-BASED VIDEO DETECTION CAMERA. PLUG UNUSED HOLES.

I. INSTALL 12 IN. WHITE PERMANENT PREFORMED THERMOPLASTIC PAVEMENT MARKING LINE.

J. INSTALL 24 IN. WHITE PERMANENT PREFORMED THERMOPLASTIC PAVEMENT MARKING LINE.

K. INSTALL 2 IN. SCHEDULE 80 RIGID PVC CONDUIT - TRENCHED.

L. INSTALL GROUND MOUNTED SIGN ON 1-4"X6" WOOD SIGN SUPPORT (DRILLED).

M. RELOCATE EXISTING GROUND MOUNTED SIGN ON 2-4"X4" WOOD SIGN SUPPORT.

N. ABANDON EXISTING LOOP DETECTOR.

O. PROPOSED VIDEO DETECTION ZONE.

P. USE EXISTING CONDUIT. REMOVE UNUSED CABLES.

Q. USE EXISTING HANDHOLE. REPLACE FRAME AND COVER.

R. USE EXISTING CABINET. INSTALL 2-WIRE APS CENTRAL CONTROL UNIT.

S. REMOVE EXISTING PAVEMENT MARKING LINE.

T. USE EXISTING HANDHOLE. ADJUST TO FINAL GRADE. INSTALL NEW FRAME AND COVER. REMOVE UNUSED CABLES.

U. INSTALL GROUND MOUNTED SIGN ON 1-4"X4" WOOD SIGN SUPPORT. NOTE: SIGNS INSTALLED IN BRICK OR CONCRETE SHALL HAVE SLEEVED FOUNDATIONS. REFER TO STANDARDS MD 812.05-01 AND MD 812.05-02 FOR FOUNDATION DETAILS. SLEEVED FOUNDATIONS ARE INCIDENTAL TO SIGN SUPPORTS.

V. INSTALL 10 IN. WHITE PERMANENT PREFORMED THERMOPLASTIC PAVEMENT MARKING LINE.

W. INSTALL 5 IN. WHITE PERMANENT PREFORMED THERMOPLASTIC PAVEMENT MARKING LINE.

X. REMOVE EXISTING GROUND MOUNTED SIGN AND SUPPORT(S).

Y. INSTALL 4 IN. SCHEDULE 80 RIGID PVC CONDUIT - SLOTTED.

GEOMETRIC LEGEND

EXISTING
PROPOSED

UTILITY LEGEND

SD — STORM DRAIN
G — GAS MAIN
W — WATER MAIN
S — SEWER MAIN
E — ELECTRIC CABLES
E — AERIAL CABLES
T — TELEPHONE CABLES
F — FIBER-OPTIC

BY: WFW

RK&K
Rummel, Klepper & Kahl, LLP
81 MOSHER STREET | BALTIMORE, MD 21217
PH: (410) 728-2900 FAX: (410) 728-3160
Engineers Construction Managers Planners Scientists
www.rkk.com

APPROVALS	
TEAM LEADER	ORIGINAL ON FILE
ASST. DIV. CHIEF	
DIVISION CHIEF	
OFFICE DIRECTOR	

REVISIONS			
D	INSTALL APS/CPS SHA NO. XY1515185 TMS NO. L740	03-2013	
C	INSTALL NEW MAST ARM POLE ON NE CORNER, NEW SIGN ON SW MAST ARM	09-2000	
CEI		BRK	TH

STATE OF MARYLAND
DEPARTMENT OF TRANSPORTATION
STATE HIGHWAY ADMINISTRATION
OFFICE OF TRAFFIC & SAFETY
TRAFFIC ENGINEERING DESIGN DIVISION

US 29 (COLESVILLE RD) AT SLIGO CREEK PKWY & ST. ANDREWS WAY
SILVER SPRING, MARYLAND

TRAFFIC SIGNAL PLAN

SCALE 1"=20' DATE _____ CONTRACT NO. _____

DESIGNED BY _____ COUNTY MONTGOMERY
DRAWN BY _____ LOGMILE 15002901.74
CHECKED BY _____ TIMS NO. _____
FAP NO. _____ TOD NO. _____

TS NO. 4040D | DRAWING SP-5 OF 6 | SHEET NO. 1 OF 3

PLOTTED: Wednesday, March 27, 2013 AT 02:56 PM
FILE: \\balsrv03\v2008\2008\08149_tcddes\Task 162_US 29 APS\CADD\pSG-0005_US29@SligoCreek.dgn