PROJECT DESCRIPTION

BORDER REV. DATE: Moneh127200007

GENERAL
THIS PROJECT INVOLVES THE RECONSTRUCTION OF THE TRAFFIC SIGNAL AT THE INTERSECTION OF MD 355 (FREDERICK AVENUE) AND SOUTH WESTLAND DRIVE IN MONTGOMERY COUNTY. IN ADDITION, ACCESSIBLE PUSHBUTTONS AND COUNTDOWN PEDESTRIAN SIGNALS WILL BE INSTALLED FOR THE NORTH, EAST AND WEST LEG PEDESTRIAN CROSSINGS.

MD 355 IS ASSUMED TO RUN IN A NORTH-SOUTH DIRECTION.

INTERSECTION OPERATION
THE INTERSECTION WILL OPERATE IN A NEMA SIX PHASE, SEMI-ACTUATED TRAFFIC MODE. THE EXISTING MAINLINE EXCLUSIVE/PERMISSIVE PHASING WILL REMAIN. THE EXISTING SIDE STREET SPLIT PHASING WILL REMAIN. THE EXISTING MAINLINE AND ALTERNATE SIDE STREET PEDESTRIAN PHASES WILL REMAIN.

CONTROLLER REQUIREMENTS
INSTALL A BASE MOUNTED CABINET FOUNDATION. THE CABINET ALONG WITH THE CONTROLLER, VIDEO DETECTION INTERFACE EQUIPMENT AND ALL AUXILARY EQUIPMENT SHALL BE DELIVERED TO THE MONTGOMERY COUNTY TECHNICAL CENTER FOR SET UP AND TESTING. CONTACT MR. KEITH LORD AT 301-279-1290 TO SCHEDULE DELIVERY.

APS WILL FUNCTION AS FOLLOWS:

FOR FREDERICK AVENUE

A. WHEN A PEDESTRIAN LOCATES AND PRESSES THE PUSHBUTTON FOR AN EXTENDED TIME, THE PUSHBUTTON MESSAGE WILL BE "WAIT TO CROSS FREDERICK AT SOUTH WESTLAND."

B. WHEN THE "WALK" PHASE BEGINS, THE MESSAGE WILL BE A RAPID TICK, WHICH WILL LAST FOR THE DURATION OF THE "WALK" PHASE.

FOR SOUTH WESTLAND DRIVE

A. WHEN A PEDESTRIAN LOCATES AND PRESSES THE PUSHBUTTON FOR AN EXTENDED TIME, THE PUSHBUTTON MESSAGE WILL BE "WAIT TO CROSS SOUTH WESTLAND AT FREDERICK."

B. WHEN THE "WALK" PHASE BEGINS, THE MESSAGE WILL BE A RAPID TICK, WHICH WILL LAST FOR THE DURATION OF THE "WALK" PHASE.

THE CONTACT PERSONS FOR DISTRICT #3 / OOTS/ MONT. CO. ARE AS FOLLOWS:

District #3

Mr. Jeff Wentz
Assistant District Engineer - Traffic
Phone: 301-513-7358

Mr. Augie Rebish
District Utility Engineer
Phone: 301-513-7350

Mr. Wayne Mowdy
Assistant District Engineer - Maintenance
Phone: 301-513-7304

Mr. Kevin Nowak
Assistant District Engineer - Construction
Phone: 301-513-7336

Office Of Traffic & Safety

Mr. Richard L. Daff Sr.
Chief, Traffic Operations Division
Phone: 410-787-7630

Mr. Robert Snyder
Assistant Division Chief, Traffic Operations
410-787-7630

Mr. Edward Rodenhizer
Team Leader Signal Operations
Phone: 410-787-7650

Mr. Eugene Bailey
Team Leader Sign Operations
410-787-7670

The Power Company Representative is:
Potomac Electric Power Company
8300 Old Marlboro Pike
Upper Marlboro, Maryland 20772
Phone: 301-961-5325

Montgomery County

Mr. Kamal Hamud
Montgomery County Traffic Engineering
Phone: 240-777-8761

Mr. Keith Lord
Montgomery County Signal Shop
Phone: 301-279-1290

WIRING DIAGRAM

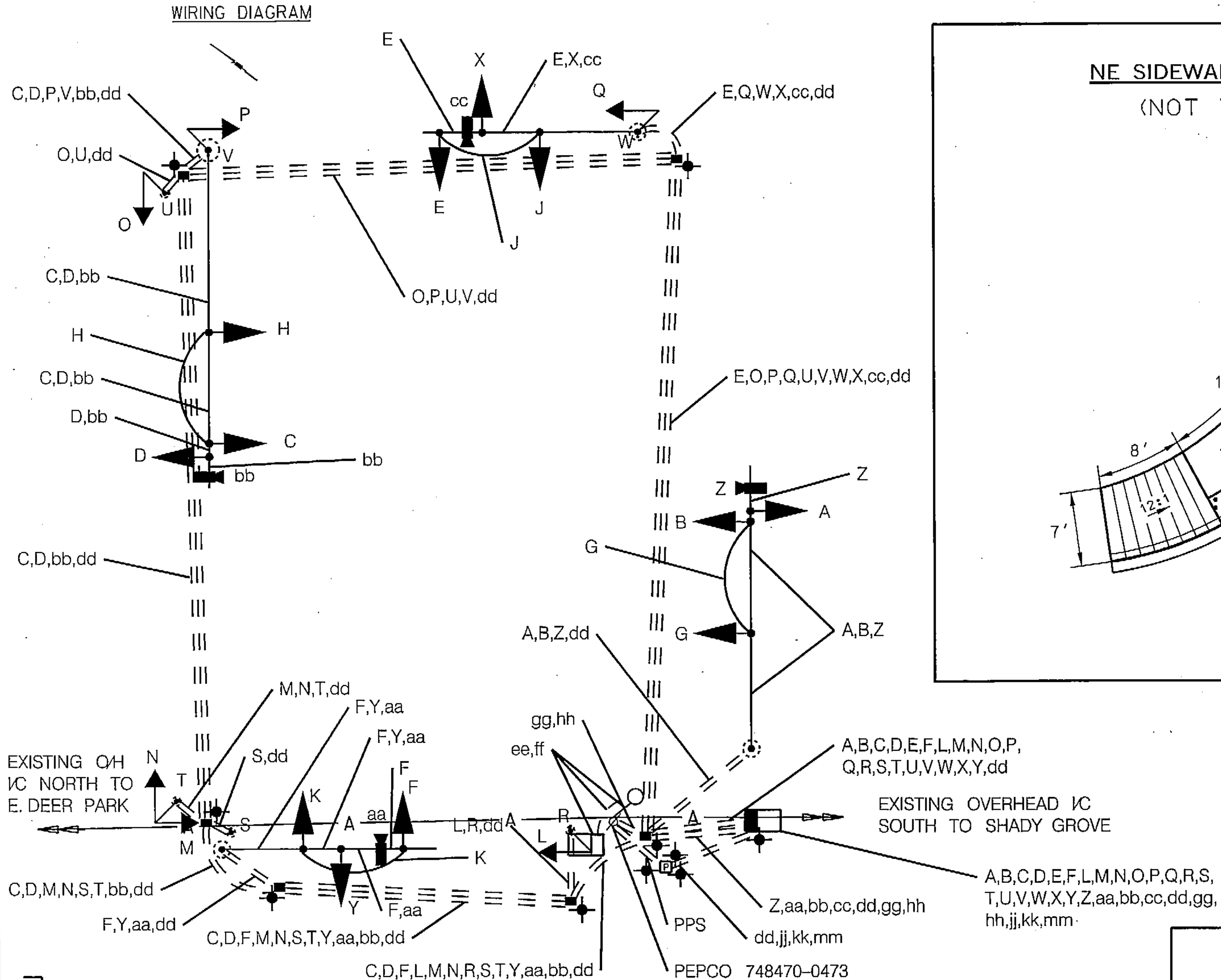

A B C D E F X Y - ELECTRICAL CABLE - 7 CONDUCTOR (NO. 14 AWG)

G H J K L M N O P Q - ELECTRICAL CABLE - 5 CONDUCTOR (NO. 14 AWG)

R S T U V W - ELECTRICAL CABLE - 2 CONDUCTOR (NO. 14 AWG)

Z aa - CONTROL CABLE - 250 FT. VIDEO DETECTION CAMERA TO CONTROLLER

bb cc - CONTROL CABLE - 500 FT. VIDEO DETECTION CAMERA TO CONTROLLER

dd - NO. 6 STRANDED BARE COPPER GROUND WIRE

ee - PULL BACK EXISTING INTERCONNECT CABLE NORTH TO E. DEER PARK ROAD

ff - PULL BACK EXISTING INTERCONNECT CABLE SOUTH TO SHADY GROVE ROAD

gg - RE-ROUTED EXISTING INTERCONNECT CABLE NORTH TO E. DEER PARK ROAD

hh - RE-ROUTED EXISTING INTERCONNECT CABLE NORTH TO SHADY GROVE ROAD

PPS - PROPOSED POWER SERVICE - ELECTRICAL CABLE I CONDUCTOR, 250 KCML, CU, USE

jj kk mm - PROPOSED POWER SERVICE FEED, ELECTRICAL CABLE - I CONDUCTOR, NO. 4 AWG

PROPOSED GROUND ROD - 3/4 IN. DIAMETER X 10 FOOT LENGTH

NE SIDEWALK RAMP DETAIL
(NOT TO SCALE)

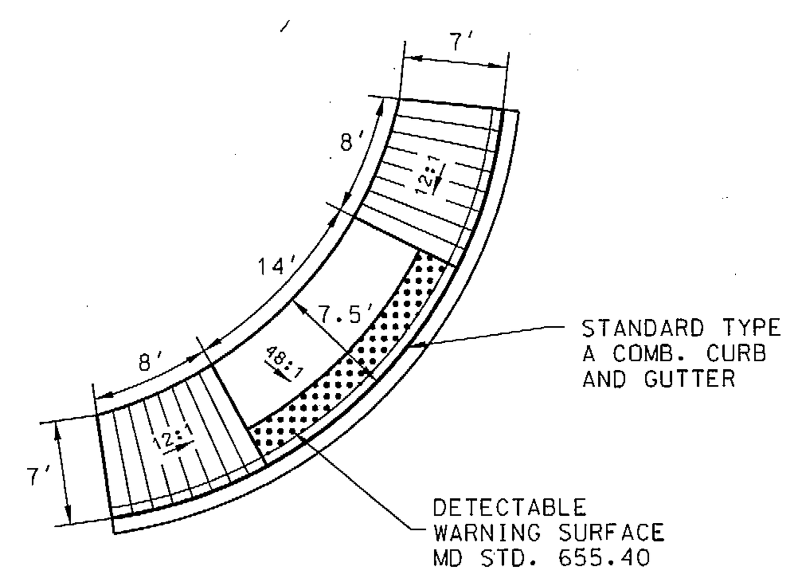

NW SIDEWALK RAMP DETAIL
(NOT TO SCALE)

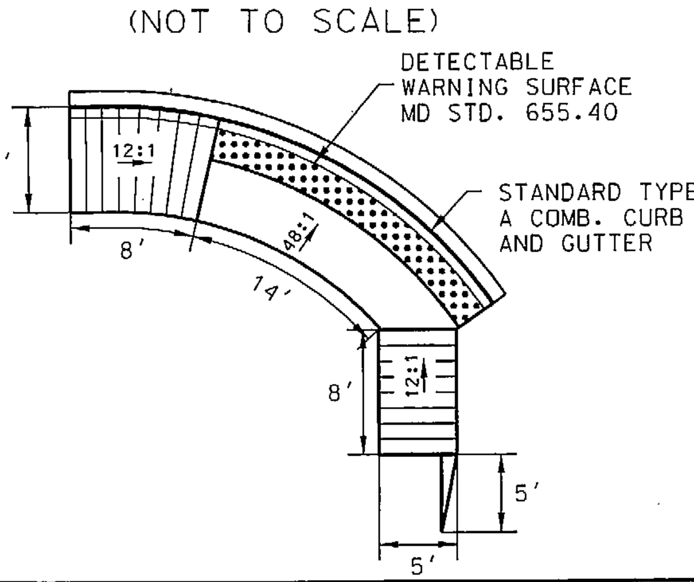

STV Incorporated
engineers /architects /planners /construction managers
7125 Ambassador Road Baltimore, MD 21244-2722 (410) 944-9112

BY: $USERNAME$

EQUIPMENT LIST 'A'

EQUIPMENT TO BE FURNISHED BY THE SHA.

ITEM NO.	QUANTITY	DESCRIPTION
9044	1 EA	[UPDATED] CONTROLLER CABINET, SIZE 6
9086	1 EA	[UPDATED] VIDEO DETECTION INTERFACE EQUIPMENT: 1-4 CAMERAS
9570	22 SF	[UPDATED] SHEET ALUMINUM GROUND MOUNTED SIGN
		1 EA - SHIELD ASSEMBLY (30 IN. x 51 IN.) "NORTH, MD 355, RIGHT ARROW"
		1 EA - SHIELD ASSEMBLY (30 IN. x 51 IN.) "SOUTH, MD 355, RIGHT ARROW"
9571	136 SF	[UPDATED] SHEET ALUMINUM MAST ARM / POLE MOUNTED SIGNS:
		1 EA - SHIELD ASSEMBLY (48 IN. x 75 IN.) "NORTH, MD 355, LEFT ARROW"
		1 EA - SHIELD ASSEMBLY (48 IN. x 75 IN.) "SOUTH, MD 355, LEFT ARROW"
		2 EA - R10-3(I) (9 IN. x 15 IN.) "PUSH BUTTON TO CROSS FREDERICK AVENUE"
		4 EA - R10-3(I) (9 IN. x 15 IN.) "PUSH BUTTON TO CROSS S. WESTLAND DR."
		2 EA - D-3(I) (96 IN. x 16 IN.) "FREDERICK AVE" DUAL FACED
		2 EA - D-3(I) (96 IN. x 16 IN.) "S. WESTLAND DR." DUAL FACED
		1 EA - R3-5(L) (30 IN. x 36 IN.)
		3 EA - R3-5(R) (30 IN. x 36 IN.)
		1 EA - R3-6(L) (30 IN. x 36 IN.)

EQUIPMENT LIST 'C'

EQUIPMENT TO BE REMOVED AND RETURNED TO SHA.

ITEM NO.	QUANTITY	DESCRIPTION

MONTGOMERY COUNTY FORCES SHALL REMOVE THE CONTROLLER AND ALL AUXILIARY EQUIPMENT FROM THE EXISTING CABINET.

EQUIPMENT LIST 'B'

EQUIPMENT TO BE FURNISHED AND INSTALLED BY THE CONTRACTOR.

ITEM NO.	QUANTITY	DESCRIPTION
1003	3 EA	MAINTENANCE OF TRAFFIC PER ASSIGNMENT
2002	5 CY	TEST PIT EXCAVATION
5004	500 LF	12 INCH HEAT APPLIED WHITE PERMANENT PREFORMED THERMOPLASTIC PAVEMENT MARKINGS
5005	180 LF	24 INCH HEAT APPLIED WHITE PERMANENT PREFORMED THERMOPLASTIC PAVEMENT MARKINGS
5006	80 LF	5 INCH HEAT APPLIED WHITE OR YELLOW PERMANENT PREFORMED THERMOPLASTIC PAVEMENT MARKINGS
5007	665 LF	REMOVAL OF EXISTING PERMANENT PAVEMENT LINE MARKINGS - ANY WIDTH
6001	115 LF	STANDARD TYPE A COMBINATION CURB AND GUTTER 12 INCH GUTTER PAN 8 INCH DEPTH
6002	750 SF	5 INCH CONCRETE SIDEWALK
6003	80 SF	DETECTABLE WARNING SURFACE FOR CURB RAMPS
8001	1 EA	2 WIRE CENTRAL CONTROL UNIT
8007	6 EA	AUDIBLE/TACTILE PEDESTRIAN PUSHBUTTON
8008	4 EA	BREAKAWAY PEDESTAL POLE (ANY SIZE)
8013	6 EA	LED 16 INCH COUNTDOWN PEDESTRIAN SIGNAL HEAD SECTION - POLE MOUNT
8015	2 EA	MAST ARM POLE & 38 FT MAST ARM ANY "T" DIMENSION
8016	1 EA	MAST ARM POLE & 60 FT MAST ARM ANY "T" DIMENSION
8018	1 EA	MAST ARM POLE & 50 FT MAST ARM ANY "T" DIMENSION
8021	1 EA	REMOVE & DISPOSE OF EQUIPMENT PER ASSIGNMENT
8025	4 EA	VIDEO DETECTION CAMERA & CABLE UP TO 500 FT
8029	100 LF	ELECTRICAL CABLE - 1 CONDUCTOR, 250 KCML, CU, USE
8030	115 LF	DISCONNECT, PULL-BACK & REROUTE CABLES
8032	850 LF	UP TO 4 INCH SCHEDULE 80 RIGID PVC ELECTRICAL CONDUIT - BORED
8034	185 LF	UP TO 4 INCH SCHEDULE 80 RIGID PVC ELECTRICAL CONDUIT - TRENCHED
8035	170 LF	WOOD SIGN SUPPORTS UP TO 4 x 6
8036	158 SF	INSTALL OVERHEAD OR GROUND MOUNTED SIGN
8038	610 LF	NO. 6 AWG STRANDED BARE COPPER GROUND WIRE
8041	1 EA	METERED SERVICE PEDESTAL EMBEDDED
8043	150 LF	ELECTRICAL CABLE 1-CONDUCTOR NO. 4 AWG-THHN/THWN
8045	6 EA	FURNISH AND INSTALL ELECTRICAL HANDHOLE
8049	15 LF	3 INCH DIAMETER POLYVINYL CHLORIDE CONDUIT, SCHEDULE 80, RISER
8050	48 EA	12 INCH LED VEHICULAR TRAFFIC SIGNAL HEAD SECTION
8054	975 LF	ELECTRICAL CABLE - 2 CONDUCTOR (NO. 14 AWG)
8056	1080 LF	ELECTRICAL CABLE - 5 CONDUCTOR (NO. 14 AWG)
8057	1500 LF	ELECTRICAL CABLE - 7 CONDUCTOR (NO. 14 AWG)
8065	1 EA	INSTALL CONTROLLER AND CABINET - BASE MOUNT

TOD NO:XX445-10
SHA NO:MO506A52/B52
MD 355@ SOUTH WESTLAND DR

PROPOSED SIGNAL EQUIPMENT LOCATIONS
AND MAST ARM LAYOUT DETAIL

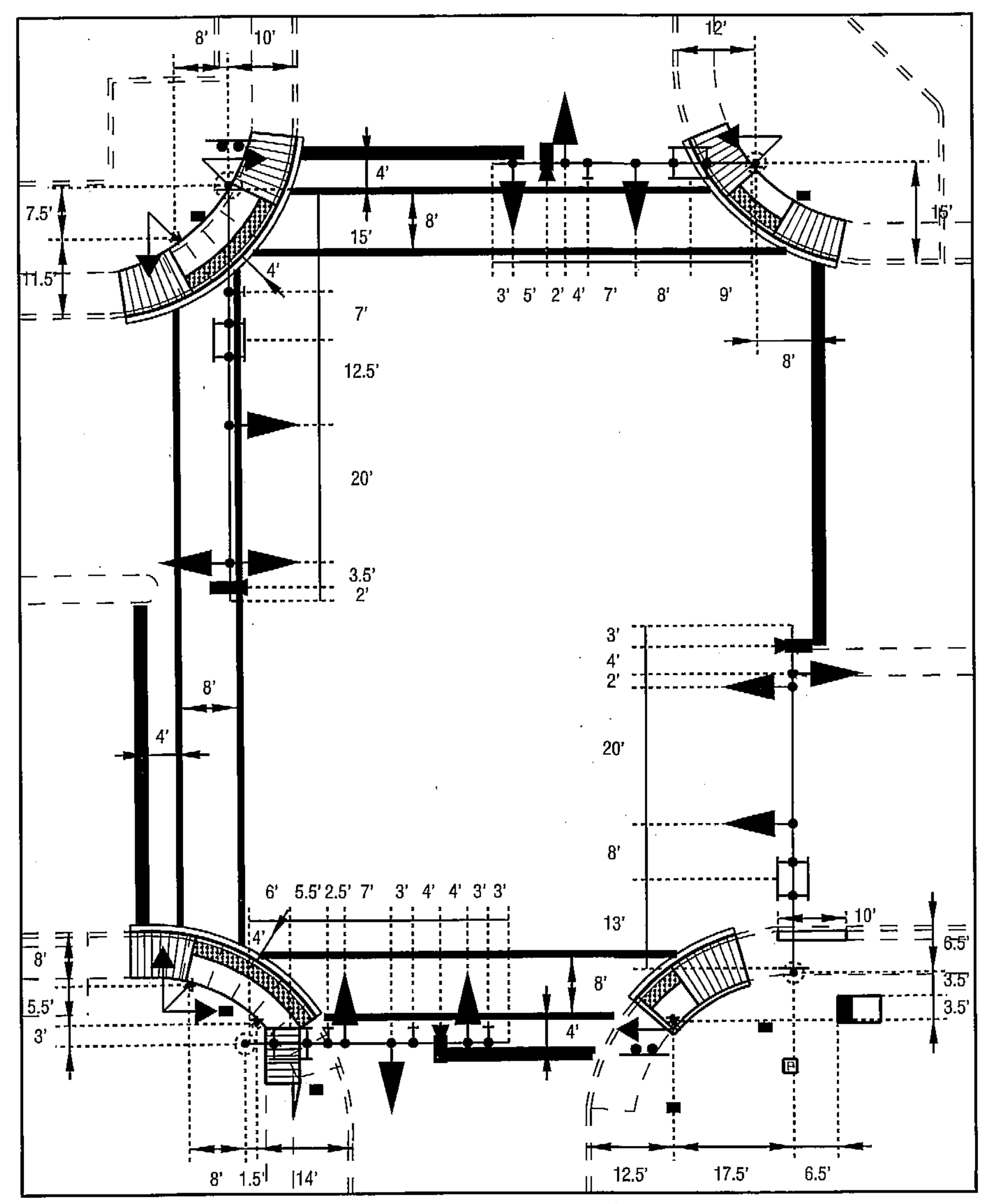

PHASE CHART	1	2	3	4	5	6	7	8	9	10	11	12	13	14	15	16	17	18
PHASE 1 AND 5	←G/R	←G/R	R	←G/R	←G/R	R	R	R	R	R	R	R	DW	DW	DW	DW	DW	DW
PHASE 1 AND 5 CHANGE TO 1 AND 6, 2 AND 5, OR 2 AND 6																		
PHASE 1 AND 6	R	R	R	←G/G	←G/G	G	R	R	R	R	R	R	W/K	DW	DW	W/K	DW	DW
PHASE 1 CHANGE	R	R	R	←Y/G	←Y/G	G	R	R	R	R	R	R	W/K	DW	DW	W/K	DW	DW
PHASE 2 AND 5	←G/G	←G/G	G	R	R	R	R	R	R	R	R	R	DW	W/K	W/K	DW	DW	DW
PHASE 5 CHANGE	←Y/G	←Y/G	G	R	R	R	R	R	R	R	R	R	DW	W/K	W/K	DW	DW	DW
PHASE 2 AND 6	G	G	G	G	G	G	R	R	R	R	R	R	W/K	W/K	W/K	W/K	DW	DW
PED CLEARANCE	G	G	G	G	G	G	R	R	R	R	R	R	FL/DW	FL/DW	FL/DW	FL/DW	DW	DW
PHASE 2 AND 6 CHANGE	Y	Y	Y	Y	Y	Y	R	R	R	R	R	R	DW	DW	DW	DW	DW	DW
PHASE 3	R	R	R	R	R	R	←G/G	←G/G	G	R	R	R	DW	DW	DW	DW	DW	DW
PHASE 3 CHANGE	R	R	R	R	R	R	Y	Y	Y	R	R	R	DW	DW	DW	DW	DW	DW
PHASE 4	R	R	R	R	R	R	R	R	R	←G/G	←G/G	G	DW	DW	DW	DW	DW	DW
PHASE 4 CHANGE	R	R	R	R	R	R	R	R	R	Y	Y	Y	DW	DW	DW	DW	DW	DW
PHASE 4 ALT.	R	R	R	R	R	R	R	R	R	←G/G	←G/G	G	DW	DW	DW	DW	W/K	W/K
PED CLEARANCE	R	R	R	R	R	R	R	R	R	←G/G	←G/G	G	DW	DW	DW	DW	FL/DW	FL/DW
PHASE 4 ALT. CHANGE	R	R	R	R	R	R	R	R	R	Y	Y	Y	DW	DW	DW	DW	DW	DW
FLASHING OPERATION	FL/Y	FL/Y	FL/Y	FL/Y	FL/Y	FL/Y	FL/R	FL/R	FL/R	FL/R	FL/R	FL/R	DARK	DARK	DARK	DARK	DARK	DARK

SHA
STATE OF MARYLAND
DEPARTMENT OF TRANSPORTATION
STATE HIGHWAY ADMINISTRATION
OFFICE OF TRAFFIC & SAFETY
TRAFFIC ENGINEERING DESIGN DIVISION

MD 355 (FREDERICK AVENUE) AT
SOUTH WESTLAND DRIVE

GENERAL INFORMATION

SCALE 1" = 20' ADVERTISED DATE 2/2009 CONTRACT NO. XX4455185

DESIGNED BY MCG COUNTY MONTGOMERY
DRAWN BY MCG LOGMILE 15035513.10
CHECKED BY BAB TIMS NO. 1676
F.A.P. NO. SEE TITLE SHEET TOD NO.

TS NO.1738C-GI DRAWING SG-02 OF 02 SHEET NO. 2 OF 2

PLOTTED: $DATETIME$
FILE: $FILE$

DRILL HOLES
DRILL HOLES
DRILL HOLES