WIRING DIAGRAM

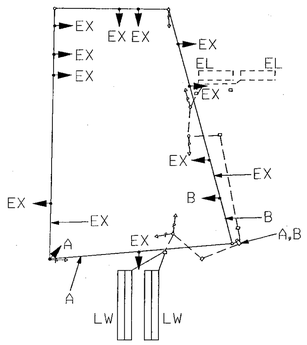

KEY

EX – USE EXISTING WIRING
A – 5 CONDUCTOR ELECTRICAL CABLE NO.14 AWG
B – 7 CONDUCTOR ELECTRICAL CABLE NO.14 AWG
EL – EXISTING LOOP
LW – PROPOSED LOOP WIRE

MD 355 IS ASSUMED TO RUN IN NORTH-SOUTH DIRECTION.

EXISTING SIGNS

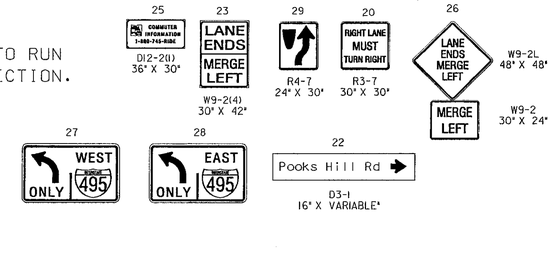

PROPOSED SIGNS

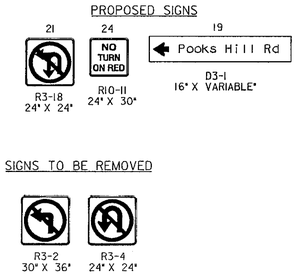

SIGNS TO BE REMOVED

EXISTING SIGNALS

PROPOSED SIGNALS

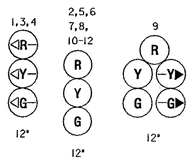

NEMA PHASING

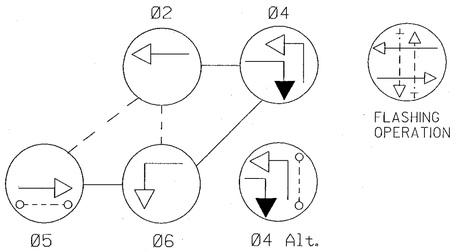

PHASES ASSOCIATED BY A DASHED LINE WILL OPERATE CONCURRENTLY
PHASES ASSOCIATED BY A SOLID LINE WILL NOT OPERATE CONCURRENTLY

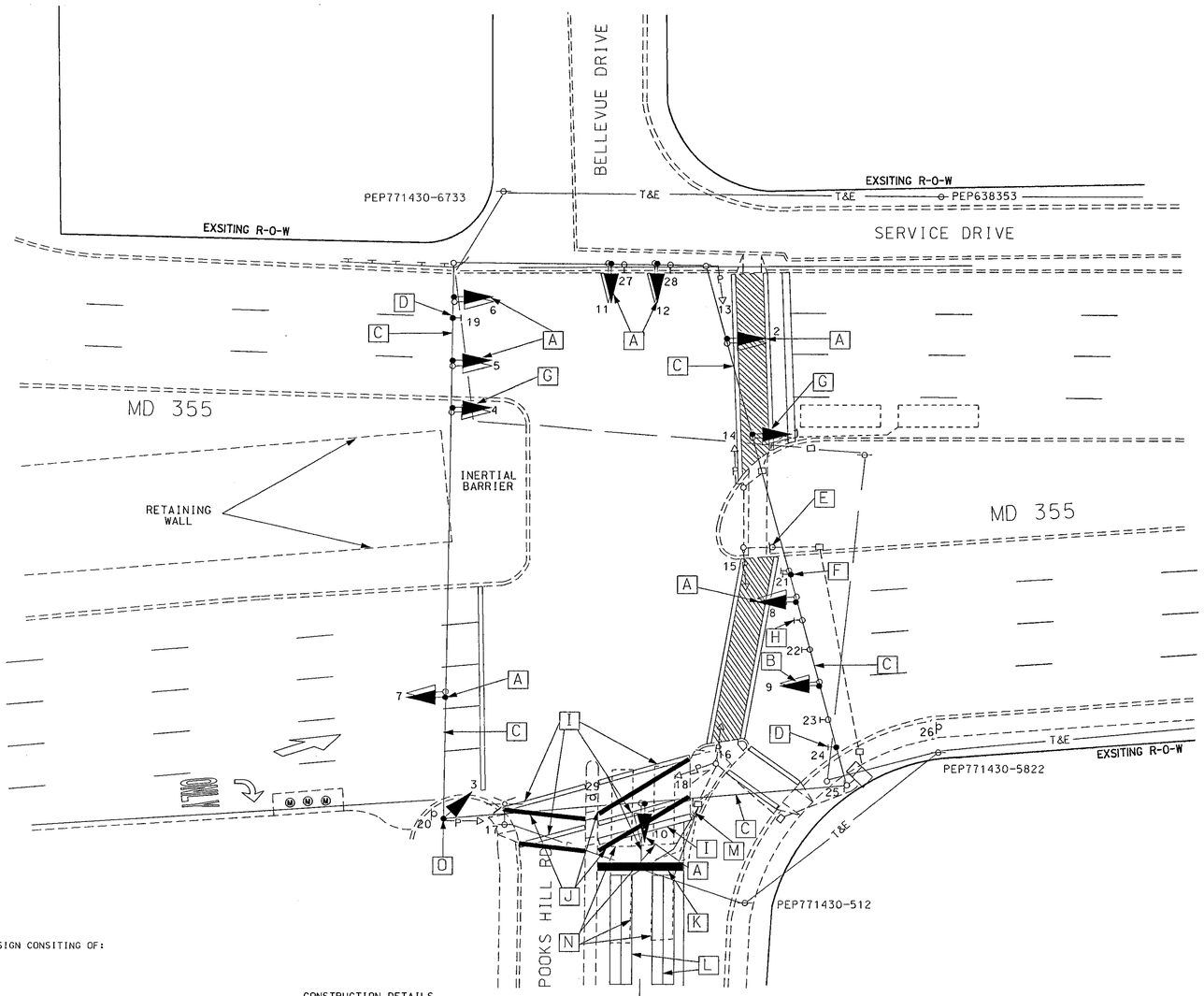

PROJECT DESCRIPTION

I. GENERAL

THIS PROJECT INVOLVES THE INSTALLATION OF A E/P RIGHT TURN ALONG SB MD 355. IN ADDITION, THE CROSSWALK ACROSS POOKS HILL RD WILL BE REALIGNED, AND ALL VEHICLE TRAFFIC SIGNAL HEADS WILL BE UPGRADED TO BLACK FACE.

II. OPERATION

THIS INTERSECTION IS EQUIPPED WITH A EIGHT PHASE CONTROLLER THAT WILL USE FOUR PHASES. MD 355 NB WILL HAVE AN EXCLUSIVE LEFT TURN LAG PHASE, WHILE SB MD 355 WILL HAVE AN E/P RIGHT TURN PHASE.

SPECIAL NOTES

1. THE FOLLOWING CONTACT PERSONS FOR DISTRICT # 3 ARE AS FOLLOWS:

PROJECT CONTACTS

MR. LEE STARKLOFF, ASSISTANT DISTRICT ENGINEER-TRAFFIC
PHONE: (301) 513-7318

MR. WAYNE MOWDY, ASSISTANT DISTRICT ENGINEER-MAINTENANCE
PHONE: (301) 513-7304

MR. AUGUSTINE REBISH, DISTRICT UTILITIES ENGINEER
PHONE: (301) 513-7350

MR. RICHARD DAFF, CHIEF OF TRAFFIC OPERATIONS DIVISON
PHONE: (410) 787-7630

MR. ROBERT SNYDER, ASSISTANT CHIEF OF TRAFFIC OPERATIONS DIVISON
PHONE: (410) 787-7631

MR. ED RODENHIZER, CHIEF OF SIGNAL SHOP
PHONE: (410) 787-7652

MR. ROBERT GONZALES, MONTGOMERY COUNTY TRAFFIC
PHONE: (240) 777-8761

2. MAINTENANCE OF TRAFFIC WILL BE HANDLED BY THE CONTRACTOR FOLLOWING THE STANDARD PLATES: 104.44-01, 104.45-01, 104.46-01, and 104.47-01.

GENERAL NOTES:

1. VEHICULAR SIGNAL INDICATIONS THAT ARE MOUNTED ON STRAIN POLES SHOULD BE MOUNTED ABOVE PEDESTIAN SIGNAL INDICATIONS AND A DISTANCE OF 12 TO 15 FEET ABOVE GRADE.

UTILITY LEGEND

G	GAS MAIN
W	WATER MAIN
S	SEWER MAIN
E	ELECTRIC CABLES
A	AERIAL CABLES
T	TELEPHONE CABLES

PHASE CHART

	1	2	3,4	5	6	7	8	9	10-12	13-16	17,18	
Phase 2 & 5	◀R-	G	◀R-	G	G	G	G	G	R	DW	WK	
Ped. Clear	◀R-	G	◀R-	G	G	G	G	G	R	DW	FL/DW	
2 & 5 Change	◀R-	G	◀R-	G	G	Y	Y	Y	R	DW	DW	
Phase 2 & 6	◀G-	G	◀G-	G	G	R	R	R	R	DW	DW	
2 & 6 Change	◀Y-	Y	◀Y-	Y	Y	R	R	R	R	DW	DW	
Phase 4	◀R-	R	◀R-	R	R	R	R	R-G▶	G	DW	DW	
4 Change	◀R-	R	◀R-	R	R	R	R	R-Y▶	Y	DW	DW	
Phase 4 Alt.	◀R-	R	◀R-	R	R	R	R	R-G▶	G	WK	DW	
Ped. Clear	◀R-	R	◀R-	R	R	R	R	R-G▶	G	FL/DW	DW	
4 Alt. Change	◀R-	R	◀R-	R	R	R	R	R-Y▶	Y	DW	DW	
Flashing Operation	FL/◀R-	FL/Y	FL/◀R-	FL/Y	FL/Y	FL/Y	FL/Y	FL/Y	FL/R	DARK	DARK	

SHEET: MD825A6A/B6A TOD#: AT28859

EQUIPMENT LIST

A. EQUIPMENT TO BE FURNISHED BY STATE HIGHWAY ADMINISTRATION

ITEM NO.	QUANTITY	DESCRIPTION
9572	20 SF	SHEET ALUMINUM SPAN MOUNTED SIGN CONSITING OF:
	1 EA	R10-11 SIGN, 24" X 30"
	1 EA	R3-18 SIGN, 24" X 24"
	1 EA	D3-2 SIGN, 16" X "VARIABLE"

B. EQUIPMENT TO BE FURNISHED AND/OR INSTALLED BY CONTRACTOR

ITEM NO.	QUANTITY	DESCRIPTION
1001	1 EA	MAINTENANCE OF TRAFFIC
5003	105 LF	F & I 12 INCH WHITE LEAD FREE REFLECTIVE THERMOPLASTIC PAVEMENT MARKINGS.
5004	25 LF	F & I 24 INCH WHITE LEAD FREE REFLECTIVE THERMOPLASTIC PAVEMENT MARKINGS.
5005	130 LF	REMOVAL OF EXISTING PAVEMENT MARKINGS - ANY WIDTH
8013	1 EA	REMOVE & DISPOSE OF EQUIPMENT (PER ASSIGNMENT)
8034	5 LF	F & I 1 INCH LIQUID TIGHT FLEXIBLE NON-METALLIC CONDUIT FOR DETECTOR SLEEVE.
8043	20 SF	INSTALL OVERHEAD SIGN
8053	38 EA	F & I 12 INCH VEHICULAR TRAFFIC SIGNAL HEAD SECTION-BLACK FACE
8058	175 LF	F & I ELECTRICAL CABLE-5 CONDUCTOR (NO. 14 AWG)
8059	70 LF	F & I ELECTRICAL CABLE-7 CONDUCTOR (NO. 14 AWG)
8060	460 LF	F & I LOOP WIRE ENCASED IN FLEXIBLE (NO.14 AWG)
8061	204 LF	F & I SAW CUT FOR SIGNAL (LOOP DETECTOR)

CONSTRUCTION DETAILS

A. REMOVE AND REPLACE SIGNAL HEAD WITH 12" 3-SECTION BLACK FACED TRAFFIC SIGNAL HEAD.
B. REMOVE AND REPLACE SIGNAL HEAD WITH 12" 5-SECTION BLACK FACED TRAFFIC SIGNAL HEAD (RT ARROWS).
C. USE EXISTING SPAN WIRE.
D. INSTALL SHEET ALUMINUM SPAN MOUNTED SIGN.
E. REMOVE GROUND MOUNTED SIGN.
F. REMOVE AND REPLACE SHEET ALUMINUM SPAN MOUNTED SIGN.
G. REMOVE AND REPLACE SIGNAL HEAD WITH 12" 3-SECTION BLACK FACED TRAFFIC SIGNAL HEAD (LT ARROWS).
H. REMOVE SPAN MOUNTED SIGN.
I. REMOVE EXISTING PAVEMENT MARKINGS.
J. INSTALL 12" THERMOPLASTIC PAVEMENT MARKINGS.
K. INSTALL 24" THERMOPLASTIC PAVEMENT MARKINGS.
L. INSTALL 6 FT. X 30 FT. VEHICLE LOOP DETECTOR (3-6-3) ENCASED IN A 1/4 INCH FLEXIBLE TUBING.
M. INSTALL A 1 INCH LIQUID TIGHT NON METALLIC FLEXIBLE CONDUIT FOR DETECTOR WIRE SLEEVE.
N. ABANDON EXISTING VEHICLE DETECTORS.
O. INSTALL 12" 3-SECTION BLACK FACED TRAFFIC SIGNAL HEAD 12 FT. ABOVE GRADE.

REVISIONS					
A	AS-BUILT INSTALL E/P RIGHT TURN FOR SB			05/2004	
	MD 355		TIMS G084		
CSW					

APPROVALS

ORIGINAL
TEAM LEADER, TRAFFIC ENGINEERING DESIGN DIVISION

ASST. CHIEF TRAFFIC ENGINEERING DESIGN DIVISION

ON
CHIEF, TRAFFIC ENGINEERING DESIGN DIVISION

FILE
DIRECTOR, TRAFFIC & SAFETY

MARYLAND DOT - STATE HIGHWAY ADMINISTRATION
Office of Traffic & Safety
TRAFFIC ENGINEERING DESIGN DIVISION

MD 355 (ROCKVILLE PIKE) & POOKS HILL RD

DRAWN BY: MVR	F.A.P. NO. XXX	TS NO. 4299A	SHEET NO.
CHECKED BY: WSW	S.H.A. NO. XXX		
SCALE: 1"=20'	COUNTY: MONTGOMERY	T.I.M.S. NO. G084	1 OF 1
DATE: MAY 17, 1976	LOG MILE: 15035503.83		